

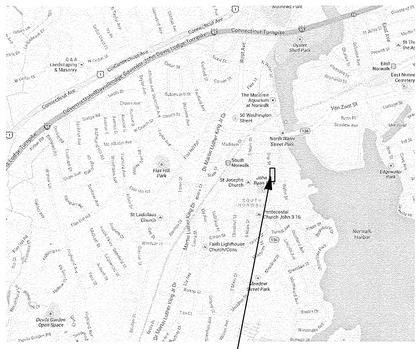

SITE

PROJECT TEAM:

OWNER/DEVELOPER:
TRINITY WASHINGTON VILLAGE LIMITED PARTNERSHIP
&
THE NORWALK HOUSING AUTHORITY

ARCHITECT:
ICON ARCHITECTURE, INC
101 SUMMER STREET, BOSTON, MA 02110
(617) 451-3333

CIVIL ENGINEER:
TIGHE & BOND
100 BRIDGEPORT AVENUE SUITE 320
SHELTON, CT, 06484
(203) 712-1100

GEOTECHNICAL ENGINEER:
MCPHAIL ASSOCIATES, LLC
30 NORFOLK STREET
CAMBRIDGE, MA, 02139
(617) 868-1420

MECHANICAL / FIRE PROTECTION, ELECTRICAL / TEL/DATA ENGINEER:
CENTEK ENGINEERING, INC
63-2 NORTH BRANFORD ROAD, BRANFORD, CT 06405
(203) 488-0580

STRUCTURAL ENGINEER:
GNCB CONSULTING ENGINEERS
130 ELM STREET, OLD SAYBROOK, CT, 06475
(860) 388-1224

LANDSCAPE ARCHITECT:
ERIC RAINS LANDSCAPE ARCHITECTURE
33 NORTH WATER STREET, SOUTH NORWALK, CT, 06854
(203) 853-7600

SURVEY ENGINEER:
WILLIAM SEYMOUR & ASSOCIATES, PC
170 NOROTON AVENUE, DARIEN, CT, 06820
(203) 655-3331

Washington Village PHASE 1

20 Day Street/ Parcel 2 / Building B

South Norwalk, CT

PERMIT / PRICING SET
SEPTEMBER 15, 2014

SYMBOLS

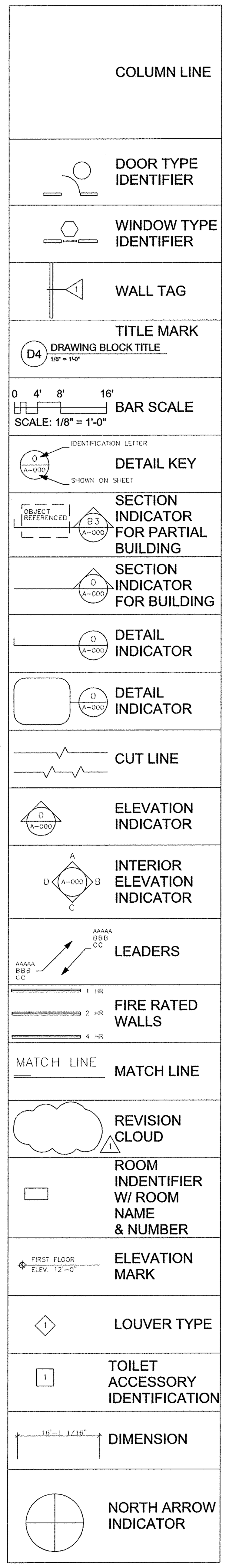

ABBREVIATIONS

L	Angle	JAN.	Janitor
CL.	Centerline	JAN. CLO.	Janitor Closet
O.	Diameter or Round	JT.	Joint
#	Pound or Number	KIT.	Kitchen
(E).	Existing	LAB.	Laboratory
ACT.	Acoustical Ceiling Tile	LAM.	Laminate
ACST.	Acoustic	LAV.	Lavatory
AD.	Area Drain	LKR.	Locker
ADJ.	Adjustable	LT.	Light
AGGR.	Aggregate	LT. GA.	Light Gage
ALUM.	Aluminum	MAX.	Maximum
APPROX.	Approximate	MC.	Medicine Cabinet
ARCH.	Architectural	MECH.	Mechanical
ASB.	Asbestos	MEMB.	Membrane
ASPH.	Asphalt	MTL.	Metal
AT.	Acoustical Tile	MFR.	Manufacturer
BD.	Board	MH.	Manhole
BITUM.	Bituminous	MIN.	Minimum
BLDG.	Building	MIRR.	Mirror
BLK.	Block	MISC.	Miscellaneous
BLKG.	Blocking	MO.	Masonry Opening
BM.	Beam	MR.	Moisture Resistant
B.O.	Bottom	MTD.	Mounted
BR.	Bedroom	MULL.	Mullion
CAB.	Cabinet	N.	North
CB.	Catch Basin	NIC.	Not In Contract
CBB.	Cementitious Backer Board	NO.	Number
CEM.	Cement	NOM.	Nominal
CG.	Corner Guard	NTS.	Not To Scale
CI.	Cast Iron	OA.	Overall
CLG.	Ceiling	OBS.	Obscure
q	Centerline	OC.	On Center
CLKG.	Caulking	OD.	Outside Diameter
CLO.	Closet	OD.	Outside Dimension
CLR.	Clear	OFF.	Office
CMU.	Concrete Block	OPNG.	Opening
CO.	Cased Opening	OPP.	Opposite
COL.	Column	PL.	Plate
CONC.	Concrete	PLAM.	Plastic Laminate
CONN.	Connect	PLAS.	Plaster
CONSTR.	Construction	PLYWD.	Plywood
CONT.	Continue	PNT.	Paint
CORR.	Corrugated	PR.	Pair
C.PT.	Carpet	PRCST.	Pre-cast
C.SK.	Countersunk	PT.	Point
C.TOP	Countertop	P.T.	Pressure Treated
CTR.	Center	PTD.	Paper Towel Dispenser
CT.	Ceramic Tile	PTDR.	Paper Towel Dispenser & Receptacle
DBL.	Double		
DEPT.	Department	PTN.	Partition
DET.	Detail	PTR.	Paper Towel Receptacle
DF.	Drinking Fountain	QT.	Quarry Tile
DIA.	Diameter	R.	Radius
DIM.	Dimension	R.	Riser
DISP.	Dispenser	R&S.	Clothes Rod & Shelf
DN.	Down	RD.	Roof Drain
DR. OPNG.	Door Opening	REF.	Reference
DR.	Door	REFRIG.	Refrigerator
DS.	Downspout	REG.	Register
DSP.	Dry Standpipe	REINF.	Reinforced
DWG.	Drawing	REQD.	Required
DWGS.	Drawings	RESIL.	Resilient
DWR.	Drawer	RRT.	Radial Rubber Tile
E.	East	RM.	Room
EA.	Each	RO.	Rough Opening
EJ.	Expansion Joint	RVS.	Reversed
EL.	Elevation	RWD.	Redwood
ELEC.	Electric	RWL.	Rain Water Leader
ELEV.	Elevator	S.	South
EMER.	Emergency	SC.	Solid Core
ENCL.	Enclosure	SCD.	Seat Cover Dispenser
EPB.	Electrical Panelboard	SCHED.	Schedule
EQ.	Equal	SD.	Soap Dispenser
EQUIP.	Equipment	SECT.	Section
EWC.	Electric Water Cooler	SH.	Shelf
EXIST.	Existing	SHR.	Shower
EXP.	Exposed	SHT.	Sheet
EXPAN.	Expansion	SIM.	Similar
EXT.	Exterior	SND.	Sanitary Napkin Dispenser
FA.	Fire Alarm	SNR.	Sanitary Napkin Receptacle
FB.	Flat Bar	SPEC.	Specification
FD.	Floor Drain	SQ.	Square
FDTN.	Foundation	SER. S.	Service Sink
FE.	Fire Extinguisher	SS.	Stainless Steel
FEC.	Fire Extinguisher Cabinet	STA.	Station
FHC.	Fire Hose Cabinet	STD.	Standard
FIN.	Finish	STL.	Steel
FL.	Flush	STOR.	Storage
FLASH.	Flashing	STRUCT.	Structural
FLR.	Floor	SUSP.	Suspended
FLG.	Flooring	SYMM.	Symmetrical
FLUOR.	Fluorescent	SV.	Sheet Vinyl
FOC.	Face of Concrete	T.	Tread
FOF.	Face of Finish	TB.	Towel Bar
FOS.	Face of Studs	TEL.	Telephone
FP.	Fireproof	TER.	Terrazzo
FR.	Frame	T&G.	Tongue and Groove
FR.	Fire Rated	THK.	Thickness
FS.	Full Size	TMPD.	Tempered
FT.	Foot or Feet	TOC.	Top of Curb
FTG.	Footing F	TOP.	Top of Pavement
FURG.	urring	TOW.	Top of Wall
FUT.	Future	TPD.	Toilet Paper Dispenser
G.	Ground	TV.	Television
GA.	Gage	TYP.	Typical
GALV.	Galvanized	UNFIN.	Unfinished
GB.	Grab Bar	UON.	Unless Otherwise Noted
GL.	Glass	UR.	Urinal
GR.	Grade	V.	Vinyl
GWB.	Gypsum Wall Board	VB.	Vinyl Base
GYB.	Gypsum	VEP.	Vitreous Enamel Paint
HB.	Hose Bibb	VERT.	Vertical
HC.	Hollow Core	VEST.	Vestibule
HDW.	Hardware	W.	West
HDWD.	Hardwood	W/	With
HM.	Hollow Metal	WC.	Water Closet
HORIZ.	Horizontal	WD.	Wood
HR.	Hour	WGL.	Wired Glass
HT.	Height	W/O	Without
ID.	Inside Diameter	WP.	Waterproof
INSUL.	Insulation	WSCT.	Wainscot
INT.	Interior	WT.	Weight

BUILDING B DRAWING LIST

G-001 COVER SHEET
G-002 ABBREVIATIONS, SYMBOLS & DRAWING LIST
G-003 PROJECT DATA
G-004 CODE REVIEW- BUILDING B
G-005 LIMIT OF WORK
G-006 OFF-SITE INTRIM PARKING

EX-1 EXISTING CONDITIONS SURVEY
EX-2 EXISTING CONDITIONS SURVEY
EX-3 EXISTING CONDITIONS SURVEY

DEMOLITION - COMMUNITY CENTER:
D-001 DEDUCT/ALTERNATE INTERIM PARKING

DEMOLITION - EXISTING CONDITIONS FOR REFERENCE ONLY:
A-1 BOILER ROOM PLAN
A-2 BOILER ROOM MEZZANINE
ST-1 SITE PLAN-NEW BOILER ROOMS
ST-2 SITE PLAN-EXIST./NEW-GAS/WATER PIPES
ST-3 SITE PLAN-EXIST. STEAM PIPES
P-1R PIPING DIAGRAM-STEAM BOILER/HOT WATER HEATER BOILER MODEL NO. V-906A
P-2R MINIMUM PIPING RECOMMENDATIONS- SINGLE/STEAM/ISOMETRIC BOILER MODEL NO. V-906A
P-3R PIPING DIAGRAM-PRESSURE OPERATED PUMPLESS CONDENSATE VAC CONDITIONS
A-1 SITE PLAN - SPECIFICATION
A-3 ELEVATIONS
E-M MECHANICAL/ELECTRICAL WORK
XX INDEX OF DRAWINGS - MAY, 2002
DME-1 MECHANICAL ROOM AND MEZZANINE DEMOLITION PLAN
SU-1 SITE PLAN-EXIST./NEW-GAS AND WATER PIPES
SU-2 SITE PLAN-EXIST.-STEAM PIPES
1 SITE IMPROVEMENTS-TITLE SHEET
2 EXISTING CONDITIONS-PERIMETER FENCE AND LANDSCAPING
4 ENLARGED PLAN-UNITS C-3/A-6 & UNITS C-4/B-5
H-317 UNDERGROUND CONDUIT ARRANGEMENT PLAN & DETAILS
H-318 SITE PLAN-UNDERGROUND STEAM & HOT WATER PIPING
H-319 DETAILS OF UNDERGROUND STEAM & HOT WATER PIPING
P2 UNDERGROUND CONDUIT ARRMT. PLAN & DETAILS
A-20 WINDOW DETAILS
A-22 F.S. DETAILS CORNICE & DOOR HOODS
S-107 COMMUNITY HOUSE AND BOILER ROOM

GEOTECHNICAL:
GT1.1 PASSIVE SUB SLAB VENTILATION SYSTEM BUILDING B
GT2.0 FOUNDATION DRAINAGE SYSTEM LAYOUT AND DETAIL BUILDING B

CIVIL:
C1.1 SITE STORM AND SANITARY SEWER PLAN
C2.1 SITE UTILITY PLAN
C3.1 SITE SOIL EROSION AND SEDIMENT CONTROL PLAN
C3.2 SOIL EROSION AND SEDIMENT CONTROL NARRATIVE AND DETAILS
C4.1 STORM DRAINAGE DETAILS
C4.2 STORM AND SANITARY DETAILS
C4.3 INFILTRATION SYSTEM DETAILS
C4.4 UTILITY DETAILS
C4.5 WATER SERVICE DETAILS

LANDSCAPE:
L-1.0 SITE PLAN
L-2.0 GRADING PLAN
L-3.0 PLANTING PLAN
L-4.0 LIGHTING PLAN
L-5.0 DETAILS
L-5.1 DETAILS
L-5.2 DETAILS

ARCHITECTURAL:
A-001 BUILDING B KEY PLANS
A-101 BUILDING B GROUND LEVEL PLAN (SOUTH WING)
A-102 BUILDING B GROUND LEVEL PLAN (NORTH WING)
A-103 BUILDING B FIRST FLOOR PLAN (SOUTH WING)
A-104 BUILDING B FIRST FLOOR PLAN (NORTH WING)
A-105 BUILDING B SECOND FLOOR PLAN (SOUTH WING)
A-106 BUILDING B SECOND FLOOR PLAN (NORTH WING)
A-107 BUILDING B THIRD FLOOR PLAN (SOUTH WING)
A-108 BUILDING B THIRD FLOOR PLAN (NORTH WING)
A-109 BUILDING B FOURTH FLOOR PLAN (SOUTH WING)
A-110 BUILDING B ROOF PLAN (NORTH WING)
A-111 BUILDING B ROOF PLAN (SOUTH WING)
A-201 BUILDING B ELEVATIONS
A-202 BUILDING B DAY STREET ELEVATION
A-203 BUILDING B REAR ELEVATION
A-204 BUILDING B RAYMOND AND HANFORD PLACE ELEVATION
A-205 BUILDING B ENTRY ELEVATION
A-301 BUILDING B SECTION
A-302 COMPARTMENT-ALIZATION PLAN
A-401 WALL SECTIONS, BUILDING B
A-402 WALL SECTIONS, BUILDING B
A-403 WALL SECTIONS, BUILDING B
A-404 WALL SECTIONS, BUILDING B
A-405 WALL SECTIONS, BUILDING B
A-406 WALL SECTIONS, BUILDING B
A-407 WALL SECTIONS, BUILDING B
A-408 WALL SECTIONS, BUILDING B
A-409 WALL SECTIONS, BUILDING B
A-410 WALL SECTIONS, BUILDING B
A-411 WALL SECTIONS, BUILDING B
A-501 TYPICAL UNIT PLANS BUILDING B
A-502 TYPICAL UNIT PLANS BUILDING B
A-503 TYPICAL UNIT PLANS BUILDING B
A-504 TYPICAL UNIT PLANS BUILDING B
A-505 TYPICAL UNIT PLANS BUILDING B
A-506 TYPICAL UNIT PLANS BUILDING B
A-507 TYPICAL UNIT PLANS BUILDING B
A-508 KITCHEN ENLARGED PLANS & ELEVATIONS
A-509 KITCHEN DETAILS, ENLARGED PLANS & ELEVATIONS
A-510 BATH ENLARGED PLANS & ELEVATIONS
A-511 BATH ENLARGED PLANS & ELEVATIONS
A-512 COMMON AREA BATH PLANS & ELEVATIONS
A-513 COMMON AREA BATH PLANS & ELEVATIONS
A-514 BATH DETAILS
A-515 BATH DETAILS
A-516 ENLARGED COMMON SPACE PLAN
A-517 REFLECTED CEILING PLAN - LOBBY AND CLUBROOM
A-518 REFLECTED CEILING PLANS - TYPICAL CORRIDOR
A-519 ROOF DECK ENLARGED PLAN
A-520 INTERIOR ELEVATIONS
A-521 INTERIOR ELEVATIONS
A-522 INTERIOR ELEVATIONS
A-523 INTERIOR ELEVATOINS
A-524 INTERIOR ELEVATIONS
A-601 BLDG B STAIR #1 & ELEVATOR #1 PLANS & SECTIONS
A-602 BLDG B STAIR #2 PLANS & SECTIONS
A-603 BLDG B STAIR #4 & ELEVATOR #2 PLANS AND SECTIONS
A-604 BLDG B STAIR #3 PLANS AND SECTIONS
A-605 COMMON STAIR DETAILS
A-606 TOWNHOUSE INT. UNIT STAIRS PLANS, SECTIONS & DETAILS
A-607 TRASH CHUTE PLANS & SECTION
A-608 EXTERIOR STAIRS
A-701 SECTION DETAILS (LOWER)
A-702 SECTION DETAILS (MID)
A-703 SECTION DETAILS (UPPER)
A-704 ROOF DETAILS
A-705 BAY DETAILS
A-706 PLAN DETAILS
A-707 GARAGE SCREEN DETAILS
A-708 GARAGE DETAILS
A-709 ROOF DECK DETAILS
A-710 COOLING TOWER DETAILS
A-711 TYP. SEALING DETAILS
A-712 TYP. SEALING DETAILS
A-801 WINDOW, SCREEN & CAST STONE SCHEDULE
A-802 WINDOW DETAILS
A-803 WINDOW FLASHING PROCEDURE
A-804 DOOR SCHEDULE
A-805 INTERIOR DOOR DETAILS
A-806 EXTERIOR DOOR DETAILS
A-807 EXTERIOR DOOR DETAILS AT DUPLEX UNITS
A-808 STOREFRONT, SCREEN & LOUVER SCHEDULE
A-809 STOREFRONT DETAILS
A-810 FINISH SCHEDULE
A-811 PARTITION TYPES
A-812 PARTITION DETAILS
A-813 PARTITION DETAILS
A-814 PARTITION DETAILS
A-815 PARTITION DETAILS

STRUCTURAL:
S-001 GENERAL NOTES
S-100A FOUNDATION PLAN
S-100B FOUNDATION PLAN
S-101A FIRST FLOOR FRAMING PLAN
S-101B FIRST FLOOR FRAMING PLAN
S-102A SECOND FLOOR FRAMING PLAN
S-102B SECOND FLOOR FRAMING PLAN
S-103A THIRD FLOOR FRAMING PLAN
S-103B THIRD FLOOR FRAMING PLAN
S-104A FOURTH FLOOR FRAMING PLAN
S-104B FOURTH FLOOR FRAMING PLAN
S-105A ROOF FRAMING PLAN
S-200 TYPICAL DETAILS
S-201 TYPICAL DETAILS
S-202 TYPICAL DETAILS
S-300 SECTIONS AND DETAILS
S-301 SECTIONS AND DETAILS
S-302 SECTIONS AND DETAILS
S-303 SECTIONS AND DETAILS
S-304 SECTIONS AND DETAILS
S-400 COLUMN SCHEDULE AND DETAILS

PLUMBING:
P-001 PLUMBING SCHEDULES LEGENDS & NOTES
P-101 BUILDING B GROUND LEVEL PLAN (NORTH WING)- PLUMBING
P-102 BUILDING B GROUND LEVEL PLAN (SOUTH WING)- PLUMBING
P-103 BUILDING B FIRST FLOOR PLAN (NORTH WING)- PLUMBING
P-104 BUILDING B FIRST FLOOR PLAN (SOUTH WING)- PLUMBING
P-105 BUILDING B SECOND FLOOR PLAN (NORTH WING)- PLUMBING
P-106 BUILDING B SECOND FLOOR PLAN (SOUTH WING)- PLUMBING
P-107 BUILDING B THIRD FLOOR PLAN (NORTH WING)- PLUMBING
P-108 BUILDING B THIRD FLOOR PLAN (SOUTH WING)- PLUMBING
P-109 BUILDING B FOURTH FLOOR PLAN (SOUTH WING)- PLUMBING
P-110 BUILDING B ROOF PLAN (NORTH WING)- PLUMBING
P-111 BUILDING B ROOF PLAN (SOUTH WING)- PLUMBING
P-201 TYPICAL UNIT PLANS BUILDING B- PLUMBING
P-202 TYPICAL UNIT PLANS BUILDING B- PLUMBING
P-203 TYPICAL UNIT PLANS BUILDING B- PLUMBING
P-204 TYPICAL UNIT PLANS BUILDING B- PLUMBING
P-301 PLUMBING DETAILS
P-302 PLUMBING DETAILS
P-303 PLUMBING DETAILS

FIRE PROTECTION:
FP-000 FIRE PROTECTION NOTES, SCHEDULES AND LEGENDS
FP-101 BUILDING B GROUND LEVEL PLAN (NORTH WING)- FIRE PROTECTION
FP-102 BUILDING B GROUND LEVEL PLAN (SOUTH WING)- FIRE PROTECTION
FP-103 BUILDING B FIRST FLOOR PLAN (NORTH WING)- FIRE PROTECTION
FP-104 BUILDING B FIRST FLOOR PLAN (SOUTH WING)- FIRE PROTECTION
FP-105 BUILDING B SECOND FLOOR PLAN (NORTH WING)- FIRE PROTECTION
FP-106 BUILDING B SECOND FLOOR PLAN (SOUTH WING)- FIRE PROTECTION
FP-107 BUILDING B THIRD FLOOR PLAN (NORTH WING)- FIRE PROTECTION
FP-108 BUILDING B THIRD FLOOR PLAN (SOUTH WING)- FIRE PROTECTION
FP-109 BUILDING B FOURTH FLOOR PLAN (SOUTH WING)- FIRE PROTECTION
FP-110 BUILDING B UPPER ROOF PLAN (SOUTH WING)- FIRE PROTECTION
FP-200 FIRE PROTECTION RISER DIAGRAM
FP-300 FIRE PROTECTION DETAILS
FP-301 FIRE PROTECTION DETAILS

MECHANICAL:
H-001 HVAC LEGEND AND SCHEDULES
H-002 HVAC SCHEDULES
H-101 BUILDING B GROUND LEVEL PLAN (NORTH WING)- HVAC
H-102 BUILDING B GROUND LEVEL PLAN (SOUTH WING)- HVAC
H-103 BUILDING B FIRST FLOOR PLAN (NORTH WING)- HVAC
H-104 BUILDING B FIRST FLOOR PLAN (SOUTH WING)- HVAC
H-105 BUILDING B SECOND FLOOR PLAN (NORTH WING)- HVAC
H-106 BUILDING B SECOND FLOOR PLAN (SOUTH WING)- HVAC
H-107 BUILDING B THIRD FLOOR PLAN (NORTH WING)- HVAC
H-108 BUILDING B THIRD FLOOR PLAN (SOUTH WING)- HVAC
H-109 BUILDING B FOURTH FLOOR PLAN (SOUTH WING)- HVAC
H-110 BUILDING B ROOF PLAN (NORTH WING)- HVAC
H-111 BUILDING B ROOF PLAN (SOUTH WING)- HVAC
H-201 TYPICAL UNIT PLANS BUILDING B - HVAC
H-202 TYPICAL UNIT PLANS BUILDING B - HVAC
H-203 TYPICAL UNIT PLANS BUILDING B - HVAC
H-204 TYPICAL UNIT PLANS BUILDING B - HVAC
H-301 HVAC RISER
H-302 HVAC RISER DIAGRAMS
H-303 HVAC RISER DIAGRAMS
H-304 DRYER EXHAUST RISER
H-401 HVAC DETAILS
H-402 HVAC DETAILS
H-403 HVAC DETAILS

ELECTRICAL:
E-001 ELECTRICAL LEGEND AND NOTES
E-002 ELECTRICAL GENERAL NOTES
E-003 ELECTRICAL SCHEDULES
E-100 SITE LOCATION PLAN- ELECTRICAL
E-101 BUILDING B GROUND LEVEL PLAN (NORTH WING)- ELECTRICAL
E-102 BUILDING B GROUND LEVEL PLAN (SOUTH WING)- ELECTRICAL
E-103 BUILDING B FIRST FLOOR PLAN (NORTH WING)- ELECTRICAL
E-104 BUILDING B FIRST FLOOR PLAN (SOUTH WING)- ELECTRICAL
E-105 BUILDING B SECOND FLOOR PLAN (NORTH WING)- ELECTRICAL
E-106 BUILDING B SECOND FLOOR PLAN (SOUTH WING)- ELECTRICAL
E-107 BUILDING B THIRD FLOOR PLAN (NORTH WING)- ELECTRICAL
E-108 BUILDING B THIRD FLOOR PLAN (SOUTH WING)- ELECTRICAL
E-109 BUILDING B FOURTH FLOOR PLAN (SOUTH WING)- ELECTRICAL
E-110 BUILDING B ROOF PLAN (NORTH WING)- ELECTRICAL
E-111 BUILDING B ROOF PLAN (SOUTH WING)- ELECTRICAL
E-201 TYPICAL UNIT PLANS BUILDING B - ELECTRICAL
E-202 TYPICAL UNIT PLANS BUILDING B - ELECTRICAL
E-203 TYPICAL UNIT PLANS BUILDING B - ELECTRICAL
E-204 TYPICAL UNIT PLANS BUILDING B - ELECTRICAL
E-205 TYPICAL UNIT PLANS BUILDING B - ELECTRICAL
E-206 TYPICAL UNIT PLANS BUILDING B - ELECTRICAL
E-207 TYPICAL UNIT PLANS BUILDING B - ELECTRICAL
E-208 TYPICAL UNIT PLANS BUILDING B - ELECTRICAL
E-209 BUILDING B- ELECTRICAL ROOM PART PLANS
E-301 BUILDING B ROOF PLAN (NORTH WING) - LIGHTING PROTECTION
E-302 BUILDING B ROOF PLAN (SOUTH WING) - LIGHTING PROTECTION
E-401 ELECTRICAL RISER DIAGRAM (BUILDING B)
E-402 ELECTRICAL RISER DIAGRAM (BUILDING B)
E-403 ELECTRICAL ONELINE DIAGRAM
E-404 TELEPHONE, CABLE AND LIGHTING PROTECTION RISER DIAGRAMS
E-405 ELECTRICAL FIRE ALARM RISER DIAGRAM
E-406 ELECTRICAL RISER DIAGRAMS
E-501 BUILDING B ELECTRICAL PANELBOARD SCHEDULES
E-601 ELECTRICAL DETAILS
E-602 ELECTRICAL DETAILS
E-603 ELECTRICAL DETAILS

Washington Village
Phase 1

20 Day Street
Building B

Norwalk, CT

Trinity Washington Village Limited Partnership
&
the Norwalk Housing Authority

ICON ARCHITECTURE
101 SUMMER ST BOSTON MA 02110
617-451-3333 www.iconarch.com

CONSULTANT

STAMP



MARK	DATE	DESCRIPTION
	09-15-2014	PERMIT/ PRICING
	06-13-2014	PRICING
	11-18-2013	40% CHFA
	09-19-2013	CAM/ SPECIAL PERMIT

PROJECT NO.: 21222
DRAWN BY: RA, KH, AF, SO, BD
CHECKED BY:

SHEET TITLE

ABBREVIATIONS, SYMBOLS & DRAWING LIST

G-002

9/19/2014 10:48 AM

UNIT MIX SUMMARY

		Unit Mix				
Phase 1		1BR	2 BR	3 BR	4 BR	Building Total
Parcel 1: 13 Day Street	Building A		3	3	4	10
Parcel 2: 20 Day Street	Building B	27	38	5		70
	Subtotal Phase 1	**27**	**41**	**8**		**80**
		34%	53%	9%	5%	100%

ZONING ANALYSIS

Parcel 2 (Building B) 20 Day Street 9/15/2014

	Dimensional Requirements	Required/Allowed by Zoning	Required	Proposed
Height	Maximum	5 stories & 60 ft above base flood level for multifamily & mixed use developments which provide a minimum of thirty percent (30%) affordable housing in accordance with Section 8-30g of the Connecticut General Statutes, provided that a minimum of ten percent (10%) the total number of units shall comply with §118-1050 Workforce Housing Regulation		4 Stories of Residential over Parking and 51.33' above Base Flood Level
Plot Size	Area	5,000 SF		56,130 SF
	Width	50'		Greater than 50'
Yards	Front	35 feet from centerline Subject to Sect 118-1000B; except for multifamily and mixed use developments which shall be located not more than ten (10) feet from property line, subject to 118-700 C.(6)	50% of the façade length shall be located within 10' of property line.	53% of Day Street; 100% of Hanford Place; 100% of Raymond Street
	Side	None for Multifamily Developments		~
	Aggregate Side	None for Multifamily Developments		~
	Rear	None for Multifamily Developments		~
	Maximum Building Area	None for Multifamily Developments		~
	Floor Area Ratio, Maximum	2.00 for Multifamily and mixed-use developments		94,249 Building B GSF/ 56,130 Plot Size SF= **1.68 FAR**
	Recreation Area per DU	150 SF per dwelling unit, may include balconies, courtyards, indoor recreational facilities, landscaped roofs and outdoor recreation areas	70 DU @ 150 Ea. = 10,500 SF	12,000± SF
	Residential Density	800 sq ft of lot area per dwelling unit for multifamily developments which provide a minimum of thirty percent (30%) affordable housing in accordance with Section 8-30g of the Connecticut General Statutes, provided that a minimum of ten percent (10%) the total number of units shall comply with §118-1050 Workforce Housing Regulation	56,130 Plot Size/ 800 SF per unit= **70 units**	70

Parcel 2 Parking	*29 Interim parking spaces for Parcel 2 will be located on Parcel 3.	**Required # of Spaces**	**Proposed # of Spaces**
1.5 Spaces per 1 Bedroom unit	27 units @ 1.5 Eas. = 41	41	41
2 Spaces per 2 Bedroom or larger	43 units @ 2 Ea. = 86	86	86
Total Parking Spaces		127	127

UNIT SIZE MATRIX

Washington Village Phase 1 Unit Matrix — ON architecture inc.

NSF UNIT SUMMARY

Building A

	1BR					2BR							3BR			4BR	
	A	B	C	D	F1	E	F2	G	J	M	A-FLAT	A-DUP	H	L	A-TH	A-TH	
											A108 1,069	A109 632 A110 638			A101 1572 A102 1569 A107 1602	A103 1,809 A104 1,810 A105 1,819 A106 1799	
Subtotal	0	0	0	0	0	0	0	0	0		1,069	1,270	0		4,743	7,237	**14,319**
Average					**0**							**780**			**1,581**	**1,809**	
Unit Count					**0**							**3**			**3**	**4**	**10**

Building B

	1BR					2BR								3BR			4BR	
	A	B	C	D	F	E	F	G	J	M	X	A-DUP	H	L	TH-K	A-TH		
	B105 768 B206 768 B306 768	B201 671 B221 730 B301 671 B324 324 B401 671	B316 880 B317 879 B318 880 B404 858 B405 858	B103 768 B109 754 B110 769 B113 1,005 B204 768 B210 771 B211 784 B214 787 B304 768 B310 770 B311 784 B314 783 B315 1,022	B217 884 B320 877	B101 1,006 B102 1,005 B104 1,005 B111 1,076 B112 1,076 B114 1,005 B202 1,006 B203 1,005 B205 1,005 B212 1,075 B213 1,075 B215 1,022 B218 1,024 B219 994 B220 973 B302 1,006 B303 1,005 B305 1,005 B312 1,075 B313 1,075 B321 1,024 B322 994 B323 973 B402 1,006 B407 1,006 B408 973 B409 973	B216 1,195 B319 1,194	B208 1,153 B308 1,153 B309 1,156	B108 1,156 B209 1,156 B307 1,167	B207 1,174	B403 970		B107 1,153	B106 1,250	B115 1,690 B116 1,690 B117 1,690		TOTAL UNIT NSF
Subtotal	2,304	3,067	4,355	10,533	1,761	27,467	2,389	3,462	3,479	1,174	970	0	1,153	1,250	7,473	0		70,837
Average					**786**							**1,052**			**1,495**	**0**		
Unit Count					**28**							**37**			**5**	**0**		**70**
Net SF					**22,020**							**38,941**			**14,619**	**7,237**		**85,156**
Total Unit Count					**28**							**40**			**8**	**4**		**80**
Average Unit Size					**786**							**974**			**1,827**	**1,809**		**1,064**
% of Total					**35.00%**							**50.00%**			**10.00%**	**5.00%**		100.00%
	1BR					2BR							3BR			4BR		

8/21/2014

BUILDING GROSS & NET SF

11-Sep-14

		Building GSF per Floor Level							Building Total (Not including parking)
		Parking Level	First Floor*	Second Floor	Third Floor	Fourth Floor*	Entry Level Access		
Parcel 1: 13 Day Street	Building A		6,049	5,959	5,013			Bldg GSF	17,021
								Bldg NET	15,615
Parcel 2: 20 Day Street	Building B	19,286	29,545	26,453	26,463	11,513	275	Bldg GSF	94,249
								Bldg NET	68,154
							Total Phase 1	**GSF***	**111,270**
								NET	**83,769**

* Includes Management and Amenity Space

Washington Village Phase 1

20 Day Street Building B

Norwalk, CT

Trinity Washington Village Limited Partnership
&
the Norwalk Housing Authority

E-ICON ARCHITECTURE
101 SUMMER ST BOSTON MA 02110
617-451-3333 www.iconarch.com

CONSULTANT

STAMP



MARK	DATE	DESCRIPTION
	09-15-2014	PERMIT/ PRICING
	06-13-2014	PRICING
	11-18-2013	40% CHFA
	09-19-2013	CAM/ SPECIAL PERMIT

PROJECT NO.: 21222
DRAWN BY: KH,GA,RA
CHECKED BY:

SHEET TITLE

PROJECT DATA

G-003

9/19/2014 3:28 PM

CODE REVIEW

PARCEL 2 - 20 DAY STREET - BUILDING B

Washington Village Phase 1

CODE REVIEW
Location: Norwalk, CT
Code: 2003 IBC Portion of the 2005
State Building Code State of Connecticut

Code Requirement	Mid-Rise – 5 stories
	Washington Village will be designed to the following: 2003 International Building Code Portion of the 2005 State Building Code State of Connecticut; ADA 2010; Fair Housing Act (FHA) 1991 (FHADM 1998 – FHA Design Guidelines); ICC/ANSI A117.1-2003 Accessible and Usable Buildings and Facilities Manual; 2009 International Energy Conservation Code; and applicable City and Zoning Regulations.
General Requirements	
Principle Use (Chapter 3, Sections 303-312):	Non-Separated Mixed Use Building R-2: Residential S-2: Parking Garage
Type of Construction (Chapter 6, Section 601):	**Group S-2:** Type IB, Non-combustible, Protected **Group R-2:** Type VA, Combustible, Protected
Use & Occupancy Separation Classification	**Chapter 3**
Occupancy Separation Requirements – Separated Uses (Section 302.3.2)	• Each portion of the building shall be individually classified as to use and shall be completely separated from adjacent areas by fire barrier walls or horizontal assemblies, or both having fire resistance rating in accordance with Table 302.3.2
Required Separation of Occupancies (Hours) (Table 302.3.2)	**Required:** R-2 & S-2 Separation: 2 hours *Exception:* *c. Areas used only for private or pleasure vehicles shall be allowed to reduce separation by 1 hour.* **Proposed:** 1 hour, per exception c in Table 302.3.2
General Building Height & Area	**Chapter 5**
General Height Limitation (Table 503) Automatic Sprinkler Increase (Section 504.2)	**Allowable:** R-2: 3 stories, 50 feet (3 stories + 1 story per Section 504.2) S-2: 11 stories, 160 feet **Proposed:** R-2: *4 Stories (70 feet) over grade level parking (See Section 508.4)* S-2: *1 Story*
Floor Area Limitation (Table 503) Automatic Sprinkler Increase (Section 506.3)	**Allowable:** R-2: 12,000 SF 39,480 SF allowed Section 506 Area Modifications (*See calculation in Section 506.1)* S-2: 79,000 ***Proposed:*** R-2: 24,256 SF S-2: 16,900 SF
Automatic Sprinkler System Height Increase (Section 504.2)	• Where a building is equipped throughout with an approved automatic sprinkler system in accordance with 903.3.1.1 (NFPA 13), the value specified in Table 503 for maximum height is increased by 20 feet, and maximum number of stories is increased by one story. • The increases are permitted in addition to the area increase in accordance with Sections 506.2 & 506.3. **Allowable:** R-2: 4 stories (*70 feet*) **Proposed:** R-2: 4 stories (40 feet) over grade level parking (*See Section 508.4*)
Area Modifications (Section 506.1)	Areas limited by Table 503 shall be permitted to be increased due to frontage (I_f) & automatic sprinkler system protection (I_s) in accordance with the following: $A_a = A_t + [A_t \times I_f/100] + [A_t \times I_s/100]$
	• A_a = Allowable area per floor (SF) • A_t = Tabular area per floor in accordance with Table 503 • I_f = Area increase due to frontage (%) as calculated in accordance with Section 506.2 • I_s = Area increase due to sprinkler protection (%) as calculated in accordance with Section 506.3 A_a = 12,000 = [12,000 x 29/100] + [12,000 x 200/100] **A_a = 39,480 SF**
Frontage Increase (Section 506.2)	Every building shall adjoin or have access to a public way to receive an area increase for frontage. Where a building has more than 25% of perimeter on a public way, the frontage increase shall be determined in accordance with the following: $I_f = 100[F/P - 0.25] \times W/30$ • I_f = Area increase due to frontage • F = Building perimeter which fronts on a public way or open space have 20 feet open minimum width (feet) • P = Perimeter of entire building (feet) • W = Width of public way or open space in accordance with Section 506.2.1 I_f = 100[531/100 – 0.25] x 34/30 I_f = 100[0.26] x 1.13 **I_f = 29**
Automatic Sprinkler System Area Increase (Section 506.3)	Where a building is equipped throughout with an approved automatic sprinkler system in accordance with Section 903.3.1.1 (NFPA 13), the area limitation in Table 503 is permitted to be increased by an additional 200% (I_s = 200%) for multi-story buildings. *Note: The increase is permitted in addition to the height & story increase in accordance with Section 504.2.*
Parking beneath Group R (Section 508.4)	• Where a maximum one story above grade plane Group S-2 parking garage, enclosed or open, or combination thereof, of Type 1 construction, with grade entrance, is provided under a building of Group R, the number of stories to be used in determining the minimum type of construction shall be measured from the floor above such parking area. • The floor assembly between the parking garage & Group R above shall comply with the type of construction required for the parking garage, and shall provide a fire-resistance rating not less than the mixed occupancy separation required in Section 302.3.2.
Construction Types	**Chapter 6**
Fire Rating of Elements (Table 601):	R-2, and S-2 Occupancies
Primary Structural Frame, including columns	R-2: 1 hour S-2: 2 hours (*See Note b*) *Note b: Fire resistance ratings of structural frame and bearing walls are permitted to be reduced by 1 hour where supporting a roof only.*
Exterior Walls: Load Bearing (Table 601)	R-2: 1 hour S-2: 2 hours, but not less than fire-resistance rating based on fire separation distance (*See Table 602*)
Exterior Walls: Non-Bearing <5 feet separation (Table 602)	1 hour
Exterior Walls: Non-Bearing >5 feet < to 10 feet separation (Table 602)	1 hour
Exterior Walls: Non-Bearing ≥ 10 feet < to 30 feet separation	1 hour

(Table 602)	
Interior Walls: Load Bearing	R-2: 1 hour S-2: 2 hours, but not less than elements they support (*See Note b*)
Interior Walls: Load-Bearing, supporting roof only)	S-2: 1 hour per Note b *Note b: Fire resistance ratings of structural frame and bearing walls are permitted to be reduced by 1 hour where supporting a roof only.*
Other Non-bearing partitions	0 hours, but not less than fire resistance rating required by other sections of the code
Floor Construction: Secondary Members	R-2: 1 hour S-2: 2 hours
Roof Construction and Secondary Members	R-2: 1 hour S-2: 1 hour
Dwelling unit demising walls (Section 708.3)	Not less than 1 hour
Corridor walls (Section 708.3 and Table 1016.1)	Use Group R-2: not less than 1/2 hour Use Group S: 0 hours ***Note:*** *The above ratings are allowed per Table 1016.1,when an automatice sprinkler system in accordance with Section 903.3.1.1 (NFPA 13) is provided.*
Residential corridor walls (Section 708.3, exception 1)	Not less than ½ hour (Table 1016.1). Corridor walls may terminate at similarly-rated corridor ceiling (Section 708.4, exception 3). STC rating shall be maintained if corridor wall is not continued to ceiling.
Horizontal Floor Separations (Section 711.3)	Not less than that required by Table 302.3.2. ***Note:*** *Floor assemblies separating dwelling units in the same building shall be a minimum 1 hour fire resistance rated construction.*
Fire and Smoke Protection Features	**Chapter 7**
Fire Rating of Shaft Enclosures (Section 707.4)	Fire-resistance rating for shaft enclosures shall not be less than 2 hours when connecting 4 or more stories.
Shafts connecting < 4 stories	Not less than 1 hour
Shafts connecting > 4 stories	Not less than 2 hours
Fire Partitions (Section 708) Horizontal Assemblies (Section 712.3)	
Fire Partitions (between dwelling units)	Not less than 1 hour (Section 708.3)
Horizontal Assemblies (between dwelling units)	1 hour minimum, but not less than penetrations (section 711.3)
Smoke Barriers (Section 709.3)	1 hour
Smoke Partitions (Section 710.3)	Unless required elsewehere in the Code, smoke partitions are not required to have a *fire-resistance rating*
Corridor Fire Resistance (Table 1016.1)	All noted below equipped throughout with automatic sprinkler system
Use Group R (greater than 10 served occupants)	½ hour
Use Group S	0 hours
Exit Enclosures (Section 1019.1)	
Exit Enclosures serving > 4 stories	Not less than 2 hours, but not less than floor assembly penetrated
Exit Enclosures serving < 4 stories	Not less than 1 hour, but not less than floor assembly penetrated
Stairways (within dwelling units)	Not required to be enclosed or rated (Section 1022.1.3, exception 3)
Exit Passageways (Section 1020.3)	1 hour minimum, but not less than exit enclosure
Fire Protection Systems	**Chapter 9**
Sprinkler System (Section 903.3.1.1)	In accordance with NFPA 13
Standpipe Systems (Section 905)	To be located in exit enclosures that are remotely located per Section 1015.2
Portable fire extinguishers (Section 906)	Portable fire extinguishers shall be provided in occupancies and locations as required by the 2005 Connecticut State Fire Safety Code • Fire extinguisher shall be installed in accordance with NFPA 10 • Maximum travel distance shall be 75 feet per Table 906.3(1) of the 2005 Connecticut State Fire Safety Code
Automatic Fire Alarm & Detection Systems Group R-2 (Section 907.2.9)	Manual Fire Alarm systems shall be installed in Group R-2 occupancies where: 1. Any dwelling unit located 3 or more stories above the level of exit discharge 2. Any dwelling unit located more than 1-story below level of exit discharge 3. Building contains more then 11 dwelling units ***Exceptions:*** *2. Manual fire alarm boxes not required throughout when following conditions met:* *a. Building is equipped throughout with automatic sprinkler system in accordance with Section 903.3.1.1 (NFPA 13)* *b. Notification appliances activate upon sprinkler flow* *c. At least 1 fire alarm box is installed in approved location*
Single & Multiple Station Smoke Alarms (Where Required) (Section 907.2.10.1.2)	• Shall be installed in accordance with NFPA 72 • Installed outside each sleeping area or bedroom on wall or ceiling • Installed within each room used for sleeping purposes
Alarm Notification Appliances (Section 907.9.1.4)	All dwelling units within Group R-2 shall be provided with the capability to support visible visible alarm notification appliance in accordance with ICC A117.1
Means of Egress	**Chapter 10**
Maximum Floor Area allowed per Occupant	Refer to Table 1004.1.2 Use Group R-2: 200 gross Use Group S-2: N/A
Minimum Ceiling Height (Section 1003.2)	• Minimum ceiling height for means of egress shall be 7'-6" ***Exceptions:*** *1. Sloped ceilings in accordance with Section 1208.2* *2. Dwelling unit ceilings within Residential units per Section 1208.2* *3. Stair headroom in accordance 1009.2*
Capacity of Egress Components (Section 1005.1, Table 1005.1)	• Stairways: 0.3 in. per person with sprinklers • Doors, corridors and ramps: 0.2 in. per person with sprinklers
Accessible Means of Egress (Section 1007.2.1)	Buildings with 4 or more stories above or below level of exit discharge, at least one required accessible means of egress shall be an elevator complying with Section 1007.4
Egress Doors Capacity (Section 1008.1.1)	Minimum width of egress doors: 32 inches Minimum height of egress doors: 80 inches
Minimum stairway width (Section 1009.1)	• Not less than 44 inches for non accessible means of egress • Not less than 48 inches for accessible means of egress (Section 1007.3)
Headroom (Section 1009.2)	Not less than 80 inches measured vertically from a line connecting the edge of the nosings
Riser height and tread depth (Section 1009.3)	• Stair risers:7 inches maximum, 4 inches minimum • Stair treads: 11 inches minimum
Stairway Landings (Section 1009.4)	Not less than required width of stair, can not reduce egress width ***Exception 2:*** *Doors opening onto landings shall not reduce landing to less than 1/2 the required width. Doors shall not project more than 7 inches into the landing when fully open.*
Vertical Rise (Section 1009.6)	Flight of stairs shall be nise no greater than 12 feet between floor levels
Winders (Section 1009.8)	Not allowed in means of egress stairs, except within dwelling unit

Handrails (Section 1009.11)	Common Stair: • Continuous both sides • May project 3½ inches into required stairway width • Not less than 34 inches / no more than 38 inches above nosing • Extend 12 inches beyond top riser, 12 inches + 1 tread beyond bottom riser • Diameter no less than 1¼ inches, no greater than 2 inches
Handrail Extensions (Section 1009.11.5)	• Handrails shall return to a wall, guard or the walking surface or shall be continuous to the handrail of an adjacent flight. • Where handrails are not coninuous between flights, handrails shall extend horizontally in accordance with the following: o 12 inches beyond top riser o 12 inches + depth of tread beyond bottom riser
Guardrails (Section 1012)	• Maximum 42 inches high (Section 1012.2) • No greater than 4 inch spacing between balusters (Section 1012.3) • Required where roof hatch opening is within 10 feet of a roof edge
Length of Exit Access Corridor (Table 1015.1; Table 1015.1)	• Use Group R: 250 feet maximum with sprinklers in accordance with 903.3.1.1 (NFPA 13) • Use Group S-2: 400 feet maximum with sprinklers in accordance 903.3.1.1 (NFPA 13)
Corridor Construction (Section 1016.1)	• Corridors shall be fire-resistance rated in accordance with Table 1016.1 • Corridor walls required to be fire-resistance rated shall comply with Section 708 for fire partitions
Corridor Fire Resistance Rating (Table 1016.1)	• Use Group R: Occupant load > 10 with sprinkler system(*Note C*) – **1/2 hour** • Use Group S: Occupant load > 30 with sprinkler system (*Note C*) **– 0 hours** ***Note C:*** *Buildings equipped throughout with an automatic sprinkler system in accordance with Section 903.3.1.1 or 903.3.1.2 where allowed.*
Minimum width corridor (Section 1016.2)	Minimum corridor width: 44 inches minimum
Dead-End Corridor (Section 1016.3)	20 feet maximum
Number of Exits Required (Table 1018.1)	• 2 independent means of egress for 500 or less occupants
Vertical Exit Enclosures (Table 1019.1)	Interior exit stairways & ramps shall have a fire resistance rating of not less than 2 hours when connecting 4 or more stories.
Exit Discharge (Section 1023.1)	• Maximum 50% of number / capacity of exit enclosures permitted to exit through areas on level of discharge provided 1.) free path through area to exit door, 2.) entire area on level of discharge is fire-resistant construction rating for exit enclosure, and 3.) area is sprinklered (Section 1027.1, exception1). • Maximum 50% of number / capacity of exit enclosures permitted to egress through a vestibule provided 1.) fire-resistant construction rating for vestibule to match exit enlcosure, 2.) depth from exterior of building less than 10 feet and distance less than 30 feet, and 3.) approved (wired glass) glazing separating vestibule from level of discharge (Section 1027.1, exception 2).
Exit Dischare Capacity (Section 1023.2)	The capacity of exit discharge shall be not less than the required discharge capacity of the exits being served.
Exit Discharge Remoteness (Section 1023.2.1)	Where two or more doors leading to an exit discharge are required a minimum of two such doors shall be placed a distance apart equal to not less than one-third of the length of the maximum overall diagonal dimension of the building served, measured in a straight line between doors.
Ramps	Section 1010
Slope (Section 1010.2)	• No steeper than 1:12 (8%) maximum slope if used for means of egress • No steeper than 1:8 (12%) is not used for egress
Handicap Access:	All public spaces to be handicap accessible as per ADA 2010 Public areas and Units per MAAB and FHA (FHA safe harbor used FHADM 1998 - FHA Design Guidelines)
Accessibility	**Chapter 11**
Accessible Route Multi-Level Buildings (Section 1104.4)	At least one (1) accessible route shall connect each accessible level, including mezzanines, in multilevel buildings and facilities.
Parking & Passenger Loading Facilities (Section 1106.1 & Table 1106.1)	Where parking is provided, accessible parking spaces shall be provided in compliance with Table 1106.1. The number accessible parking spaces shall be determined by the total number spaces provided ***Proposed Parking Spaces:*** *93 (43 covered; 50 Surface)* ***Required Accessible Spaces:*** *4, one (1) which shall be van-accessible, per Section 1106.5*
Accessible Parking Spaces (Section 1106.1.1)	Pursuant to subsection (h) of section 14-253a of Connecticut General Statutes, parking spaces shall be as near as possible to building entrance, and ***• 15 feet wide, including 5 feet of cross hatch.*** Cross-hatched portions shall not be shared between spaces.
Parking for Groups R-2 & R-3 (Section 1106.2)	Two per cent (2%), but not less than once of each type of parking space provided in occupancies R-2 and R-3, which are required to have Accessible, Type A or Type B dwelling units shall be accessible.
Group R-2 & R-3 Parking Beneath a Building (Section 1106.2.1)	Where parking is provided within or beneath a building, accessible parking spaces shall also be provided within or beneath the building. ***Proposed Parking Spaces:*** *43* ***Required Accessible Spaces:*** *2, one (1) which shall be van-accessible per Section 1106.5*
Van Spaces (Section 1106.5)	For every six or fraction of six accessible parking spaces, at least one shall be a van-accessible parking space.
Van Accessible Parking Spaces (Section 1106.5.1)	Pursuant to subsection (h) of section 14-253a of Connecticut General Statutes, parking spaces for passenger vans designated for the handicapped shall be as near as possible to building entrance, and ***• 16 feet wide, including 8 feet of cross hatch.*** Cross-hatched portions shall not be shared between spaces.
Dwelling/Sleeping Units (Section 1107.6.2; 1107.6.2.1.1; 1107.6.2.1.2)	Group R-2 Accessible Units • Type A & Type B units shall be provided • 10%, not less than one of the total number of units shall be Type A in accordance with ICC/ANSI A117.1-2003. Type A units shall be dispersed among the various unit types • Where 4 or more dwelling units in a single structure, every dwelling unit intended to be occupied as a residence shall be Type B units in accordance with ICC/ANSI A117.1-2003 ***Note:*** *All R-2 units on the site, within the building or within the complex, shall be considered to determine the total number of units and the required number of Type A units. Type A units shall be dispensed among the various classes of units.* ***Proposed # of Units:*** *80 Units total (70 units in building)* ***Type A Units Required:*** *10 units* ***Type B Units Required:*** *70 units* ***Exception 1 (1106.6.2.1.1):*** *The number of Type A units is permitted to be reduced in accordance with Section 1107.7.5*
Design Flood Elevation (Section 1107.7.5)	The required number of Type A & Type B units shall not apply to a site where the lowest floor of the lowest structural building members of non-elevator buildings are required to be at or above the design flood elevation resulting in: 1. A difference in elevation between the minimum required floor elevation at the primary entrances and vehicular & pedestrian arrival points within 50 feet

	exceeding 30 inches, and 2. A slope exceeding 10 percent between the minimum required floor elevation at the primary entrances & vehicular and pedestrian arrival points within 50 feet.
Interior Environment	Chapter 12
Natural Ventilation (Section 1203.4)	Natural Ventilation shall be through windows, doors, louvers or other openings to the outdoors.
Ventilation area requied (Section 1203.4.1)	Minimum openable area to the outdoors shall be 4% of the floor area being ventilated
Contaminants Exhausted (Section 1203.4.2 & 1203.4.2.1)	• Contaminant sources in naturally ventilated spaces shall be removed in accordance with International Mechanical Code & International Fire Code • Bathrooms shall be mechanically ventilated to the outdoors in accordance with the International Mechanical Code.
Natural Light (Section 1205.1 & 1205.2)	• Minimum net glazed area shall not be les than 8% of floor area of room served • Operable windows or windows that can be cleared by firefighters • Area not less than 40 SF for 50 linear feet of perimeter (Sections 403.1 to 403.6)
Artificial Light (Section 1205.3)	An average illumination of 10 foot-candles (107 lux) over the area of the room at a height of 30 inches A.F.F.
Emergency Egress Lighting (Section 1205.5	Means of egress lighting shall be illuminated in accordance with Section 1006.1 •Means of egress lighting, including exit discharge shall be illuminated at all times the building space served by the means of egress is occupied • Means of egress illumination level shall not be less than 1 foot candle (11 lux) at the floor level (Section 1006.2)
Air-borne Sound Transmission (Sections 1207.2)	Not less than 50 (45 field-tested) STC rating
Structure-borne Sound Transmission (Section 1207.3)	Not less than 50 (45 field-tested) IIC (impact insulation class) rating
Minimum room dimensions (Section 1208.1)	• Minimum width of habitable space, except kitchens: 7 feet in any plan dimension • Kitchens shall have a clear passageway between counters: not less than 36 inches
Minimum ceiling heights (Section 1208.2)	• Minimum ceiling height of occupiable spaces: 7 feet 6 inches • Minimum ceiling height in corridors, kitchens, baths, laundry: 7 feet
Room area (Section 1208.3)	• Each dwelling unit shall have at least one room minimum 120 NSF • All other habitable rooms shall not be less than 70 NSF
Energy Requirements	**2009 Internation Energy Conservation Code**
Climate Zone (Table 301.1)	**Climate Zone:** 5A
Insulation & Fenestration Criteria (Section 502.1.1)	• The building thermal envelope shall meet the requirements of Tables 502.2(1) and 502.3 based on the climate zone specified in Chapter 3. • Commercial buildings, or portions thereof, enclosing Group R occupancies shall use the R-Value from the "Group R" column of Table 502.2(1)
Building Envelope Requirements: Opague Walls (Table 502.2(1))	• **Above Grade Walls** (Wood Framed): R-13 + R-3.8 ci (Continuous Insulation) • **Roofs:** R-20 ci (Continuous Insulation) • **Slabs on Grade** (Heated): R-15 for 24" below
Building Envelope Requirements: Fenestration (Table 502.3)	Vertical Fenestration: 40% maximum of above grade wall **Required:** • **U-Factor** (Framing other than Metal): 0.35 maximum • **U-Factor** (Metal Framing w/ or w/o thermal break): • Curtain Wall/Storefront: 0.45 • Entrance Door: 0.80 • All Other: 0.55 • **SHGC** (All Frame Types): • PF < 0.25: .40 • 0.25 ≤ PF > 0.5: NR • PF ≥ 0.5: NR **Proposed:** • **U-Factor** (Framing other than Metal): 0.30 maximum • **U-Factor** (Metal Framing w/ or w/o thermal break): • Curtain Wall/Storefront: 0.32
	• Entrance Door: 0.27 • All Other: 0.32 • **SHGC** (All Frame Types): 0.30

Washington Village Phase 1

20 Day Street
Building B

Norwalk, CT

Trinity Washington Village Limited Partnership
&
the Norwalk Housing Authority

ICON ARCHITECTURE
101 SUMMER ST BOSTON MA 02110
617-451-3333 www.iconarch.com

CONSULTANT

STAMP



MARK	DATE	DESCRIPTION
	09-15-2014	PERMIT/ PRICING
	06-13-2014	PRICING
	11-18-2013	40% CHFA
	09-19-2013	CAM/ SPECIAL PERMIT

PROJECT NO.: 21222
DRAWN BY: DW, KH
CHECKED BY:

SHEET TITLE

CODE REVIEW -
BUILDING B

G-004

9/18/2014 3:28 PM

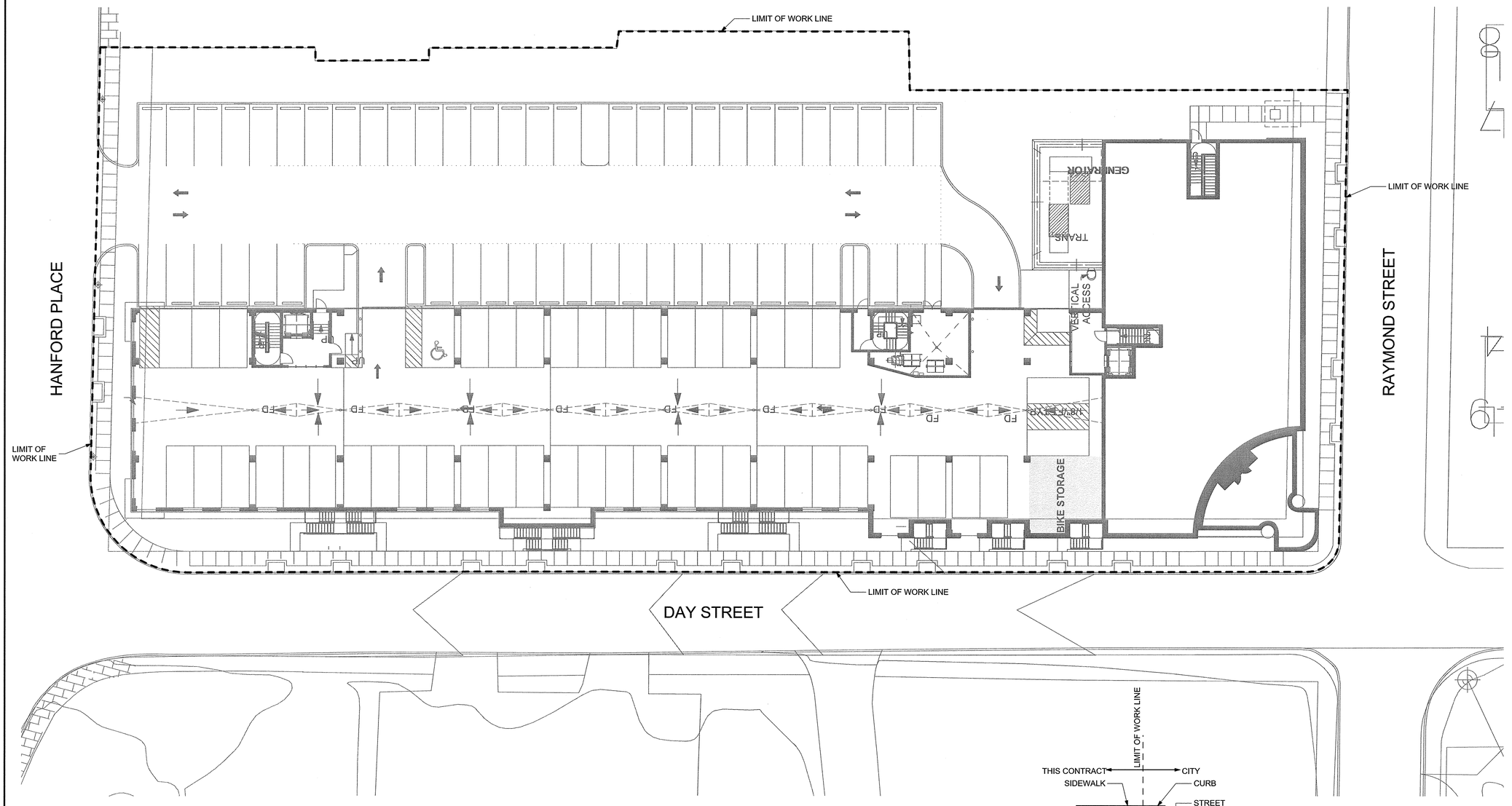

WORK OUTSIDE OF THE "SITE LIMIT OF WORK" INCLUDES UTILITY SERVICE CONNECTIONS TO THE SNEW WATER MAIN, THE SNEW ELECTRIC DUCT BANK, THE YANKEE GAS MAIN, THE AT&T TELEPHONE DUCT BANK, THE CABLEVISION CABLE TV DUCT BANK AND THE CITY OF NORWALK STORM DRAINAGE SYSTEM.

Washington Village Phase 1

20 Day Street Building B

Norwalk, CT

Trinity Washington Village Limited Partnership
&
the Norwalk Housing Authority

E-ICON ARCHITECTURE
101 SUMMER ST BOSTON MA 02110
617-451-3333 www.iconarch.com

CONSULTANT

STAMP

MARK	DATE	DESCRIPTION
	09-15-2014	PERMIT/ PRICING
	06-13-2014	PRICING
	11-18-2013	40% CHFA
	09-19-2013	CAM/ SPECIAL PERMIT

PROJECT NO.: 21222
DRAWN BY: KH
CHECKED BY:

SHEET TITLE

LIMIT OF WORK BUILDING B

G-005

9/18/2014 3:28 PM

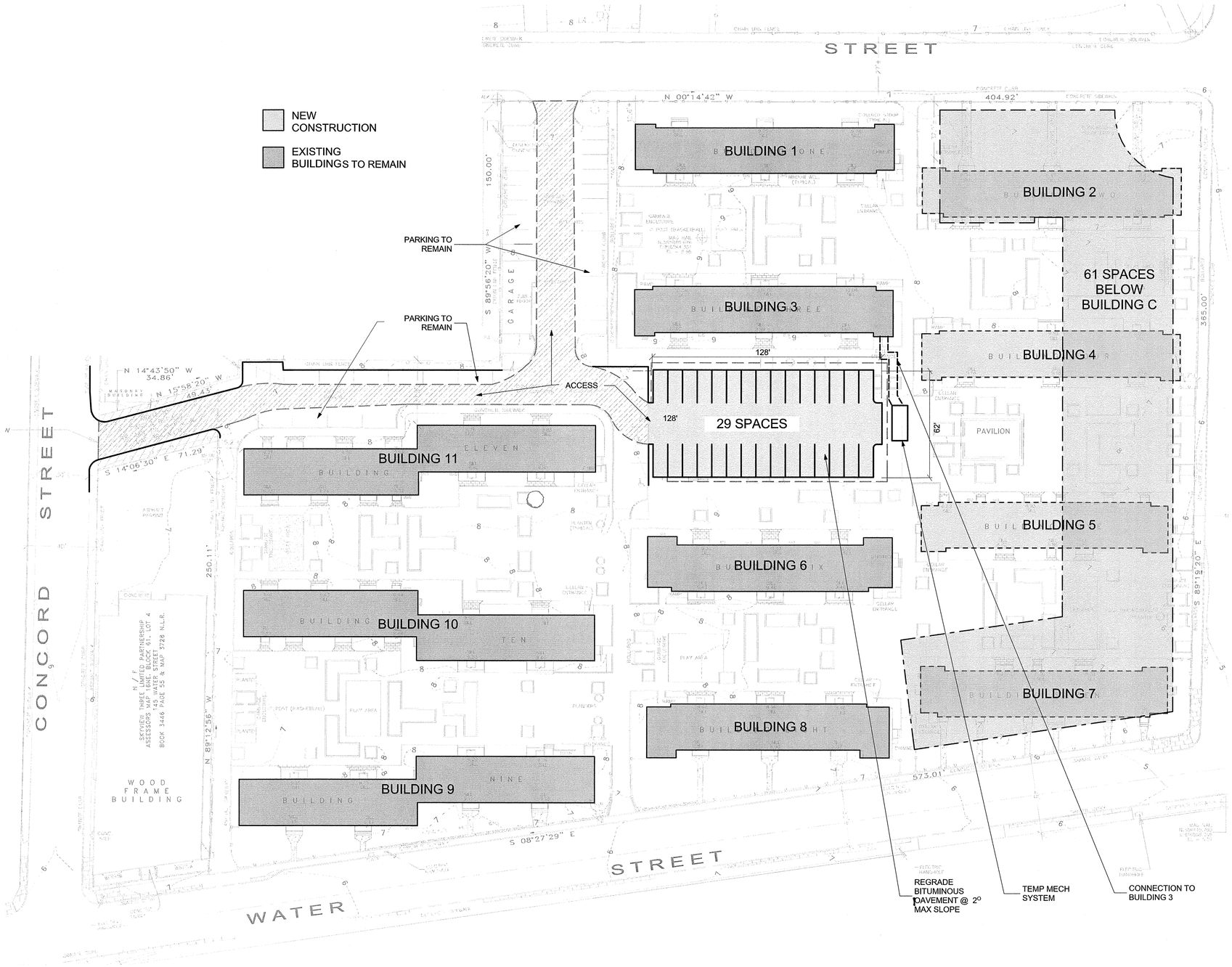

2 INTERIM PARKING PLAN

Washington Village Phase 1

20 Day Street Building B

Norwalk, CT

Trinity Washington Village Limited Partnership
&
the Norwalk Housing Authority

E-ICON ARCHITECTURE
101 SUMMER ST BOSTON MA 02110
617-451-3333 www.iconarch.com

CONSULTANT

STAMP

STATE OF CONNECTICUT STEVEN A. HEWIN NO. 8664 LICENSED ARCHITECT

KEY PLAN

MARK	DATE	DESCRIPTION

PROJECT NO.: 21222
DRAWN BY:
CHECKED BY:

SHEET TITLE

OFF-SITE INTERIM PARKING

G-006

9/19/2014 10:30 AM

PROPERTY, TOPOGRAPHIC &
ALTA/ACSM LAND TITLE SURVEY
SHEET 1 OF 3 SHEETS
DEPICTING
WASHINGTON VILLAGE, 13 & 20 DAY STREET
PREPARED FOR

TRINITY WASHINGTON VILLAGE LIMITED PARTNERSHIP

AND

THE NORWALK HOUSING AUTHORITY

NORWALK, CONNECTICUT

SCALE: 1" = 30 FT. SEPTEMBER 4, 2013

REFER TO SHEET 3 OF 3 SHEETS FOR CERTIFICATIONS, NOTES, ETC.

WILLIAM W. SEYMOUR & ASSOCIATES, P.C.
LAND SURVEYORS ~ ZONING & LAND USE CONSULTANTS
170 NOROTON AVENUE ~ 203-655-3331 ~ DARIEN, CONN. ©

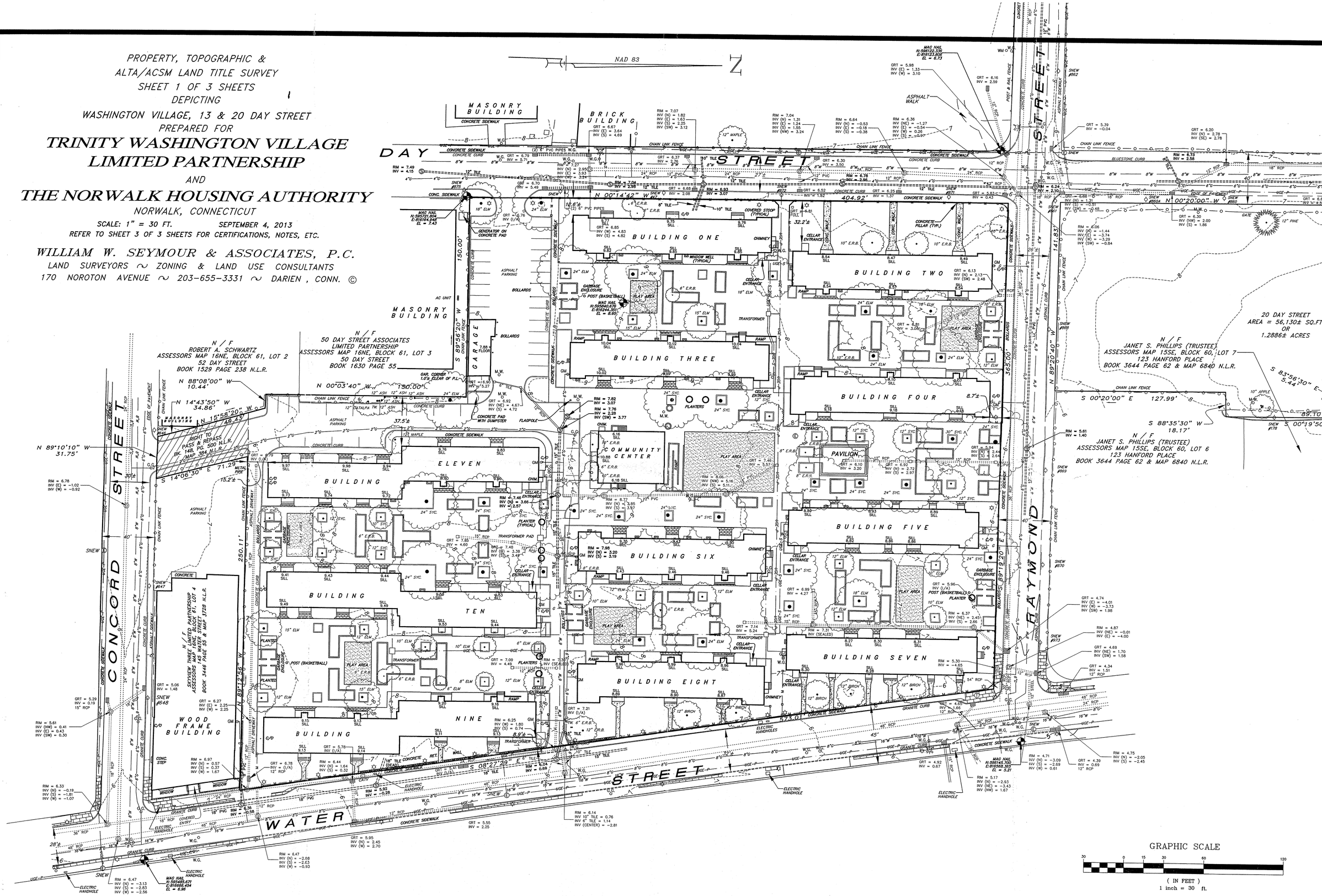

13-13283.DWG

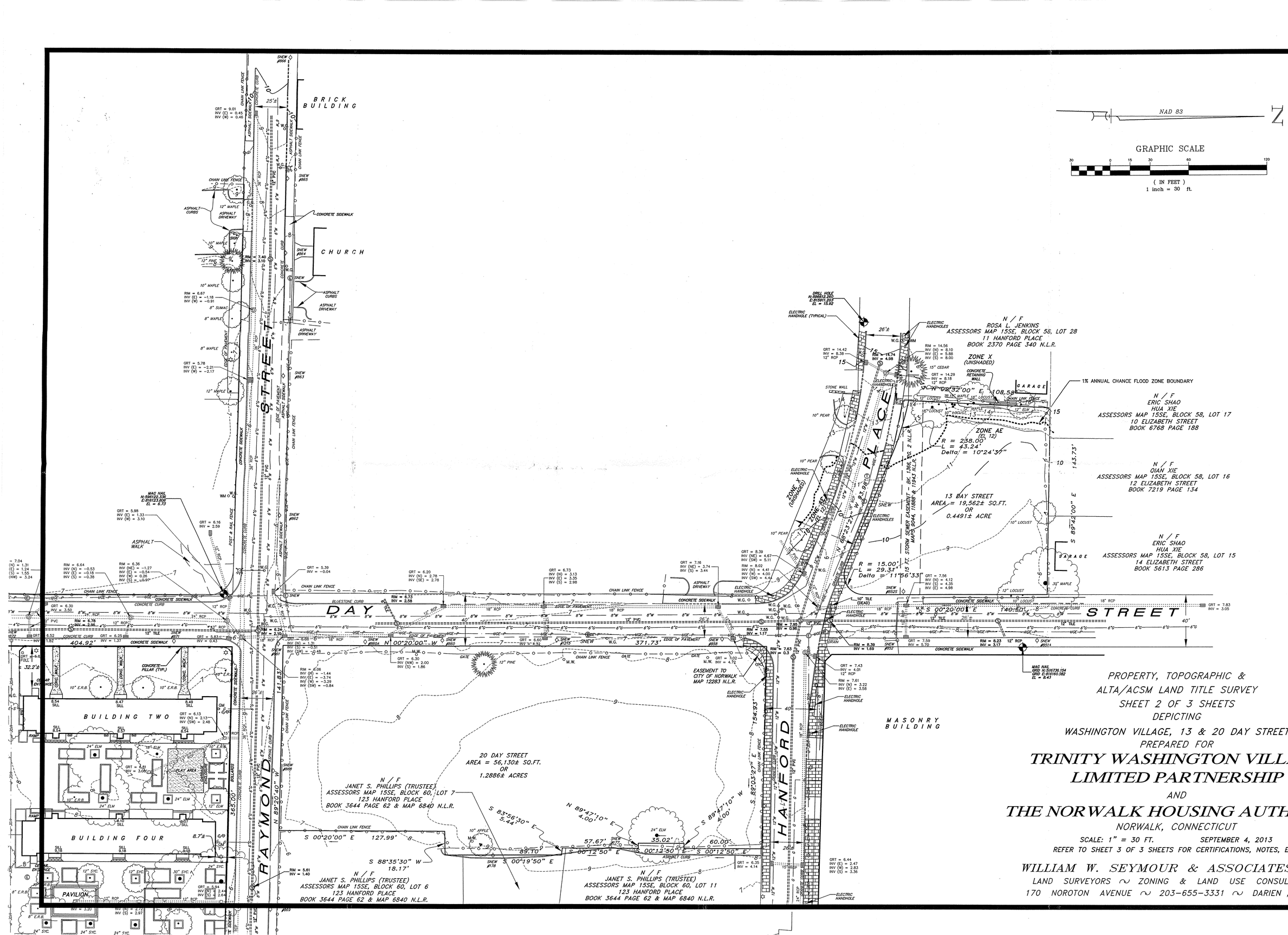
NAD 83
GRAPHIC SCALE
30 0 15 30 60 120
(IN FEET)
1 inch = 30 ft.
BRICK BUILDING
CHURCH
MASONRY BUILDING
SNEW #866
SNEW #865
SNEW #864
SNEW #863
SNEW #862
SNEW #861
SNEW #860
SNEW #860A
SNEW #859
SNEW #858
SNEW #857
SNEW #856
SNEW #855
SNEW #854
SNEW #853
SNEW #852
SNEW #851
SNEW #889
SNEW #888
SNEW #887
SNEW #886
SNEW #885
SNEW #884
SNEW #883
SNEW #882
SNEW #881
SNEW #880
SNEW #879
SNEW #878
SNEW #877
SNEW #876
SNEW #875
SNEW #874
SNEW #873
SNEW #872
SNEW #871
SNEW #870
SNEW

LEGEND

- EDGE OF ROADWAY PAVEMENT
- EDGE OF DRIVEWAY
- CURB & MATERIAL
- RIGHT OF WAY LINE
- PROPERTY LINE
- LIMIT OF WETLANDS
- SANITARY SEWER
- STORM DRAIN
- STONE WALL
- WIRE FENCE (X — X)
- METAL FENCE (M — M)
- SPLIT RAIL OR PICKET FENCE
- STOCKADE FENCE
- CHAIN LINK FENCE
- UNDERGROUND ELECTRIC – PRIMARY (UGE–P)
- UNDERGROUND ELECTRIC – SECONDARY (UGE–S)
- GAS (G)
- WATER (W)
- POLE & GUY
- ELECTRIC MANHOLE
- DECIDUOUS TREE
- EVERGREEN TREE
- E.R.B. — EASTERN RED BUD
- HEDGE
- TELEPHONE MANHOLE
- MONUMENT
- DRILL HOLE
- IRON PIPE OR PIN (AS NOTED)
- GS/DPS CONTROL POINT OR BENCHMARK
- CATCH BASIN
- STORM DRAIN MANHOLE
- SANITARY SEWER MANHOLE
- HYDRANT
- WG — WATER GATE
- GG — GAS GATE
- M.W. — MONITORING WELL
- WM — WATER METER
- LIGHT
- C/O — CLEAN OUT
- HANDHOLE

ZONING DATA CHART 'INDUSTRIAL NO. 1' ZONE – WASHINGTON VILLAGE

	REQUIRED / ALLOWED	EXISTING	PROPOSED
LOT AREA	5,000 SQ. FT.	207,419± SQ. FT. 4.7617± ACRES	NO CHANGE
LOT WIDTH	50 FT. MIN.	XX.XX FT.	NO CHANGE
FRONT YARD	35 FT. MIN. FROM C.L. SUBJECT TO SECT. 118–100B; EXCEPT FOR MULTIFAMILY AND MIXED USE DEVELOPMENTS WHICH SHALL BE LOCATED NOT MORE THAN TEN (10) FEET FROM PROPERTY LINE, SUBJECT TO 118–700 C (6)	X.X± FT.	
SIDE YARD	NONE EXCEPT WHERE RESIDENCE ZONE ABUTS 10 FT. PER STORY OR 20 FT. WHICHEVER IS GREATER, SUBJECT TO 118–100F; NONE FOR MULTIFAMILY AND MIXED USE DEVELOPMENTS		
AGGREGATE SIDE YARD	NONE EXCEPT WHERE RESIDENCE ZONE OR COASTAL WATERS ABUT 10 FEET PER STORY OR 20 FT. WHICHEVER IS GREATER, SUBJECT TO 118–100F; NONE FOR MULTIFAMILY AND MIXED USED DEVELOPMENTS		
REAR YARD	10 FT. EXCEPT WHERE RESIDENCE ZONE OR COASTAL WATERS ABUT 10 FEET PER STORY OR 20 FEET WHICHEVER IS GREATER, SUBJECT TO 118–100F; NONE FOR MULTIFAMILY AND MIXED USE DEVELOPMENTS		
BUILDING AREA	50% FOR BUILDINGS 90% FOR BUILDINGS AND PARKING; NONE FOR MULTIFAMILY AND MIXED USE DEVELOPMENTS IN TRANSIT ORIENTED DEVELOPMENTS		
FLOOR AREA RATIO	1.0; 2.0 FOR MULTIFAMILY AND MIXED USE DEVELOPMENTS IN TRANSIT ORIENTED DEVELOPMENTS		
BUILDING HEIGHT	4 STORIES & 50 FT., 6 STORIES & 72 FT. ON LOTS 30 ACRES OR LARGER, 5 STORIES & 60 FT. ABOVE BASE FLOOD LEVEL FOR MULTIFAMILY & MIXED USE DEVELOPMENTS WHICH PROVIDE A MINIMUM OF THIRTY (30%) AFFORDABLE HOUSING IN ACCORDANCE WITH SECTION 8–30g OF THE CT. GENERAL STATUTES, PROVIDED THAT A MINIMUM OF TEN PERCENT (10%) THE TOTAL NUMBER OF UNITS SHALL COMPLY WITH SECTION 118–1050 WORKFORCE HOUSING REGULATION		
RECREATION AREA	150 SQ.FT. PER DWELLING UNIT, MAY INCLUDE BALCONIES, COURTYARDS, INDOOR RECREATIONAL FACILITIES, LANDSCAPED ROOFS AND OUTDOOR RECREATIONAL AREAS		
RESIDENTIAL DENSITY	1,650 SQ.FT. OF LOT AREA PER DWELLING UNIT, SUBJECT TO SECTION 118–1050; 800 SQ.FT. OF LOT AREA PER DWELLING UNIT FOR MULTIFAMILY DEVELOPMENTS WHICH PROVIDE A MINIMUM OF THIRTY PERCENT (30%) AFFORDABLE HOUSING IN ACCORDANCE WITH SECTION 8–30g OF THE CT. GENERAL STATUTES, PROVIDED THAT A MINIMUM OF TEN (10%) THE TOTAL NUMBER OF UNITS SHALL COMPLY WITH SECTION 118–1050 WORKFORCE HOUSING REGULATION		

WASHINGTON VILLAGE, NORWALK, CT

DESCRIPTION: Beginning at a point, said point being the intersection of the southerly line of Raymond Street with the easterly line of Day Street;

Thence, running easterly along said southerly line of Raymond Street south 89° 19' 20" east a distance of 365.00 feet to the westerly line of Water Street;

Thence, running southerly along said westerly line of Water Street south 08° 27' 29" east a distance of 573.01 feet to a point and land now or formerly of Skyview Three Limited Partnership;

Thence, running westerly and southerly along land of now or formerly of said Skyview Three Limited Partnership north 89° 12' 56" west a distance of 250.11 feet and south 14° 06' 30" east a distance of 71.29 feet to a point on the northerly line of Concord Street;

Thence, running westerly along said northerly line of Concord Street north 89° 10' 10" west a distance of 31.75 feet to land now or formerly of Robert A. Schwartz;

Thence, running northerly and westerly along land now or formerly of said Schwartz the following courses and distances: north 14° 43' 50" west a distance of 34.86 feet and north 15° 58' 20" west a distance of 49.43 feet and north 88° 08' 00" west a distance of 10.44 feet to a point;

Thence, turning and running northerly, still along land now or formerly of said Schwartz and land now or formerly of 50 Day Street Associates, each in part, north 0° 03' 40" west a distance of 150.00 feet;

Thence, turning and running westerly, still along land now or formerly of said 50 Day Street Associates, south 89° 56' 20" west a distance of 150.00 feet to the aforesaid easterly line of Day Street;

Thence, running northerly along said easterly line of Day Street north 0° 14' 42" west a distance of 404.92 feet to the aforesaid southerly line of Raymond Street and the point of beginning.

Said parcel is bounded northerly by Raymond Street, easterly by Water Street, southerly and easterly by land now or formerly of Skyview Three Limited Partnership, again southerly by Concord Street, westerly, southerly, again westerly and again southerly by lands now or formerly of Robert A. Schwartz and 50 Day Street Associates, each in part, and again westerly by Day Street.

Comprising in area 207,419± sq. ft. or 4.7617± acres.

ZONING DATA CHART 'INDUSTRIAL NO. 1' ZONE – 13 DAY STREET

	REQUIRED / ALLOWED	EXISTING	PROPOSED
LOT AREA	5,000 SQ. FT.	19,562± SQ. FT. 0.4491± ACRES	NO CHANGE
LOT WIDTH	50 FT. MIN.	XX.XX FT.	NO CHANGE
FRONT YARD	35 FT. MIN. FROM C.L. SUBJECT TO SECT. 118–100B; EXCEPT FOR MULTIFAMILY AND MIXED USE DEVELOPMENTS WHICH SHALL BE LOCATED NOT MORE THAN TEN (10) FEET FROM PROPERTY LINE, SUBJECT TO 118–700 C (6)	X.X± FT.	
SIDE YARD	NONE EXCEPT WHERE RESIDENCE ZONE ABUTS 10 FT. PER STORY OR 20 FT. WHICHEVER IS GREATER, SUBJECT TO 118–100F; NONE FOR MULTIFAMILY AND MIXED USE DEVELOPMENTS		
AGGREGATE SIDE YARD	NONE EXCEPT WHERE RESIDENCE ZONE OR COASTAL WATERS ABUT 10 FEET PER STORY OR 20 FT. WHICHEVER IS GREATER, SUBJECT TO 118–100F; NONE FOR MULTIFAMILY AND MIXED USED DEVELOPMENTS		
REAR YARD	10 FT. EXCEPT WHERE RESIDENCE ZONE OR COASTAL WATERS ABUT 10 FEET PER STORY OR 20 FEET WHICHEVER IS GREATER, SUBJECT TO 118–100F; NONE FOR MULTIFAMILY AND MIXED USE DEVELOPMENTS		
BUILDING AREA	50% FOR BUILDINGS 90% FOR BUILDINGS AND PARKING; NONE FOR MULTIFAMILY AND MIXED USE DEVELOPMENTS IN TRANSIT ORIENTED DEVELOPMENTS		
FLOOR AREA RATIO	1.0; 2.0 FOR MULTIFAMILY AND MIXED USE DEVELOPMENTS IN TRANSIT ORIENTED DEVELOPMENTS		
BUILDING HEIGHT	4 STORIES & 50 FT., 6 STORIES & 72 FT. ON LOTS 30 ACRES OR LARGER, 5 STORIES & 60 FT. ABOVE BASE FLOOD LEVEL FOR MULTIFAMILY & MIXED USE DEVELOPMENTS WHICH PROVIDE A MINIMUM OF THIRTY (30%) AFFORDABLE HOUSING IN ACCORDANCE WITH SECTION 8–30g OF THE CT. GENERAL STATUTES, PROVIDED THAT A MINIMUM OF TEN PERCENT (10%) THE TOTAL NUMBER OF UNITS SHALL COMPLY WITH SECTION 118–1050 WORKFORCE HOUSING REGULATION		
RECREATION AREA	150 SQ.FT. PER DWELLING UNIT, MAY INCLUDE BALCONIES, COURTYARDS, INDOOR RECREATIONAL FACILITIES, LANDSCAPED ROOFS AND OUTDOOR RECREATIONAL AREAS		
RESIDENTIAL DENSITY	1,650 SQ.FT. OF LOT AREA PER DWELLING UNIT, SUBJECT TO SECTION 118–1050; 800 SQ.FT. OF LOT AREA PER DWELLING UNIT FOR MULTIFAMILY DEVELOPMENTS WHICH PROVIDE A MINIMUM OF THIRTY PERCENT (30%) AFFORDABLE HOUSING IN ACCORDANCE WITH SECTION 8–30g OF THE CT. GENERAL STATUTES, PROVIDED THAT A MINIMUM OF TEN (10%) THE TOTAL NUMBER OF UNITS SHALL COMPLY WITH SECTION 118–1050 WORKFORCE HOUSING REGULATION		

13 DAY STREET, NORWALK, CT

DESCRIPTION: Beginning at a point on the westerly line of Day Street, said point being the intersection of said westerly line of Day Street with the northerly line of Hanford Place;

Thence, running southwesterly and northwesterly along said northerly line of Hanford Place the following courses and distances: 28.31 feet along a tangent arc curving to the right, the radius of which is 15.00 feet and subtending a delta or central angle of 11° 56' 33" and north 68° 23' 27" west a distance of 93.98 feet and along a tangent arc curving to the left, the radius of which is 238.00 feet and a distance of 43.24 feet subtending a delta or central angle of 10° 24' 37" to land now or formerly of Rosa L. Jenkins;

Thence, running northerly along land now or formerly of said Jenkins north 2° 32' 00" east a distance of 108.58 feet to a point and land now or formerly of Eric Shao & Hua Xie;

Thence, running easterly along land now or formerly of said Shao & Xie, land now or formerly of Qian Xie and other lands now or formerly of said Shao & Xie, each in part, south 89° 42' 00" east a distance of 143.73 feet to the aforesaid westerly line of Day Street;

Thence, running southerly along said westerly line of Day Street south 0° 20' 00" east a distance of 140.50 feet to the aforesaid northerly line of Hanford Place and the point of beginning.

Said parcel is bounded northerly by lands now or formerly of Shao & Xie and land now or formerly of Qian Xie, each in part, easterly by Day Street, southerly by Hanford Place and westerly by land now or formerly of Jenkins.

Comprising in area 19,562± sq. ft. or 0.4491 acre.

ZONING DATA CHART 'INDUSTRIAL NO. 1' ZONE – 20 DAY STREET

	REQUIRED / ALLOWED	EXISTING	PROPOSED
LOT AREA	5,000 SQ. FT.	56,130± SQ. FT. 1.2886± ACRES	NO CHANGE
LOT WIDTH	50 FT. MIN.	XX.XX FT.	NO CHANGE
FRONT YARD	35 FT. MIN. FROM C.L. SUBJECT TO SECT. 118–100B; EXCEPT FOR MULTIFAMILY AND MIXED USE DEVELOPMENTS WHICH SHALL BE LOCATED NOT MORE THAN TEN (10) FEET FROM PROPERTY LINE, SUBJECT TO 118–700 C (6)	X.X± FT.	
SIDE YARD	NONE EXCEPT WHERE RESIDENCE ZONE ABUTS 10 FT. PER STORY OR 20 FT. WHICHEVER IS GREATER, SUBJECT TO 118–100F; NONE FOR MULTIFAMILY AND MIXED USE DEVELOPMENTS		
AGGREGATE SIDE YARD	NONE EXCEPT WHERE RESIDENCE ZONE OR COASTAL WATERS ABUT 10 FEET PER STORY OR 20 FT. WHICHEVER IS GREATER, SUBJECT TO 118–100F; NONE FOR MULTIFAMILY AND MIXED USED DEVELOPMENTS		
REAR YARD	10 FT. EXCEPT WHERE RESIDENCE ZONE OR COASTAL WATERS ABUT 10 FEET PER STORY OR 20 FEET WHICHEVER IS GREATER, SUBJECT TO 118–100F; NONE FOR MULTIFAMILY AND MIXED USE DEVELOPMENTS		
BUILDING AREA	50% FOR BUILDINGS 90% FOR BUILDINGS AND PARKING; NONE FOR MULTIFAMILY AND MIXED USE DEVELOPMENTS IN TRANSIT ORIENTED DEVELOPMENTS		
FLOOR AREA RATIO	1.0; 2.0 FOR MULTIFAMILY AND MIXED USE DEVELOPMENTS IN TRANSIT ORIENTED DEVELOPMENTS		
BUILDING HEIGHT	4 STORIES & 50 FT., 6 STORIES & 72 FT. ON LOTS 30 ACRES OR LARGER, 5 STORIES & 60 FT. ABOVE BASE FLOOD LEVEL FOR MULTIFAMILY & MIXED USE DEVELOPMENTS WHICH PROVIDE A MINIMUM OF THIRTY (30%) AFFORDABLE HOUSING IN ACCORDANCE WITH SECTION 8–30g OF THE CT. GENERAL STATUTES, PROVIDED THAT A MINIMUM OF TEN PERCENT (10%) THE TOTAL NUMBER OF UNITS SHALL COMPLY WITH SECTION 118–1050 WORKFORCE HOUSING REGULATION		
RECREATION AREA	150 SQ.FT. PER DWELLING UNIT, MAY INCLUDE BALCONIES, COURTYARDS, INDOOR RECREATIONAL FACILITIES, LANDSCAPED ROOFS AND OUTDOOR RECREATIONAL AREAS		
RESIDENTIAL DENSITY	1,650 SQ.FT. OF LOT AREA PER DWELLING UNIT, SUBJECT TO SECTION 118–1050; 800 SQ.FT. OF LOT AREA PER DWELLING UNIT FOR MULTIFAMILY DEVELOPMENTS WHICH PROVIDE A MINIMUM OF THIRTY PERCENT (30%) AFFORDABLE HOUSING IN ACCORDANCE WITH SECTION 8–30g OF THE CT. GENERAL STATUTES, PROVIDED THAT A MINIMUM OF TEN (10%) THE TOTAL NUMBER OF UNITS SHALL COMPLY WITH SECTION 118–1050 WORKFORCE HOUSING REGULATION		

20 DAY STREET, NORWALK, CT

DESCRIPTION: Beginning at a point, said point being the intersection of the southerly line of Hanford Place with the easterly line of Day Street;

Thence, running easterly along said southerly line of Hanford Place south 89° 03' 27" east a distance of 154.93 feet to land now or formerly of Janet S. Phillips;

Thence, running southerly, westerly, again southerly, easterly, again southerly, again easterly, again southerly, again westerly and again southerly along said land now or formerly of Janet S. Phillips, other land now or formerly of said Phillips and again other land now or formerly of said Phillips, each in part, the following courses and distances: south 0° 12' 50" east a distance of 60.00 feet and south 89° 47' 10" west a distance of 4.00 feet and south 0° 12' 50" east a distance of 35.02 feet and north 89° 47' 10" east a distance of 4.00 feet and south 0° 12' 50" east a distance of 57.67 feet and south 83° 56'30" east a distance of 5.44 feet and south 0° 19' 50" east a distance of 89.10 feet and south 88° 35'30" west a distance of 18.17 feet and south 0° 20' 00" east a distance of 127.99 feet to a point on the northerly line of Raymond Street;

Thence, running westerly along said northerly line of Raymond Street north 89° 20' 40" west a distance of 141.83 feet to the aforesaid easterly line of Day Street;

Thence, running northerly along said easterly line of Day street north 0° 20' 00" west a distance of 371.73 feet to the aforesaid southerly line of Hanford Place and the point of beginning.

Said parcel is bounded northerly by Hanford Place, easterly by lands now or formerly of Janet S. Phillips, southerly by Raymond Street and westerly by Day Street.

Comprising in area 56,130± sq. ft. or 1.2886± acres.

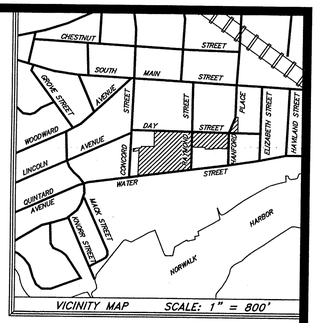

VICINITY MAP SCALE: 1" = 800'

WASHINGTON VILLAGE
AREA = 207,419± SQ.FT.
OR 4.7617± ACRES

13 DAY STREET
AREA = 19,562± SQ.FT.
OR 0.4491± ACRES

20 DAY STREET
AREA = 56,130± SQ.FT.
OR 1.2886± ACRES

THIS SURVEY AND MAP HAVE BEEN PREPARED IN ACCORDANCE WITH SECTIONS 20–300B–1 THROUGH 20–300B–20 OF THE REGULATIONS OF CONNECTICUT STATE AGENCIES – "MINIMUM STANDARDS FOR SURVEYS AND MAPS IN THE STATE OF CONNECTICUT" AS ADOPTED FOR USE BY THE CONNECTICUT ASSOCIATION OF LAND SURVEYORS, INC. ON SEPTEMBER 26, 1996. IT IS A PROPERTY & TOPOGRAPHIC SURVEY THE BOUNDARY DETERMINATION CATEGORY OF WHICH IS A RESURVEY CONFORMING TO HORIZONTAL ACCURACY CLASS 'A – 2', VERTICAL ACCURACY CLASS 'V – 2' AND TOPOGRAPHIC ACCURACY CLASS '1 – 2' AND IS INTENDED TO BE USED FOR CONVEYANCING, MORTGAGING, FINANCING AND TITLE INSURANCE PURPOSES AND TO DEPICT OR NOTE THE POSITION OF EXISTING OR PROPOSED IMPROVEMENTS WITH RESPECT TO APPLICABLE MUNICIPAL SETBACK REQUIREMENTS IN ORDER TO ENABLE DETERMINATION OF COMPLIANCE WITH SAID REGULATIONS.

THIS SURVEY WAS PREPARED FOR A SPECIFIC PURPOSE. ANY USE OTHER THAN FOR THAT WHICH WAS INTENDED IS A MISUSE OF THIS INFORMATION AND RENDERS THE PREPARER'S DECLARATION NULL AND VOID.

UNAUTHORIZED ALTERATIONS OR ADDITIONS TO THIS MAP RENDERS THE PREPARER'S DECLARATION NULL AND VOID.

DISTANCES NOTED +/– FROM BUILDINGS TO PROPERTY LINES ARE FOR REFERENCE PURPOSES ONLY AND ARE NOT TO BE USED TO ESTABLISH PROPERTY BOUNDARIES.

UNDERGROUND IMPROVEMENTS OR ENCROACHMENTS, IF ANY, ARE NOT DEPICTED HEREON.

STRUCTURES DEPICTED HEREON ARE MORE THAN THREE (3) YEARS OLD.

SUBJECT PROPERTIES LOCATED IN AN 'INDUSTRIAL NO. 1' ZONE.

ALL BOUNDARY MONUMENTATION FOUND OR SET HAS BEEN DEPICTED HEREON.

REFER TO MAP NOS. 1907, 5740, 7503, 9044, 9375, 10331, 10737, 10851, 11104, 11188, 11283, 11284 AND 102010 OF THE NORWALK LAND RECORDS.

REFER TO BK. 148 PG. 500 AND BK. 1366 PG. 2 OF THE NORWALK LAND RECORDS.

REGARDING WASHINGTON VILLAGE: REFER TO BK. 280, PG. 348 AND BK. 281, PG. 605 OF THE NORWALK LAND RECORDS.

REGARDING 13 DAY STREET: REFER TO BK. 2515, PG. 6, BK. 1375, PG. 224 & BK. 1326, PG. 188 OF THE NORWALK LAND RECORDS.

REGARDING 20 DAY STREET: REFER TO BK. 1395, PG. 344, BK. 1387, PG. 292, BK. 1387, PG. 289, BK. 1387, PG. 286, BK. 1385, PG. 234, BK. 1378, PG. 88, BK. 1378, PG. 85, BK. 1378, PG. 82, BK. 1378, PG. 80, BK. 1376, PG. 116, BK. 1370, PG. 112, BK. 1359, PG. 279, BK. 1334, PG. 277, BK. 1312, PG. 294, BK. 1312, PG. 292 & BK. 1312, PG. 290 OF THE NORWALK LAND RECORDS.

REFER TO AN UNRECORDED MAP BY TITLED "WASHINGTON VILLAGE HOUSING PROJECT FOR THE HOUSING AUTHORITY CITY OF NORWALK – CONN." SCALE 1" = 20' AND DATED DECEMBER 8, 1939.

INLAND WETLANDS, IF ANY, ARE NOT DEPICTED HEREON.

THE 1% ANNUAL CHANCE FLOOD ZONE BOUNDARY DEPICTED HEREON HAS BEEN DERIVED FROM ELEVATIONS NOTED ON THE FEDERAL EMERGENCY MANAGEMENT AGENCY FLOOD INSURANCE RATE MAPS 09001C0531G AND 09001C0533G DATED JULY 8, 2013. THIS INFORMATION IS PROVIDED FOR REFERENCE PURPOSES ONLY AND DOES NOT NECESSARILY REPRESENT THE ACTUAL POTENTIAL FOR FLOOD DAMAGE TO ANY EXISTING OR PROPOSED STRUCTURES LOCATED ON THIS PROPERTY.

SUBJECT PROPERTIES LIES ENTIRELY WITHIN A COASTAL AREA MANAGEMENT BOUNDARY.

THE UNDERGROUND UTILITIES SHOWN HEREON HAVE BEEN LOCATED FROM FIELD SURVEY INFORMATION AND EXISTING DRAWINGS. THE SURVEYOR MAKES NO GUARANTEES THAT THE UNDERGROUND UTILITIES SHOWN COMPRISE ALL SUCH UTILITIES IN THE AREA, EITHER IN SERVICE OR ABANDONED. THE SURVEYOR FURTHER DOES NOT WARRANT THAT THE UNDERGROUND UTILITIES SHOWN ARE IN THE EXACT LOCATION INDICATED ALTHOUGH HE DOES CERTIFY THAT THEY ARE LOCATED AS ACCURATELY AS POSSIBLE FROM INFORMATION AVAILABLE. THE SURVEYOR HAS NOT PHYSICALLY LOCATED THE UNDERGROUND UTILITIES.

PRIOR TO EXCAVATION THE EXACT LOCATION OF THE UTILITIES SHOULD BE CONFIRMED WITH 'CALL BEFORE YOU DIG' @ 1–800–922–4455 AND/OR THE RESPECTIVE UTILITY COMPANIES.

TO: TRINITY WASHINGTON VILLAGE LIMITED PARTNERSHIP
TRINITY WASHINGTON VILLAGE, INC.
TRINITY FINANCIAL, INC.
CITY OF NORWALK
NORWALK REDEVELOPMENT AGENCY

THIS IS TO CERTIFY THAT THIS MAP OR PLAT AND THE SURVEY ON WHICH IT IS BASED WERE MADE IN ACCORDANCE WITH THE 2011 MINIMUM STANDARD DETAIL REQUIREMENTS FOR ALTA/ACSM LAND TITLE SURVEYS, JOINTLY ADOPTED BY BY ALTA AND NSPS AND INCLUDES ITEMS 2, 3, 4, 5, 6(b), 8, 9, 11(a), 13, 16, 17, 18, AND 21 ($1,000,000 MINIMUM THRESHOLD) OF TABLE A THEREOF. THE FIELD WORK WAS COMPLETED ON AUGUST 19, 2013.

TO MY KNOWLEDGE AND BELIEF, THIS MAP IS SUBSTANTIALLY CORRECT AS NOTED HEREON.

ON 9/4/13 BY Mark S. Lebow

MARK S. LEBOW, CT PLS #15564

PROPERTY, TOPOGRAPHIC &
ALTA/ACSM LAND TITLE SURVEY
SHEET 3 OF 3 SHEETS
DEPICTING
WASHINGTON VILLAGE, 13 & 20 DAY STREET
PREPARED FOR

TRINITY WASHINGTON VILLAGE LIMITED PARTNERSHIP

AND

THE NORWALK HOUSING AUTHORITY

NORWALK, CONNECTICUT

SCALE: 1" = 30 FT. SEPTEMBER 4, 2013

WILLIAM W. SEYMOUR & ASSOCIATES, P.C.
LAND SURVEYORS ~ ZONING & LAND USE CONSULTANTS
170 NOROTON AVENUE ~ 203–655–3331 ~ DARIEN, CONN. ©

13–13283.DWG

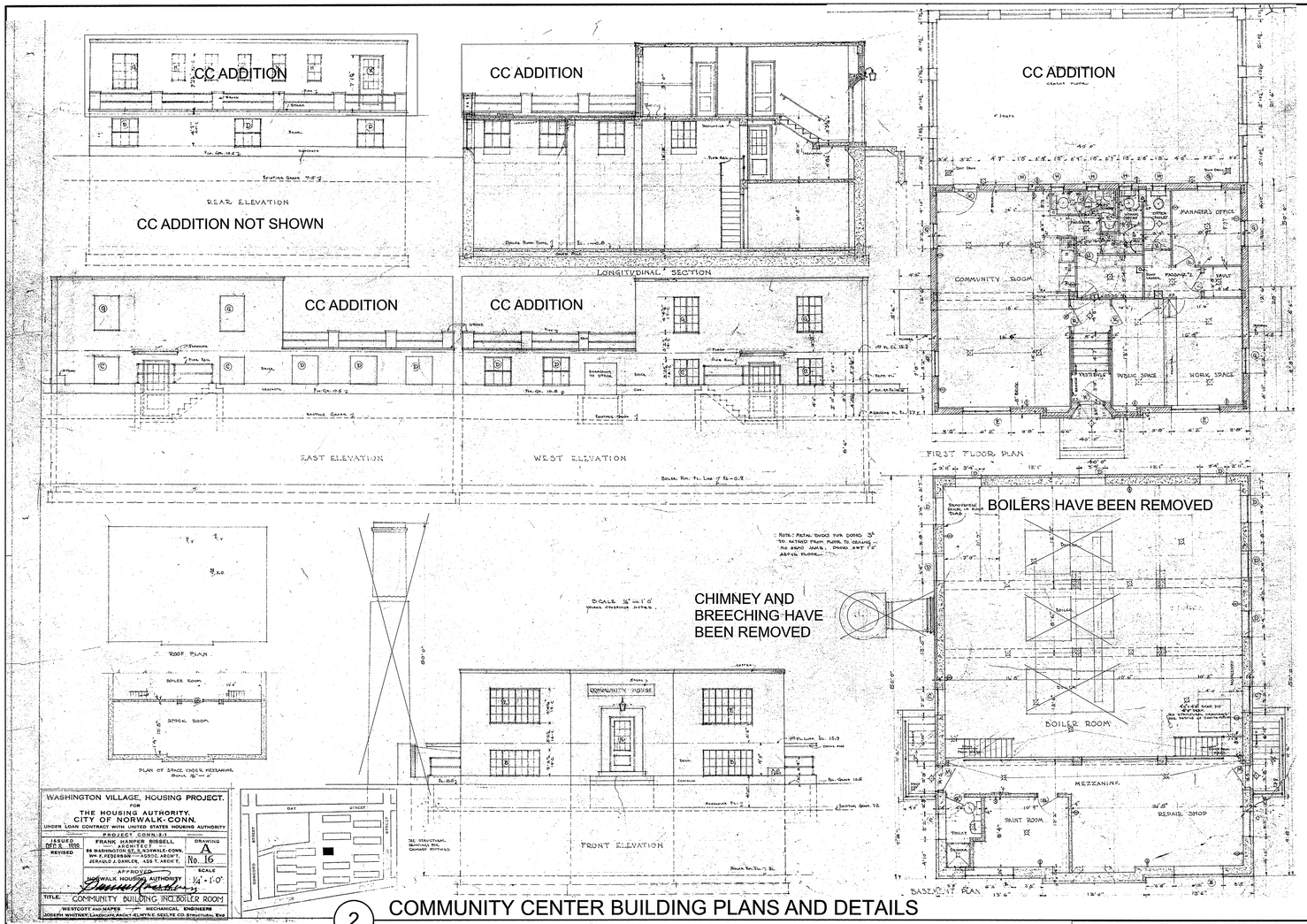

2 COMMUNITY CENTER BUILDING PLANS AND DETAILS

CAREFULLY REMOVE AND SALVAGE ~~CORNERSTONE~~ AND CONTENTS

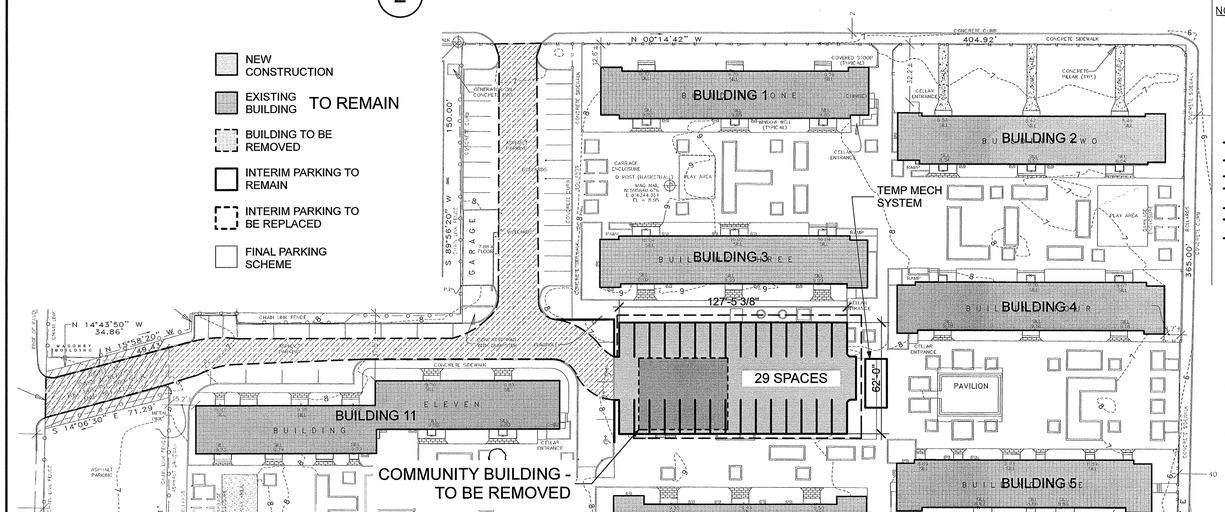

1 SITE PLAN

NOTES:

1. LOCATE AND CLEARLY IDENTIFY TREES, SHRUBS, AND OTHER VEGETATION TO REMAIN OR TO BE RELOCATED. WRAP A 1-INCH BLUE VINYL TIE TAPE FLAG AROUND EACH TREE TRUNK AT 54 INCHES ABOVE GROUND.
2. PROTECT EXISTING SITE IMPROVEMENTS TO REMAIN FROM DAMAGE DURING CONSTRUCTION.
3. PROVIDE TEMPORARY EROSION AND SEDIMENTATION CONTROL MEASURES TO PREVENT SOIL EROSION AND DISCHARGE OF SOIL BEARING WATER RUNOFF OR AIRBORNE DUST TO ADJACENT PROPERTIES AND WALKWAYS, ACCORDING TO EROSION AND SEDIMENTATION CONTROL DRAWINGS AND REQUIREMENTS OF AUTHORITIES HAVING JURISDICTION.
4. REMOVE OBSTRUCTIONS, TREES, SHRUBS, AND OTHER VEGETATION TO PERMIT INSTALLATION OF NEW CONSTRUCTION.
5. ~~REMOVE SOD AND GRASS BEFORE STRIPPING TOPSOIL.~~
6. ~~STRIP TOPSOIL IN A MANNER TO PREVENT INTERMINGLING WITH UNDERLYING SUBSOIL OR OTHER WASTE MATERIALS.~~
7. ~~REMOVE SUBSOIL AND NON-SOIL MATERIALS FROM TOPSOIL, INCLUDING CLAY LUMPS, GRAVEL, AND OTHER OBJECTS MORE THAN 2 INCHES IN DIAMETER, TRASH, DEBRIS, WEEDS, ROOTS, AND OTHER WASTER MATERIALS.~~
8. ~~STOCKPILE TOPSOIL AWAY FROM EDGE OF EXCAVATIONS WITHOUT INTERMIXING WITH SUBSOIL. GRADE AND SHAPE STOCKPILES TO DRAIN SURFACE WATER. COVER TO PREVENT WINDBLOWN DUST AND EROSION BY WATER.~~
9. ~~LIMIT HEIGHT OF TOPSOIL STOCKPILES TO 72 INCHES.~~
10. DO NOT STOCKPILE ~~TOPSOIL~~ WITHIN TREE PROTECTION ZONES.
11. ARRANGE WITH UTILITY COMPANIES TO SHUT OFF INDICATED UTILITIES AND COORDINATE WITH APPLICABLE UTILITY COMPANY'S STANDARDS.
12. LOCATE, IDENTIFY, DISCONNECT, AND SEAL OR CAP UTILITIES INDICATED TO BE REMOVED OR ABANDONED IN PLACE.
13. EXCAVATE FOR AND REMOVE UNDERGROUND UTILITIES INDICATED TO BE REMOVED.
14. FILL DEPRESSIONS CAUSED BY CLEARING AND GRUBBING OPERATIONS AND UTILITY EXCAVATION WITH SATISFACTORY SOIL MATERIAL UNLESS FURTHER EXCAVATION OR EARTHWORK IS INDICATED.
15. PLACE FILL MATERIAL IN HORIZONTAL LAYERS NOT EXCEEDING A LOOSE DEPTH OF 8 INCHES, AND COMPACT EACH LAYER TO A DENSITY EQUAL TO ADJACENT ORIGINAL GROUND.
16. REMOVE AND DISPOSE EXISTING ABOVE AND BELOW GRADE IMPROVEMENTS AS INDICATED AND NECESSARY TO FACILITATE NEW CONSTRUCTION.
17. UNLESS EXISTING FULL-DEPTH JOINTS COINCIDE WITH LINE OF DEMOLITION, NEATLY SAW-CUT ALONG LINE OF EXISTING PAVEMENT OT REMAIN BEFORE REMOVING ADJACENT EXISTING PAVEMENT.
18. REMOVE AND DISPOSE SLABS, PAVING, CURBS, GUTTERS, AND AGGREGATE BASE AS INDICATED.
19. REMOVE SURPLUS SOIL MATERIAL, ROCK, ~~UNSUITABLE~~ TOPSOIL, OBSTRUCTIONS, DEMOLISHED MATERIALS, AND WASTE MATERIALS INCLUDING TRASH AND DEBRIS, AND LEGALLY DISPOSE OF THEM OFF OWNER'S PROPERTY.
20. BURNING OF MATERIAL IS PROHIBITED.
21. INSPECT, MAINTAIN, AND REPAIR EROSION AND SEDIMENTATION CONTROL MEASURES DURING CONSTRUCTION UNTIL PERMANENT VEGETATION HAS BEEN ESTABLISHED.
22. REPAIR OR REPLACE TREES, SHRUBS, AND OTHER VEGETATION INDICATED TO REMAIN OR BE RELOCATED THAT ARE DAMAGED BY CONSTRUCTION OPERATIONS, IN A MANNER APPROVED BY ENGINEER.

Washington Village Phase 1

20 Day Street Building B

Norwalk, CT

Trinity Washington Village Limited Partnership
&
the Norwalk Housing Authority

E-ICON ARCHITECTURE
101 SUMMER ST BOSTON MA 02110
617-451-3333 www.iconarch.com

CONSULTANT

STAMP

STATE OF CONNECTICUT
STEVEN A. HEINY
NO. 8992
LICENSED ARCHITECT

KEY PLAN

MARK	DATE	DESCRIPTION

PROJECT NO.: 21222
DRAWN BY:
CHECKED BY:

SHEET TITLE

DEDUCT/ALTERNATE INTERIM PARKING

D-001

9/19/2014 10:17 AM

NB: ORIGINAL BOILERS, APPURTENANCES AND BOILER STACK HAVE BEEN DEMOLISHED

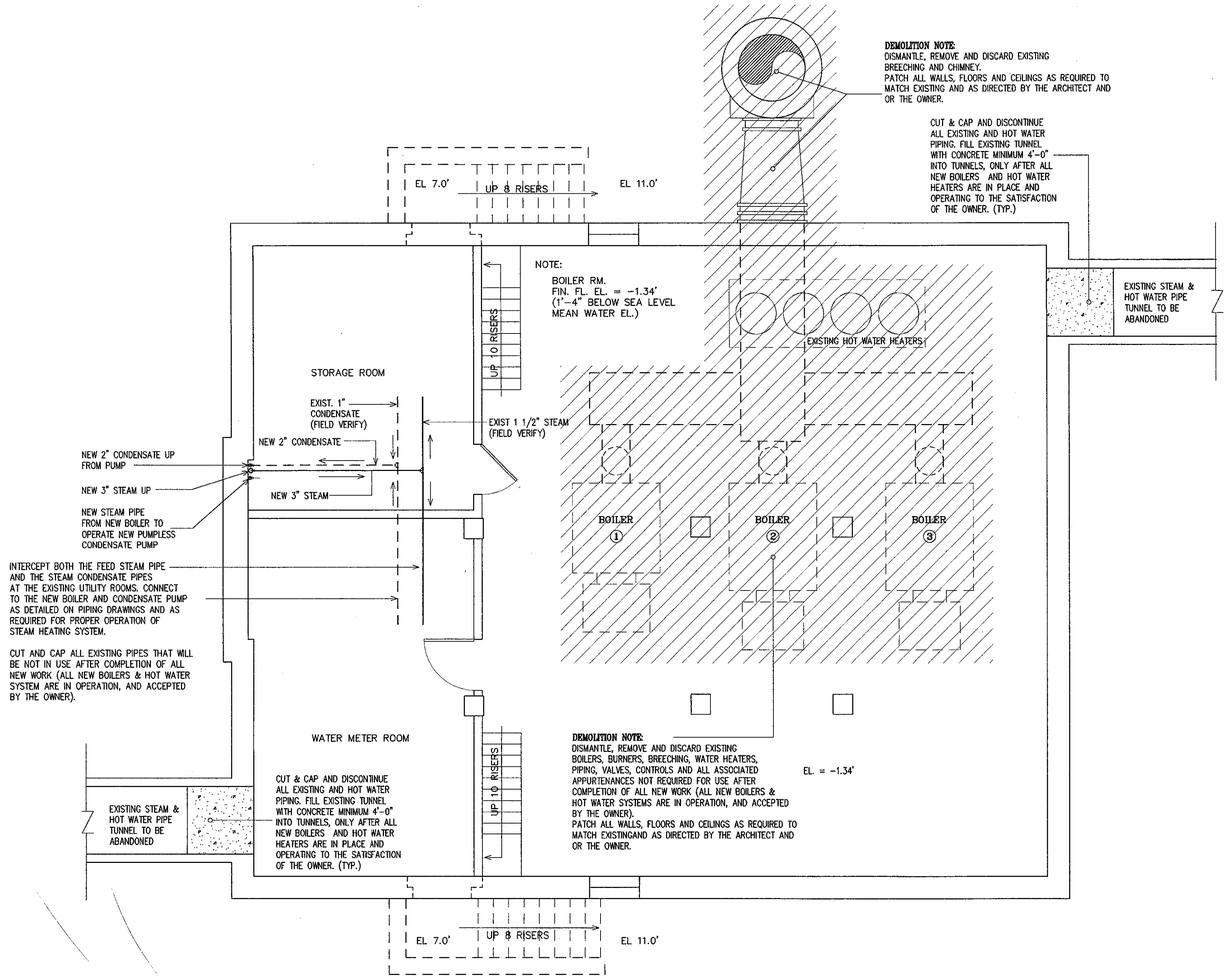

EXISTING BOILER ROOM & MEZZANINE

SCALE: 1/4"=1'-0"

NOTE:
This drawing is for reference only, Refer to current survey plan.

WASHINGTON VILLAGE COMMUNITY CENTER

PHASE 1
DEMOLITION

PERMIT/PRICING SEPT 15, 2014

EXISTING CONDITIONS PLAN - NOT VERIFIED BY OWNER
CONTRACTOR SHALL VERIFY ALL EXISTING CONDITIONS PRIOR TO PROCEEDING WITH THE WORK

SITE KEY

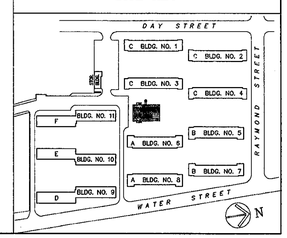

STATE OF CONNECTICUT
MARIO PANUCCIA
No. 3147
REGISTERED ARCHITECT

FILE NAME: –
REVISION No.: –
REVISED BY: –
REVISION DATE: –
PLOT DATE: –

Copyright 1997 by PAE&E Group Inc., all rights reserved. Drawn in the United States of America.

All ideas, designs, arrangements, and plans indicated or represented by this drawing are owned by and property of PAE&E Group Inc. and were created, evolved and developed for use on and in connection with the specified project. None of such ideas, designs, arrangements or plans shall be used by or disclosed to any person, firm, or corporation for any purpose whatsoever without the written permission of PAE&E Group Inc. Written dimensions on these drawings shall have precedence over scaled dimensions. Contractor shall verify and be responsible for all dimensions and conditions on the job and this office must be notified of any variations from the dimensions and conditions shown by these drawings.

Contractor shall do all cutting, patching, repairing and cleaning necessary to complete all work shown on these drawings.

Owner's Approval: CONSTRUCTION DOCUMENT PHASE

Signature _____ Date _____

PRINT NAME & TITLE

NO.	DATE	ISSUE	BY
	7/6/2001	ISSUED FOR BIDDING	MDP

PAE&E GROUP INC.
ARCHITECTURE • ENGINEERING • PLANNING • ENVIRONMENTAL SERVICES
39 CHURCH STREET NEW HAVEN, CONNECTICUT 06510 (203) 946 2000

PROJECT TITLE

BOILER REPLACEMENT
AT
WASHINGTON VILLAGE APARTMENTS
RAYMOND AND DAY STREETS
SOUTH NORWALK, CONNECTICUT
FOR
THE HOUSING AUTHORITY OF THE CITY OF NORWALK

DRAWING TITLE

BOILER ROOM PLAN

DATE 5/13/2001

SCALE 1/4"=1'-0"

PROJECT NO. 110800

DRAWING NO. A–1

NB: ORIGINAL BOILERS, APPURTENANCES AND CHIMNEY STACK HAS BEEN DEMOLISHED

TRAP PRIMER NOTE : (TP)

TRAP PRIMER NOTE:
PROVIDE FLOOR DRAINS FOR ALL NEW BOILER ROOMS
PROVIDE TRAP PRIMER ON ALL FLOOR DRAINS.
PROVIDE 1/2" COLD WATER FROM BOILER MAKE-UP WATER SUPPLY TO TRAP PRIMER VALVE. PROVIDE SELF ADJUSTING AUTOMATIC TRAP PRIMER AND DISTRIBUTION UNIT COMPLETE WITH CORROSION RESISTANT BRASS FITTINGS WITH A COPPER RESERVOIR, CLEAR PLASTIC INSPECTION COVER ON RESERVOIR. PROVIDE MOUNTING BRACKETS. PROVIDE 1/2" COLD WATER PIPE IN SLAB TO FLOOR DRAIN (TYP. FOR ALL FLOOR DRAINS). FOR TYPICAL SANITARY AND COLD WATER CONNECTIONS TO FLOOR DRAIN SEE DRAWING P-1.

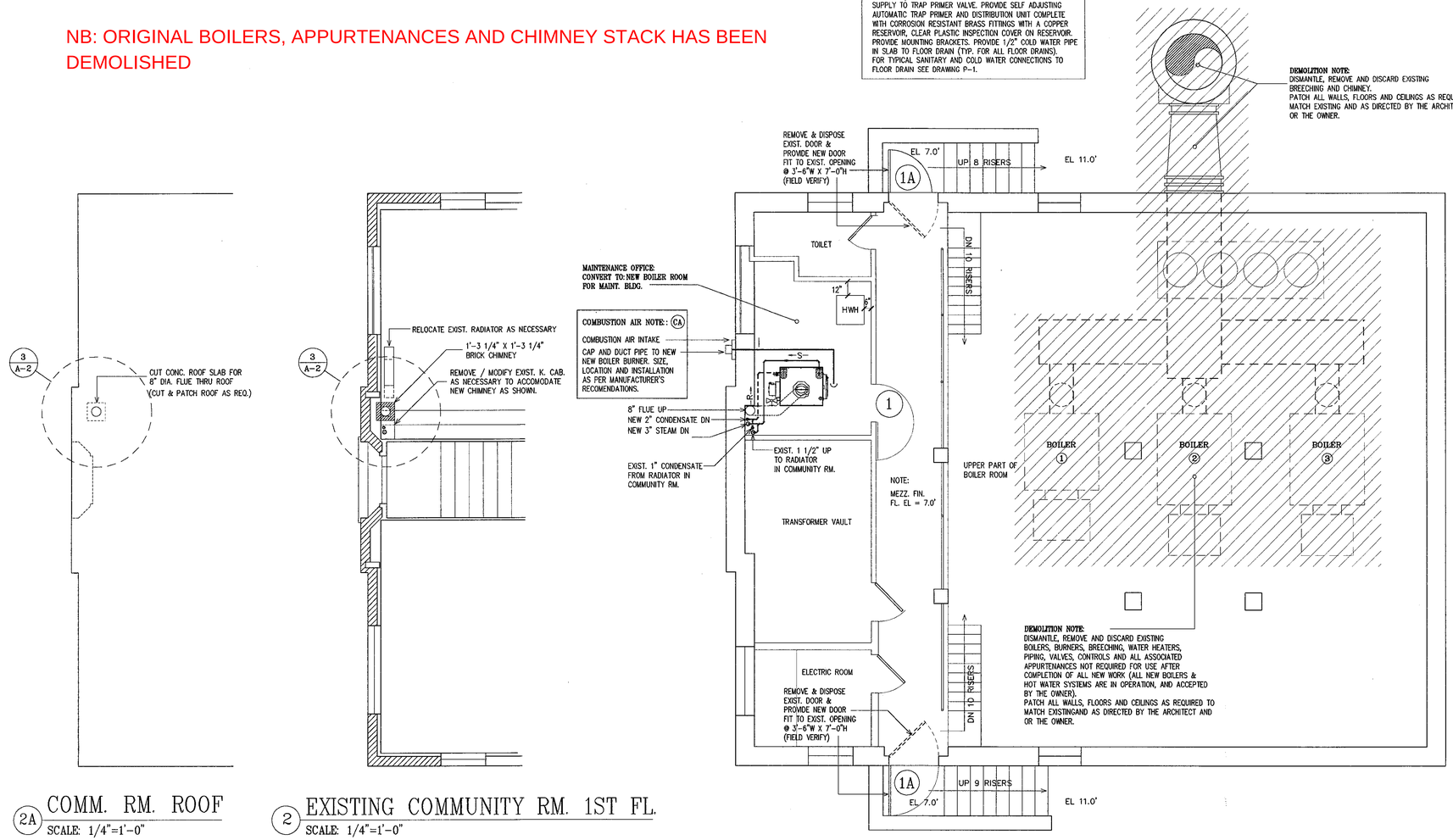

2A COMM. RM. ROOF
SCALE: 1/4"=1'-0"

2 EXISTING COMMUNITY RM. 1ST FL.
SCALE: 1/4"=1'-0"

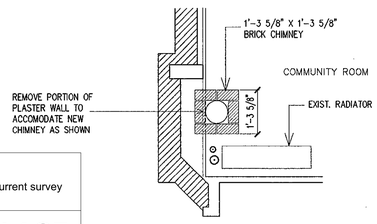

3 DETAIL NEW CHIMNEY
SCALE: 1/2"=1'-0"

1 EXISTING BOILER ROOM MEZZANINE PLAN
SCALE: 1/4"=1'-0"

NOTE:
This drawing is for reference only, Refer to current survey plan.

WASHINGTON VILLAGE COMMUNITY CENTER
PHASE 1
DEMOLITION

PERMIT/PRICING SEPT 15, 2014

EXISTING CONDITIONS PLAN - NOT VERIFIED BY OWNER
CONTRACTOR SHALL VERIFY ALL EXISTING CONDITIONS PRIOR TO PROCEEDING WITH THE WORK

STATE OF CONNECTICUT
MARIO PANICCIA
No. 3147
REGISTERED ARCHITECT

SITE KEY

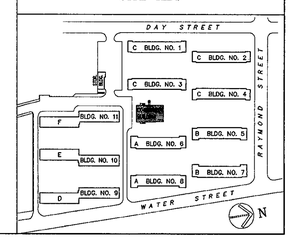

FILE NAME:
REVISION No.: –
REVISED BY: –
REVISION DATE: –
PLOT DATE: –

Copyright 1997 by PAE&E Group Inc., all rights reserved. Drawn in the United States of America.

All ideas, designs, arrangements, and plans indicated or represented by this drawing are owned by and property of PAE&E Group Inc. and were created, evolved and developed for use on and in connection with the specified project. None of such ideas, designs, arrangements or plans shall be used by or disclosed to any person, firm, or corporation for any purpose whatsoever without the written permission of PAE&E Group Inc. Visitors should not scale drawings PAE&E Group Inc. will furnish figured dimensions. Contractor shall verify and be responsible for all dimensions and conditions on the job and this office must be notified of any variations from the dimensions and conditions shown by these drawings.

Contractor shall do all cutting, patching, repairing and clearing necessary to complete all work shown on these drawings.

Owner's Approval: CONSTRUCTION DOCUMENT PHASE

Signature _____ Date _____

PRINT NAME & TITLE

NO.	DATE	ISSUE	BY
	7/6/2001	ISSUED FOR BIDDING	MDP

PAE&E GROUP INC.
ARCHITECTURE • ENGINEERING • PLANNING • ENVIRONMENTAL SERVICES
39 CHURCH STREET NEW HAVEN, CONNECTICUT 06510 (203) 946 2000

PROJECT TITLE

BOILER REPLACEMENT
AT
WASHINGTON VILLAGE APARTMENTS
RAYMOND AND DAY STREETS
SOUTH NORWALK, CONNECTICUT
FOR
THE HOUSING AUTHORITY OF THE CITY OF NORWALK

DRAWING TITLE

BOILER ROOM MEZZANINE

DATE 5/13/2001

SCALE 1/4"=1'-0"

PROJECT NO. 110800

DRAWING NO. A-2

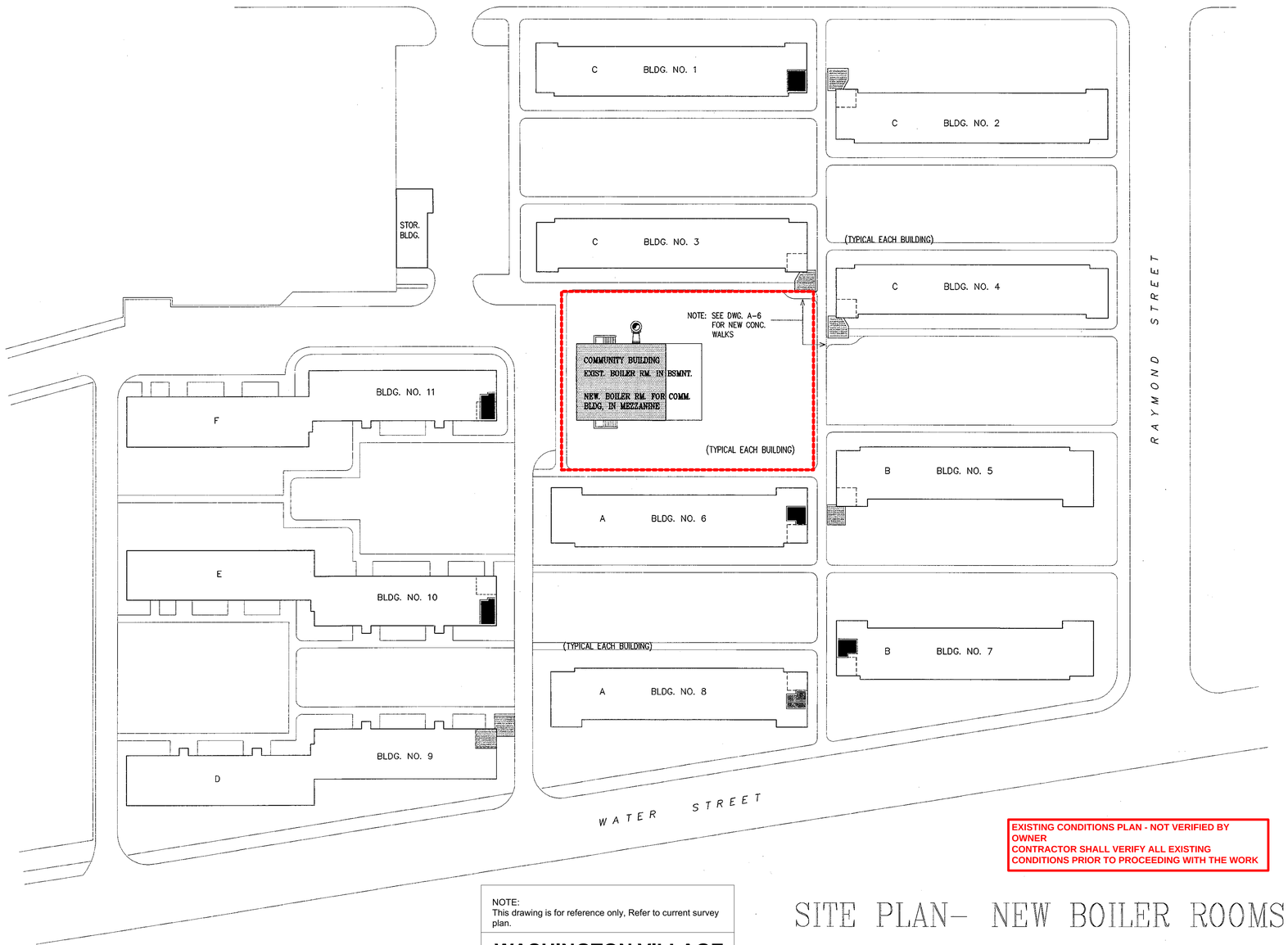

EXISTING CONDITIONS PLAN - NOT VERIFIED BY OWNER
CONTRACTOR SHALL VERIFY ALL EXISTING CONDITIONS PRIOR TO PROCEEDING WITH THE WORK

NOTE:
This drawing is for reference only, Refer to current survey plan.

WASHINGTON VILLAGE COMMUNITY CENTER

PHASE 1
DEMOLITION

PERMIT/PRICING SEPT 15, 2014

SITE PLAN– NEW BOILER ROOMS

SCALE: 1"=30'–0"

STATE OF CONNECTICUT
MARIO PANICCIA
No. 3147
REGISTERED ARCHITECT

FILE NAME:
REVISION No.: –
REVISED BY: –
REVISION DATE: –
PLOT DATE: –

Copyright 1997 by PAE&E Group Inc., all rights reserved. Drawn in the United States of America.

All ideas, designs, arrangements, and plans indicated or represented by this drawing are owned by and property of PAE&E Group Inc. and were created, evolved and developed for use on and in connection with the specified project. None of such ideas, designs, arrangements or plans shall be used by or disclosed to any person, firm, or corporation for any purpose whatsoever without the written permission of PAE&E Group Inc. Written dimensions on these drawings shall have precedence over scaled dimensions. Contractor shall verify and be responsible for all dimensions and conditions on the job and this office must be notified of any variations from the dimensions and conditions shown by these drawings.

Contractor shall do all cutting, patching, repairing and cleaning necessary to complete all work shown on these drawings.

Owner's Approval: CONSTRUCTION DOCUMENT PHASE

Signature _____ Date _____

PRINT NAME & TITLE

NO.	DATE	ISSUE	BY
	7/6/2001	ISSUED FOR BIDDING	MDP

PAE&E GROUP INC.
ARCHITECTURE • ENGINEERING • PLANNING • ENVIRONMENTAL SERVICES
39 CHURCH STREET NEW HAVEN, CONNECTICUT 06510 (203) 946 2000

PROJECT TITLE

ASSESSMENT OF EXIST. BOILERS AND EQUIPMENT AT WASHINGTON VILLAGE APARTMENTS

RAYMOND AND DAY STREETS
SOUTH NORWALK, CONNECTICUT
FOR
THE HOUSING AUTHORITY OF THE CITY OF NORWALK

DRAWING TITLE

SITE PLAN
NEW BOILER ROOMS

DATE 5/13/2001

SCALE 1"=30'–0"

PROJECT NO. 110800

DRAWING NO. ST–1

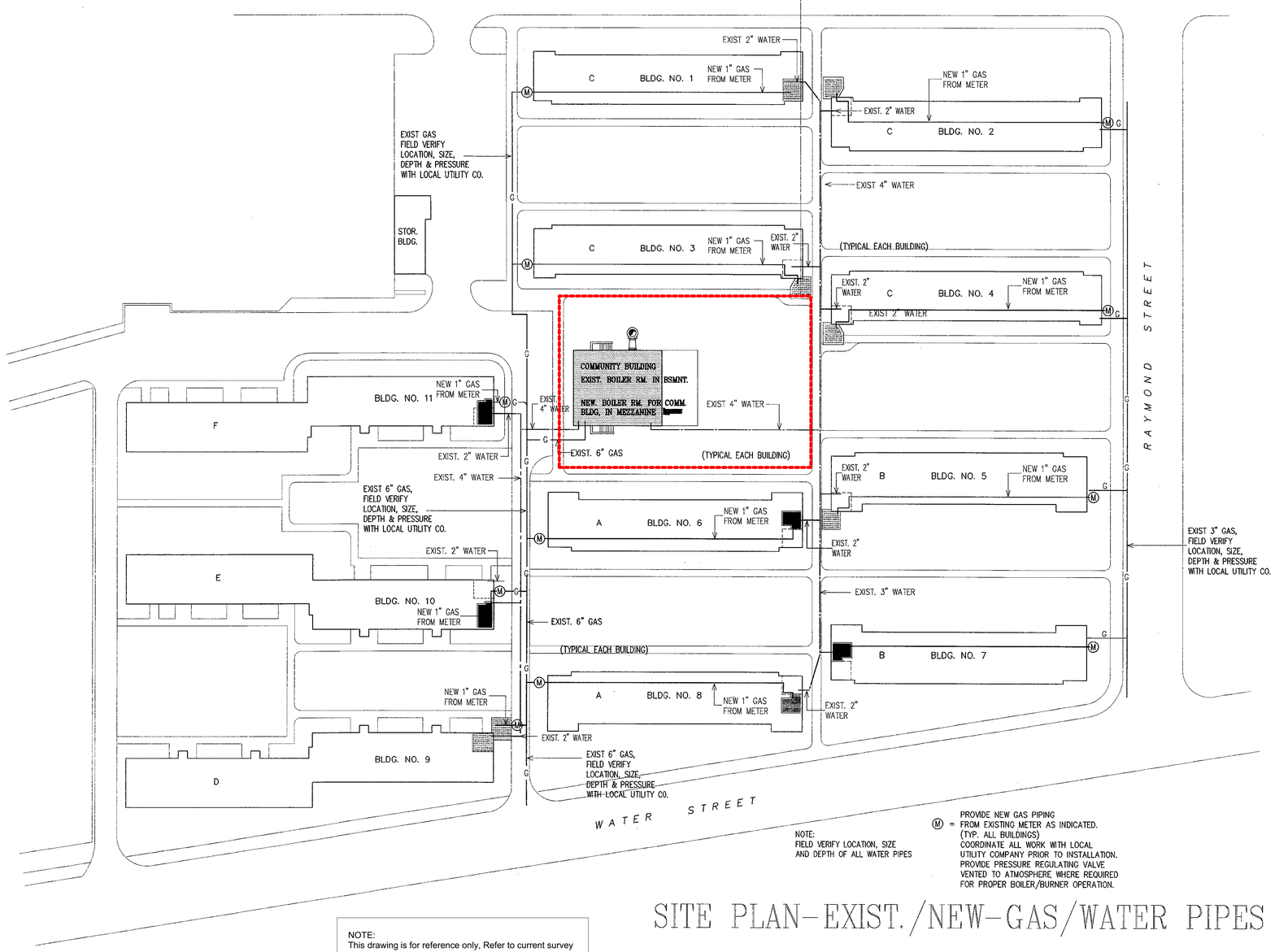

NOTE:
FIELD VERIFY LOCATION, SIZE AND DEPTH OF ALL WATER PIPES

(M) = PROVIDE NEW GAS PIPING FROM EXISTING METER AS INDICATED. (TYP. ALL BUILDINGS) COORDINATE ALL WORK WITH LOCAL UTILITY COMPANY PRIOR TO INSTALLATION. PROVIDE PRESSURE REGULATING VALVE VENTED TO ATMOSPHERE WHERE REQUIRED FOR PROPER BOILER/BURNER OPERATION.

SITE PLAN–EXIST./NEW–GAS/WATER PIPES

SCALE: 1"=30'–0"

NOTE:
This drawing is for reference only, Refer to current survey plan.

WASHINGTON VILLAGE COMMUNITY CENTER

PHASE 1
DEMOLITION

PERMIT/PRICING SEPT 15, 2014

EXISTING CONDITIONS PLAN - NOT VERIFIED BY OWNER
CONTRACTOR SHALL VERIFY ALL EXISTING CONDITIONS PRIOR TO PROCEEDING WITH THE WORK

FILE NAME:
REVISION NO.: 1
REVISED BY: 1
REVISION DATE: –
PLOT DATE: 1

Copyright 1997 by PAE&E Group Inc., all rights reserved. Drawn in the United States of America.

All ideas, designs, arrangements, and plans indicated or represented by this drawing are owned by and property of PAE&E Group Inc. and were created, evolved and developed for use on and in connection with the specified project. None of such ideas, designs, arrangements or plans shall be used by or disclosed to any person, firm, or corporation for any purpose whatsoever without the written permission of PAE&E Group Inc. Written dimensions on these drawings shall have precedence over scaled dimensions. Contractor shall verify, and be responsible for all dimensions and conditions on the job and this office must be notified of any variations from the dimensions and conditions shown by these drawings.

Contractor shall do all cutting, patching, repairing and cleaning necessary to complete all work shown on these drawings.

Owner's Approval: CONSTRUCTION DOCUMENT PHASE

Signature _____ Date _____

PRINT NAME & TITLE

NO.	DATE	ISSUE	BY
	7/6/2001	ISSUED FOR BIDDING	MDP

PAE&E GROUP INC.
ARCHITECTURE • ENGINEERING • PLANNING • ENVIRONMENTAL SERVICES
39 CHURCH STREET NEW HAVEN, CONNECTICUT 06510 (203) 946 2000

PROJECT TITLE

ASSESSMENT OF EXIST. BOILERS AND EQUIPMENT
AT
WASHINGTON VILLAGE APARTMENTS
RAYMOND AND DAY STREETS
SOUTH NORWALK, CONNECTICUT
FOR
THE HOUSING AUTHORITY OF THE CITY OF NORWALK

DRAWING TITLE

SITE PLAN
EXIST./NEW–GAS/WATER PIPES

DATE 5/13/2001

SCALE 1"=30'–0"

PROJECT NO. 110800

DRAWING NO. ST–2

STATE OF CONNECTICUT · MARIO PANICONI · No. 3147 · REGISTERED ARCHITECT

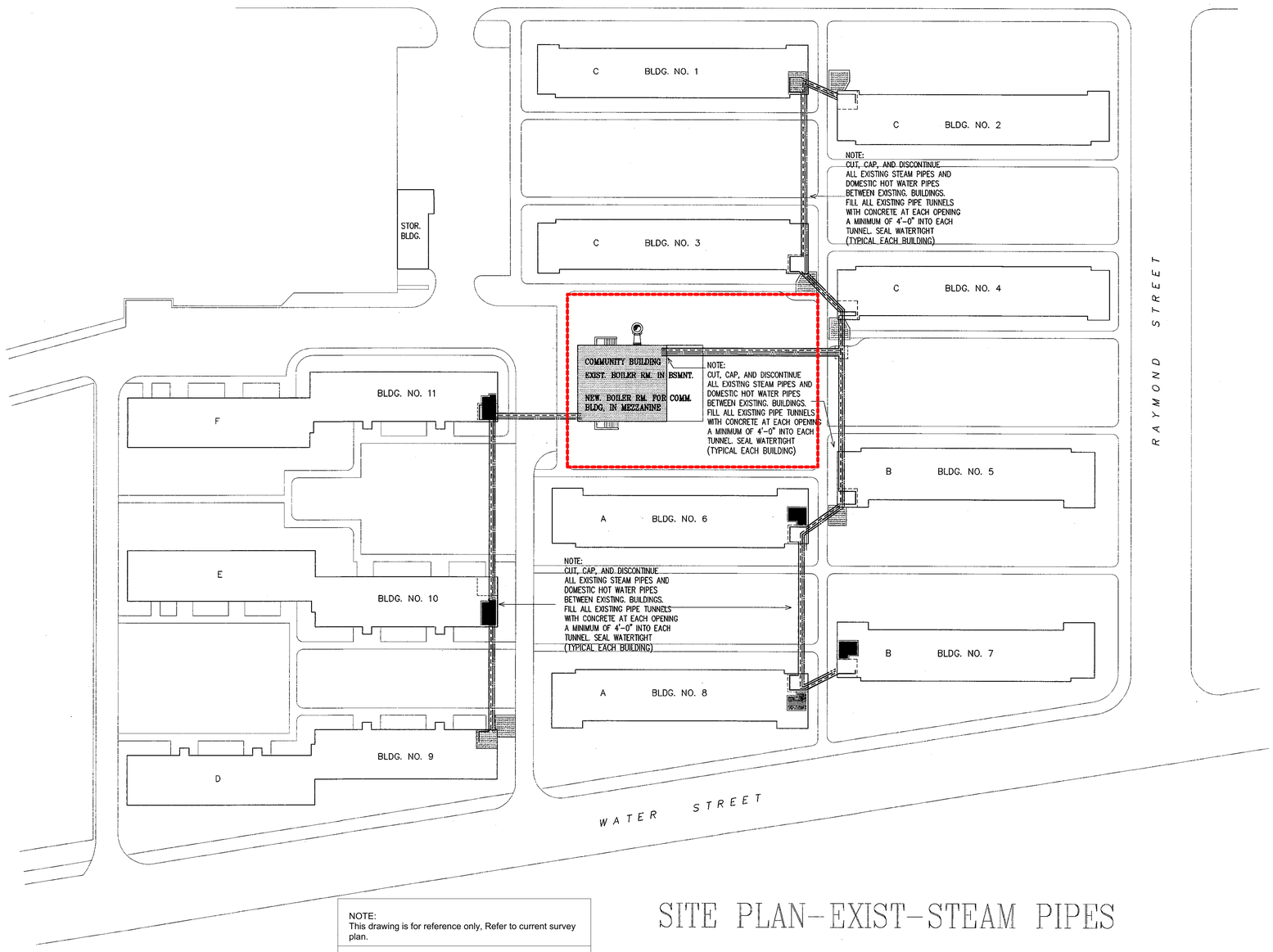

SITE PLAN-EXIST-STEAM PIPES

SCALE: 1"=30'-0"

NOTE:
This drawing is for reference only, Refer to current survey plan.

WASHINGTON VILLAGE COMMUNITY CENTER

PHASE 1
DEMOLITION

PERMIT/PRICING SEPT 15, 2014

EXISTING CONDITIONS PLAN - NOT VERIFIED BY OWNER
CONTRACTOR SHALL VERIFY ALL EXISTING CONDITIONS PRIOR TO PROCEEDING WITH THE WORK

STATE OF CONNECTICUT
MARIO PANICCIA
No. 3147
REGISTERED ARCHITECT

FILE NAME:
REVISION No.: -
REVISED BY: -
REVISION DATE: -
PLOT DATE: -

Copyright 1997 by PAE&E Group Inc., all rights reserved. Drawn in the United States of America.

All ideas, designs, arrangements, and plans indicated or represented by this drawing are owned by and property of PAE&E Group Inc. and were created, evolved and developed for use on and in connection with the specified project. None of such ideas, designs, arrangements or plans shall be used by or disclosed to any person, firm, or corporation for any purpose whatsoever without the written permission of PAE&E Group Inc. Written dimensions on these drawings shall have precedence over scaled dimensions. Contractor shall verify and be responsible for all dimensions and conditions on the job and this office must be notified of any variations from the dimensions and conditions shown by these drawings.

Contractor shall do all cutting, patching, repairing and cleaning necessary to complete all work shown on these drawings.

Owner's Approval: CONSTRUCTION DOCUMENT PHASE

Signature _____ Date _____

PRINT NAME & TITLE

NO.	DATE	ISSUE	BY
	7/6/2001	ISSUED FOR BIDDING	MDP

PAE&E GROUP INC.
ARCHITECTURE • ENGINEERING • PLANNING • ENVIRONMENTAL SERVICES
39 CHURCH STREET NEW HAVEN, CONNECTICUT 06510 (203) 946 2000

PROJECT TITLE

ASSESSMENT OF EXIST. BOILERS AND EQUIPMENT AT WASHINGTON VILLAGE APARTMENTS

RAYMOND AND DAY STREETS
SOUTH NORWALK, CONNECTICUT

FOR

THE HOUSING AUTHORITY OF THE CITY OF NORWALK

DRAWING TITLE

SITE PLAN
EXIST. STEAM PIPES

DATE 5/13/2001

SCALE 1"=30'-0"

PROJECT NO. 110800

DRAWING NO. ST-3

NOTES:

1.) ALL PIPING IS SCHEDULE 40.

2.)TO PREVENT CONDENSATE FROM BEING TRAPPED IN HEADER, DO NOT REDUCE HEADER DRIP ELBOW AT HEADER CONNECTION. REDUCTION CAN BE MADE BELOW N.W.L.

3.) CONTRACTOR SHALL PROVIDE BALL VALVE.
- MINIMUM VALVE SIZE PER ASME CODE: 3/4" NPT 903A/905A; 1" NPT 906A/V910A;
- 1-1/2" NPT 911A/912A.
- THE VALVE SIZE SHALL BE INCREASED TO IMPROVE THE BLOWDOWN OPERATION.
- IN ALL CASES, PIPING CONNECTION BLOWOFF VALVE TO BOILER SHOULD BE FULL SIZE TO THE POINT OF DISCHARGE.E

4.) DRAWING DEPICTS PUMPED RETURN (CAN BE REDUCED TO EQUAL BOILER FEED CONNECTION). IF GRAVITY , INSTALL HARTFORD LOOP.

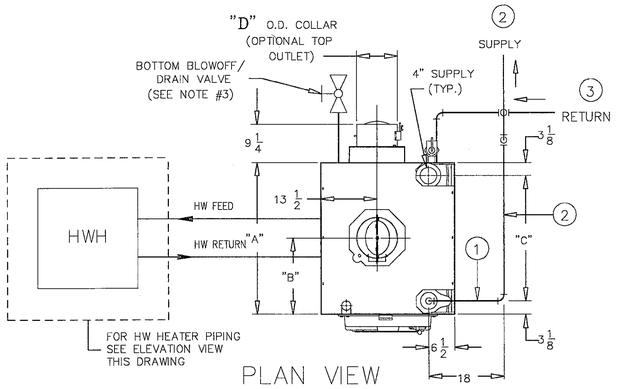

PLAN VIEW

NO SCALE

BOILER MODEL	"A"	"B"	"C"	"D"	PIPING SIZE IN INCHES			
					RISER (QTY.) SIZE (1)	HEADER & SUPPLY (2)	RETURN (3)	HEADER DRIP (4)
V906A	36 "	18 1/8"	30"	8"	(1) 4"	4"	2 "	2 "

CAST IRON STEAM BOILER AS MFG. BY BURNHAM CORPORATION LANCASTER PA. MODEL NO. V-906A

TRAP PRIMER NOTE: (TP)

PROVIDE FLOOR DRAINS FOR ALL NEW BOILER ROOMS
PROVIDE TRAP PRIMER ON ALL FLOOR DRAINS.
PROVIDE 1/2" COLD WATER FROM BOILER MAKE-UP WATER SUPPLY TO TRAP PRIMER VALVE. PROVIDE SELF ADJUSTING AUTOMATIC TRAP PRIMER AND DISTRIBUTION UNIT COMPLETE WITH CORROSION RESISTANT BRASS FITTINGS WITH A COPPER RESERVOIR, CLEAR PLASTIC INSPECTION COVER ON RESERVOIR. PROVIDE MOUNTING BRACKETS. PROVIDE 1/2" COLD WATER PIPE IN SLAB TO FLOOR DRAIN (TYP. FOR ALL FLOOR DRAINS). FOR TYPICAL SANITARY AND COLD WATER CONNECTIONS TO FLOOR DRAIN SEE DRAWING P-1.

NOTES:

1. INSTALLERS OF THE NEW STEAM BOILERS AND THE NEW HOT WATER SYSTEMS. SHALL BE LICENSED TO PERFORM STEAM BOILER AND PIPING WORK AND WORK REQUIRED TO INSTALL THE HOT WATER SYSTEM, BY THE STATE OF CONNECTICUT.

2. INSTALLERS SHALL ALSO HAVE A MINIMUM OF 5 YEARS EXPERIENCE IN THE WORK REQUIRED FOR THIS PROJECT AND AS DESCRIBED ABOVE.

PROVIDE THE FOLLOWING CONTROL TAPPINGS:

1. 4" SUPPLY
2. 3" RETURN
3. 1 1/2" SAFETY VALVE
4. 1 1/2" CROWN INSPECTION / WASHOUT (SPECIAL ORDER)
5. 1" FLOAT L.W.C.O.
6. 3/4" PROBE L.W.C.O.
7. 3/4" AUXILIARY PROBE L.W.C.O. (SPECIAL ORDER)
8. 3/4" PRESSURE LIMIT CONTROL
9. 3/4" AUXILIARY PRESSURE LIMIT CONTROL
10. 1/2" GAUGE GLASS
11. 1/2" STEAM GAUGE (BUSH TO 1/4")

NOTE: ITEMS NOTED AS (SPECIAL ORDER) SHALL BE ORDERED BY THE CONTRACTOR AND INCLUDED IN THE PROJECT.

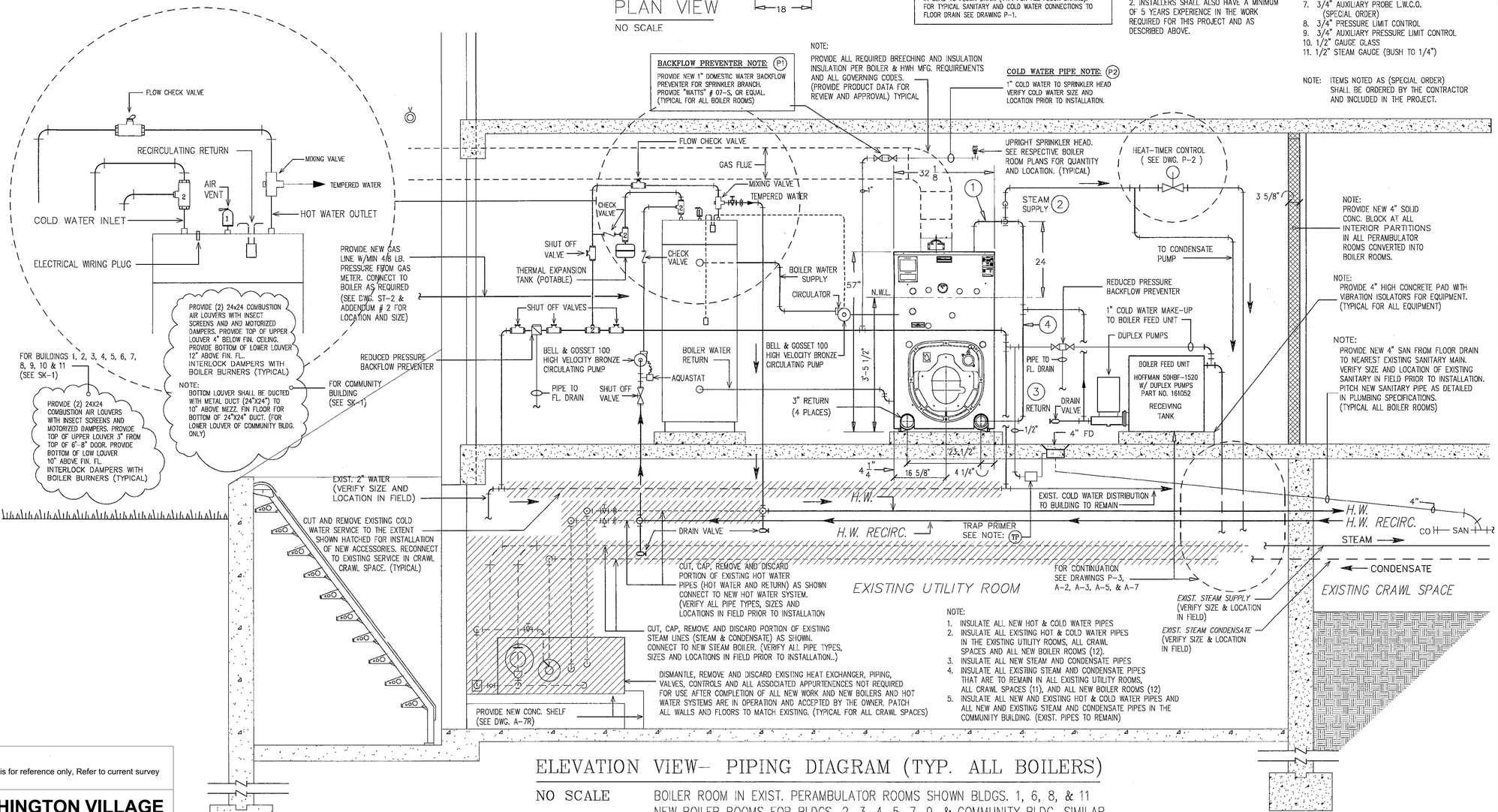

ELEVATION VIEW- PIPING DIAGRAM (TYP. ALL BOILERS)

NO SCALE

BOILER ROOM IN EXIST. PERAMBULATOR ROOMS SHOWN BLDGS. 1, 6, 8, & 11
NEW BOILER ROOMS FOR BLDGS. 2, 3, 4, 5, 7, 9, & COMMUNITY BLDG. SIMILAR

THIS DRAWING DEPICTS A GENERAL LAYOUT OF THE COMPONENTS (NOT NECESSARILY ALL INCLUSIVE) USED FOR THIS APPLICATION. THE CONTRACTOR/INSTALLER IS RESPONSIBLE FOR THE PROPER SIZING, LOCATION AND INSTALLATION OF ALL COMPONENTS REQUIRED FOR THE PROPER OPERATION OF THE HEATING & HOT WATER SYSTEM.

FILE NAME:
REVISION No.:
REVISED BY:
REVISION DATE:
PLOT DATE:

NOTE:
This drawing is for reference only, Refer to current survey plan.

WASHINGTON VILLAGE COMMUNITY CENTER

PHASE 1
DEMOLITION

PERMIT/PRICING SEPT 15, 2014

EXISTING CONDITIONS PLAN - NOT VERIFIED BY OWNER
CONTRACTOR SHALL VERIFY ALL EXISTING CONDITIONS PRIOR TO PROCEEDING WITH THE WORK

Copyright 1997 by PAGE Group Inc., all rights reserved. Drawn in the United States of America.

All ideas, designs, arrangements, and plans indicated or represented by this drawing are owned by and property of PAGE Group Inc. and were created, evolved and developed for use on and in connection with the specified project. None of such ideas, designs, arrangements or plans shall be used by or disclosed to any person, firm, or corporation for any purpose whatsoever without the written permission of PAGE Group Inc. Written dimensions on these drawings shall have precedence over scaled dimensions. Contractor shall verify and be responsible for all dimensions and conditions on the job and this office must be notified of any variation from the dimensions and conditions shown by these drawings.

Contractor shall do all cutting, patching, repairing and cleaning necessary to complete all work shown on these drawings.

Owner's Approval: CONSTRUCTION DOCUMENT PHASE

Signature _____ Date _____

PRINT NAME & TITLE

NO.	DATE	ISSUE	BY
	7/6/2001	ISSUED FOR BIDDING	MDP
2	7/27/2001	ADDENDUM # 2	MDP

PAGE GROUP INC.
ARCHITECTURE • ENGINEERING • PLANNING • ENVIRONMENTAL SERVICES
39 CHURCH STREET NEW HAVEN, CONNECTICUT 06510 (203) 946 2000

PROJECT TITLE

BOILER REPLACEMENT
AT
WASHINGTON VILLAGE APARTMENTS
RAYMOND AND DAY STREETS
SOUTH NORWALK, CONNECTICUT
FOR
THE HOUSING AUTHORITY OF THE CITY OF NORWALK

DRAWING TITLE

PIPING DIAGRAM
STEAM BOILER /
HOT WATER HEATER
BOILER MODEL NO. V-906A

DATE 5/13/2001

SCALE 1/4"=1'-0"

PROJECT NO. 110800

DRAWING NO. P-1R

1.) ALL PIPING IS SCHEDULE 40.
2.) TO PREVENT CONDENSATE FROM BEING TRAPPED IN HEADER, DO NOT REDUCE HEADER DRIP ELBOW AT HEADER CONNECTION. REDUCTION CAN BE MADE BELOW N.W.L.
3.) CONTRACTOR SHALL PROVIDE BALL VALVE.
   – MINIMUM VALVE SIZE PER ASME CODE: 3/4" NPT 903A/905A; 1" NPT 906A/V910A;
   – 1–1/2" NPT 911A/912A.
   – THE VALVE SIZE SHALL BE INCREASED TO IMPROVE THE BLOWDOWN OPERATION.
   – IN ALL CASES, PIPING CONNECTION BLOWOFF VALVE TO BOILER SHOULD BE FULL SIZE TO THE POINT OF DISCHARGE.
4.) DRAWING DEPICTS PUMPED RETURN (CAN BE REDUCED TO EQUAL BOILER FEED CONNECTION). IF GRAVITY, INSTALL HARTFORD LOOP.
5.) FOR DIMENSIONAL DATA, SEE DRAWING AE–V9A–0203.

BOILER MODEL	PIPING SIZE IN INCHES			
	RISER (DTY.) SIZE	HEADER & SUPPLY	RETURN	HEADER DRIP
	(1)	(2)	(3)	(4)
V906A	(1) 4"	4"	2 "	2 "

△2

CAST IRON STEAM BOILER AS MANUFATURED BY BURNHAM CORPORATION

LANCASTER PA. MODEL NO. V–906A

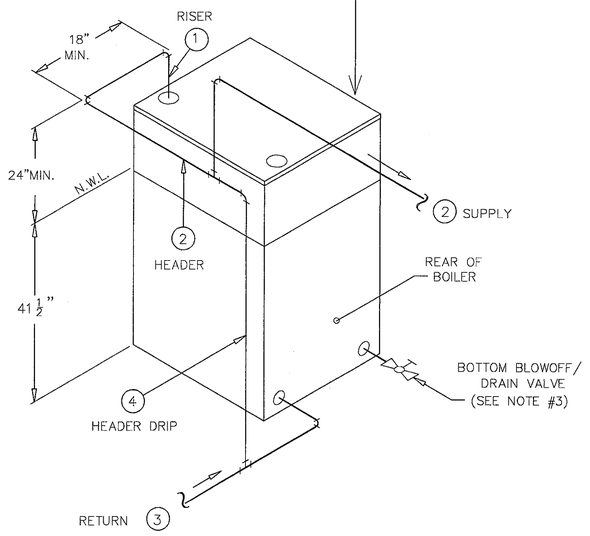

ISOMETRIC VIEW

NOT TO SCALE

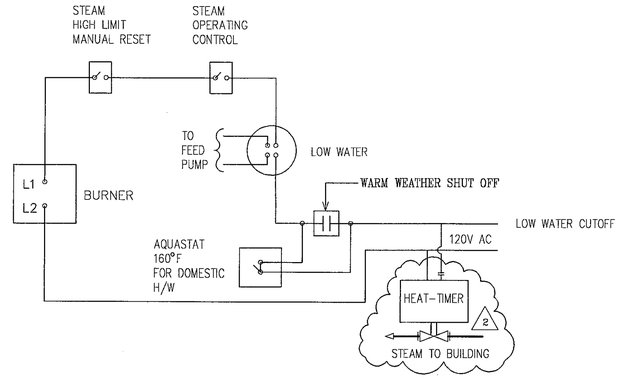

SCHEMATIC DIAGRAM STEAM CONTROL

NO SCALE

NOTE:
This drawing is for reference only, Refer to current survey plan.

WASHINGTON VILLAGE COMMUNITY CENTER

PHASE 1
DEMOLITION

PERMIT/PRICING SEPT 15, 2014

EXISTING CONDITIONS PLAN - NOT VERIFIED BY OWNER
CONTRACTOR SHALL VERIFY ALL EXISTING CONDITIONS PRIOR TO PROCEEDING WITH THE WORK

THIS DRAWING DEPICTS A GENERAL LAYOUT OF THE COMPONENTS (NOT NECESSARILY ALL INCLUSIVE) USED FOR THIS APPLICATION. THE CONTRACTOR/INSTALLER IS RESPONSIBLE FOR THE PROPER SIZING, LOCATION AND INSTALLATION OF ALL COMPONENTS REQUIRED FOR THE PROPER OPERATION OF THE HEATING & HOT WATER SYSTEM.

FILE NAME: –
REVISION No.: –
REVISED BY: –
REVISION DATE: –
PLOT DATE: –

Copyright 1997 by PAE&E Group Inc., all rights reserved. Drawn in the United States of America.

All ideas, designs, arrangements, and plans indicated or represented by this drawing are owned by and property of PAE&E Group Inc. and were created, evolved and developed for use on and in connection with the specified project. None of such ideas, designs, arrangements or plans shall be used by or disclosed to any person, firm or corporation for any purpose whatsoever without the written permission of PAE&E Group Inc. Written dimensions on these drawings shall have precedence over scaled dimensions. Contractor shall verify and be responsible for all dimensions and conditions on the job and this office must be notified of any variations from the dimensions and conditions shown by these drawings.

Contractor shall do all cutting, patching, repairing and cleaning necessary to complete all work shown on these drawings.

Owner's Approval: CONSTRUCTION DOCUMENT PHASE

Signature _____ Date _____

PRINT NAME & TITLE

NO.	DATE	ISSUE	BY
	7/6/2001	ISSUED FOR BIDDING	MDP
△2	7/27/2001	ADDENDUM # 2	MDP

PAE&E GROUP INC.
ARCHITECTURE • ENGINEERING • PLANNING • ENVIRONMENTAL SERVICES
39 CHURCH STREET NEW HAVEN, CONNECTICUT 06510 (203) 946 2000

PROJECT TITLE

BOILER REPLACEMENT
AT
WASHINGTON VILLAGE APARTMENTS
RAYMOND AND DAY STREETS
SOUTH NORWALK, CONNECTICUT
FOR
THE HOUSING AUTHORITY OF THE CITY OF NORWALK

DRAWING TITLE

MINIMUM PIPING RECOMMENDATIONS SINGLE/STEAM/ISOMETRIC BOILER MODEL NO. V–906A

DATE
5/13/2001

SCALE
1/4"=1'–0"

PROJECT NO.
110800

DRAWING NO.
P–2R

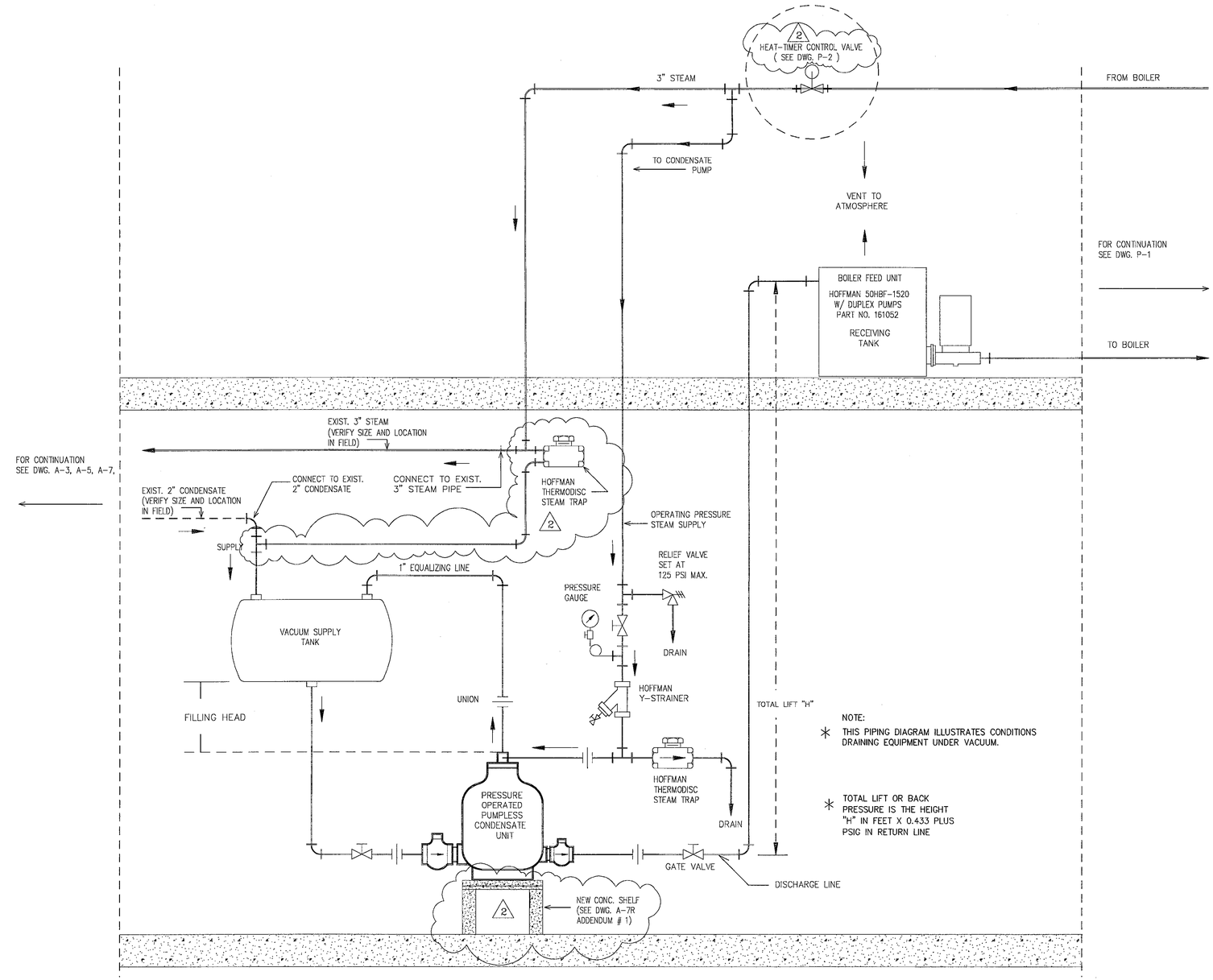

NOTE:
This drawing is for reference only, Refer to current survey plan.

WASHINGTON VILLAGE COMMUNITY CENTER

PHASE 1
DEMOLITION

PERMIT/PRICING SEPT 15, 2014

PIPING DIAGRAM PRESSURE OPERATED PUMPLESS CONDENSATE UNIT/VAC CONDITIONS

NO SCALE

EXISTING CONDITIONS PLAN - NOT VERIFIED BY OWNER
CONTRACTOR SHALL VERIFY ALL EXISTING CONDITIONS PRIOR TO PROCEEDING WITH THE WORK

THIS DRAWING DEPICTS A GENERAL LAYOUT OF THE COMPONENTS (NOT NECESSARILY ALL INCLUSIVE) USED FOR THIS APPLICATION. THE CONTRACTOR/INSTALLER IS RESPONSIBLE FOR THE PROPER SIZING, LOCATION AND INSTALLATION OF ALL COMPONENTS REQUIRED FOR THE PROPER OPERATION OF THE HEATING & HOT WATER SYSTEM.

FILE NAME:
REVISION No.: --
REVISED BY: --
REVISION DATE: --
PLOT DATE: --

Copyright 1997 by PAE&E Group Inc., all rights reserved. Drawn in the United States of America.

All ideas, designs, arrangements, and plans indicated or represented by this drawing are owned by and property of PAE&E Group Inc. and were created, evolved and developed for use on and in connection with the specified project. None of such ideas, designs, arrangements or plans shall be used by or disclosed to any person, firm, or corporation for any purpose whatsoever without the written permission of PAE&E Group Inc. Written dimensions on these drawings shall have precedence over scaled dimensions. Contractor shall verify and be responsible for all dimensions and conditions on the job site. This office must be notified of any variations from the dimensions and conditions shown by these drawings.

Contractor shall do all cutting, patching, repairing and cleaning necessary to complete all work shown on these drawings.

Owner's Approval: CONSTRUCTION DOCUMENT PHASE

Signature _____ Date _____

PRINT NAME & TITLE

NO.	DATE	ISSUE	BY
	7/6/2001	ISSUED FOR BIDDING	MDP
2	7/27/2001	ADDENDUM # 2	MDP

PAE&E GROUP INC.
ARCHITECTURE • ENGINEERING • PLANNING • ENVIRONMENTAL SERVICES
39 CHURCH STREET NEW HAVEN, CONNECTICUT 06510 (203) 946 2000

PROJECT TITLE

BOILER REPLACEMENT
AT
WASHINGTON VILLAGE APARTMENTS
RAYMOND AND DAY STREETS
SOUTH NORWALK, CONNECTICUT
FOR
THE HOUSING AUTHORITY OF THE CITY OF NORWALK

DRAWING TITLE

PIPING DIAGRAM
PRESSURE OPERATED
PUMPLESS CONDENSATE
VAC CONDITIONS

DATE 5/13/2001

SCALE 1/4"=1'-0"

PROJECT NO. 110800

DRAWING NO. P-3R

Washington Village Community Space

GENERAL SPECIFICATION NOTES:

DEMOLITION

(1) All posts and railings are to be removed from three sides of the existing outside deck area leaving the stone cap exposed for placing new wall construction.

(2) Remove or provide for the relocation or extension of all mechanical and electrical devices on the north wall of the existing structure facing the proposed building area.

(3) Remove all existing windows on the north wall and patch with block and plaster allowing for the placement of mechanical exhaust systems.

(4) Cut new opening from the existing structure into the new area as shown on the contract documents, to include an existing window and door in that location.

MASONRY WORK

(1) Provide a three wall basic enclosure of concrete block masonry as indicated on the contract documents using the following material: Concrete block masonry to be "Brick Face Pattern" light weight units ASTM Spec. C-331 and C-90 placed in a 1/4-3/4 running bond pattern with both flushed and raked joints to provide overall brick pattern.

(2) Mortar to be standard gray cement, lime and sand mixture.

(3) Provide Dur-O-Wall at every second horizontal course.

(4) Provide 4" concrete pad with rough brushed top surface at grade for stair landing, on 6" porous stone fill.

(5) Provide precast 4" slabs for sloping sills with heavy mesh reinforcing.

ROOF STRUCTURE

Joists to be special wood type as manufactured by Truss Joist Corp. of Ramsey, New Jersey, placed on wood bearing with required pitch as detailed. Structure to have metal "X" bridging at center span and continuous 2x6 cross runners solidly nailed across bottom cords at mid-point and at both quarter points.

ROOF DECK

(1) Roof decking to be 3/4 waterproof grade exterior plywood type A-D with A surface exposed on bottom side. Nailing to be on 6" centers with metal plywood clips two feet on center at unsupported joints.

(2) Roof insulation to be 2" rigid type non-absorbtive board placed in mastic directly on roof decking.

INTERIOR WALL FINISH

All exposed interior block surfaces to have applied metal furring strips with one inch of rigid styrofoam insulation and 5/8 fire code sheetrock. All sheetrock surfaces to be taped and with three coat spackle sanded and ready for painting.

FLOORING

(1) New floor structure to be 3/4" plywood sub flooring on 2x4 sleepers on existing slab.

(2) All work to be shimmed level from existing slab.

(3) Finished to be 12x12 Vinyl asbestos tile 1/8" gauge.

(4) Provide rubber tread saddle across full width of entrance opening.

(5) Provide 4" Vinyl asbestos base on all walls.

DOORS

Exterior door to be class "B" 1 3/4" hollow metal in metal buck with 1 1/2 pair heavy duty butts and overhead closer. Door to be equiped with panic hardware and exposed vertical top and bottom latching bolt.

WINDOWS

All window units to be Acorn series 2200 anodized aluminum sliding units with tempered double glazing. Specification AAMA. Unit to be submitted for architect's approval.

ROOFING

Roof to be 5 ply built-up tar and gravel 20 year type, applied to rigid insulation. All exposed flashing to be dark anodized aluminum equivilant to 20 gauge, with butt joints and concealed joint sleeve at approximate 8' intervals. Provide scuppers at low end of pitch for roof drainage.

STAIR

Exterior stair to be fabricated of steel with checkered plate landing and solid stock checkered treads. All details to be in accordance with detailed drawings.

CAULKING

All joints between metal (door frames/windows) and masonry to be caulked with dark matching silicone type caulking.

PAINTING

(1) All exterior block surfaces to be coated with "Modac" water replellant special coating. Alternate pricing is to be taken for additional coating on the entire existing building exterior.

(2) All drywall surfaces to receive two coats of Alkyd flat enamel applied with a mohair roller. Alternate pricing to be taken for painting entire interior of existing structure.

(3) Exterior door and other metal work to receive two coats of prime and high gloss Derusto enamel.

(4) Wood trusses and roof deck to be painted with two coats of class A fire retardent paint applied in accordance with the manufacturer's recommendation for application.

ELECTRICAL

All new electrical work is to be extended from existing service with three switched interior lighting circuits; two exterior lighting circuits and two convenience outlet circuits.

Lighting fixtures are to be constructed under the supervision of the architect, as detailed. Service to be 120 volt, three wire. Minimum wire size to be #12 copper.

HEATING SYSTEM

New heating to be provided by the extension of existing hot water systems and the use of hot water convectors placed below the window areas in either single or double tiers as required. System to be single zone controlled by wall mounted thermostat.

COOLING SYSTEM

New area to be air conditioned by a single roof mounted unit on existing structure and with double exposed ducts to new area. Unit capacity to be minimum of 5 tons. All exposed ducts on roof to be heavily insulated. Controls to be set up on summer-winter switch and room thermostat.

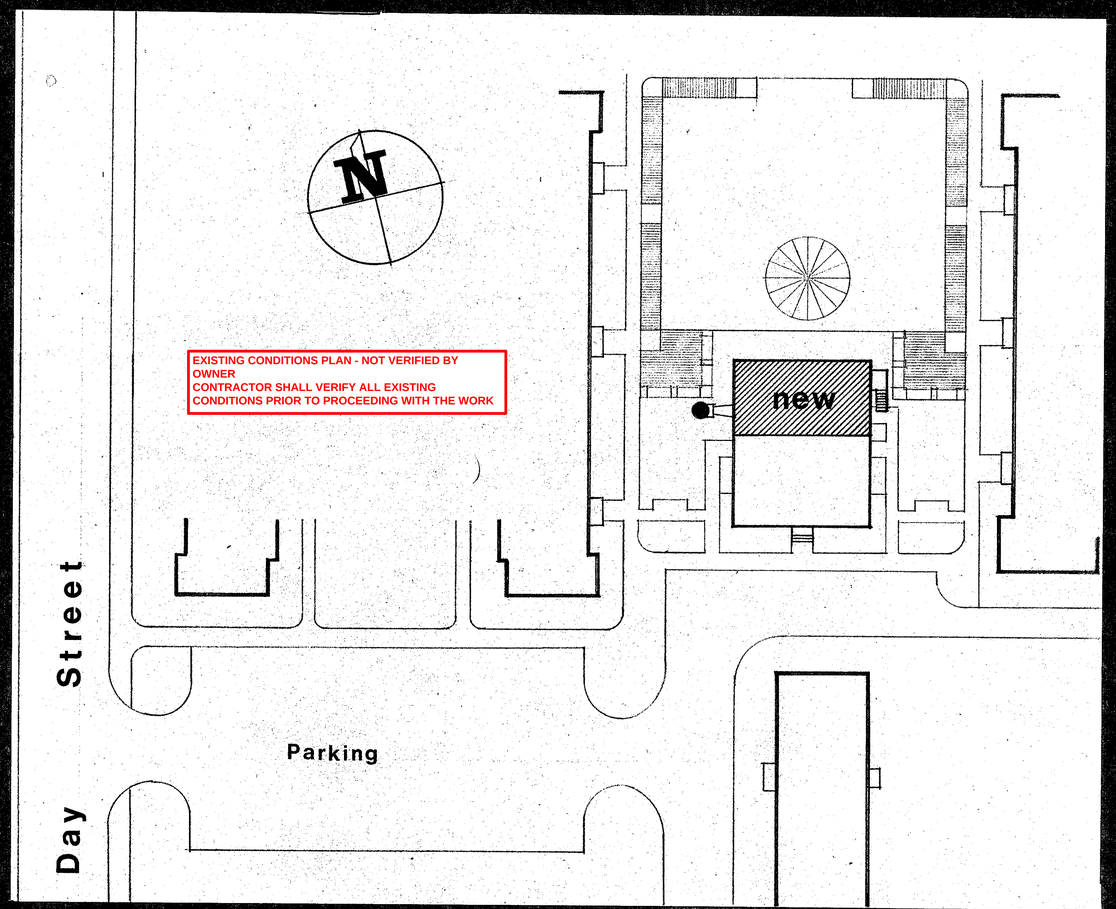

EXISTING CONDITIONS PLAN - NOT VERIFIED BY OWNER
CONTRACTOR SHALL VERIFY ALL EXISTING CONDITIONS PRIOR TO PROCEEDING WITH THE WORK

Seal

Revisions

Consultants

Project Title
WASHINGTON VILLAGE COMMUNITY SPACE
NORWALK HOUSING AUTHORITY

Subject
SITE PLAN - SPECIFICATION

GROUP SIX
Arthur DeSalvo Jr. Architect AIA
50 Washington Street
So. Norwalk Connecticut 06854

Date 8-22-74
Scale 1"=20'-0"
Job No. 74-19

A1

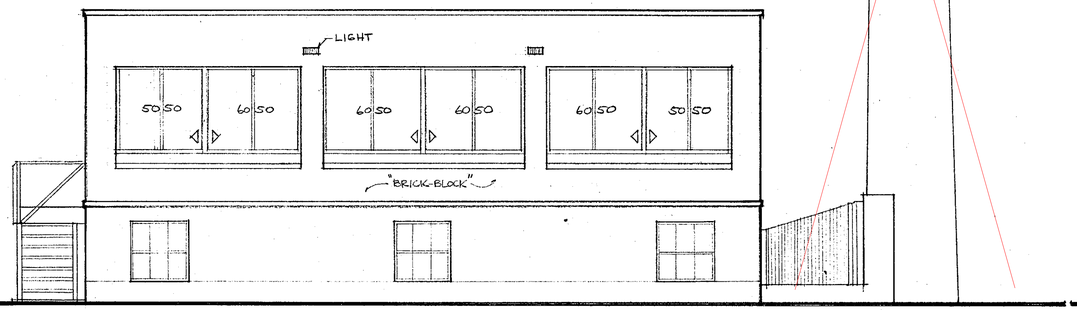

NORTH

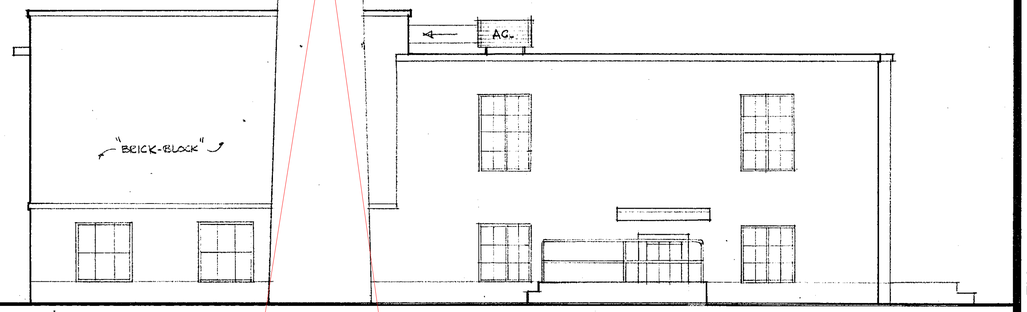

WEST

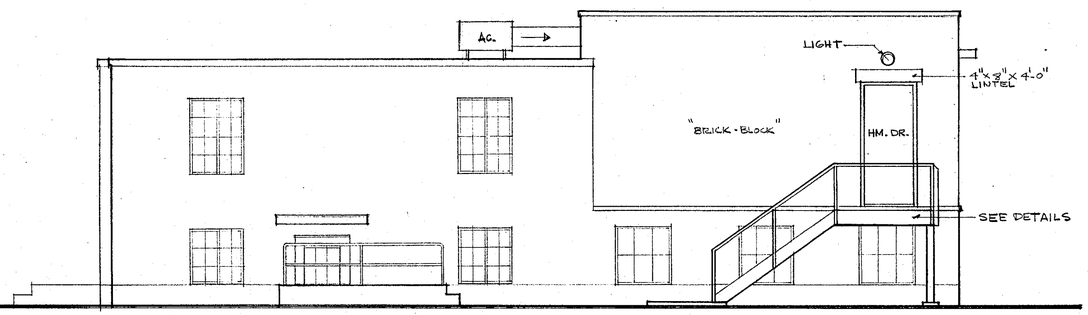

EAST

NB: CHIMNEY STACK AND BREECHING HAS BEEN DEMOLISHED

NOTE:
This drawing is for reference only, Refer to current survey plan.

WASHINGTON VILLAGE COMMUNITY CENTER

PHASE 1
DEMOLITION

PERMIT/PRICING SEPT 15, 2014

EXISTING CONDITIONS PLAN - NOT VERIFIED BY OWNER
CONTRACTOR SHALL VERIFY ALL EXISTING CONDITIONS PRIOR TO PROCEEDING WITH THE WORK

Seal

Revisions

Consultants

Project Title: WASHINGTON VILLAGE COMMUNITY SPACE
NORWALK HOUSING AUTHORITY

Subject: ELEVATIONS

GROUP SIX
Arthur DeSalvo Jr. Architect AIA
50 Washington Street
So. Norwalk · Connecticut 06854

Date 8.22.14
Scale 1/4"=1'-0"
Job No. 74-19

Sheet Number A1

FIRE SAFETY NOTES:

1. HEAT DETECTOR SHALL BE LOCATED IN EXISTING BOILER RM. CONNECTED TO A FIRE HORN AUDIBLE THROUGHOUT THE BUILDING.
2. AT EXTERIOR FIRE EMERGENCY EXIT DOOR INSTALL OVER DOOR COMBINATION EXIT SIGN AND EMERGENCY LIGHTING UNIT.
3. AT INTERIOR OPENING TO EXISTING ASSEMBLY ROOM INSTALL DOUBLE FACED, LIGHTED EXIT SIGN, VISIBLE FROM BOTH SIDES
4. AT EXISTING MAIN ENTRANCE DOOR INSTALL COMBINATION EXIT SIGN AND EMERGENCY LIGHTING UNIT.
5. AT EXISTING MAIN ENTRANCE DOOR INSTALL EMERGENCY TYPE SINGLE MOTION UNLATCHING HARDWARE IN DIRECTION OF EXIT.

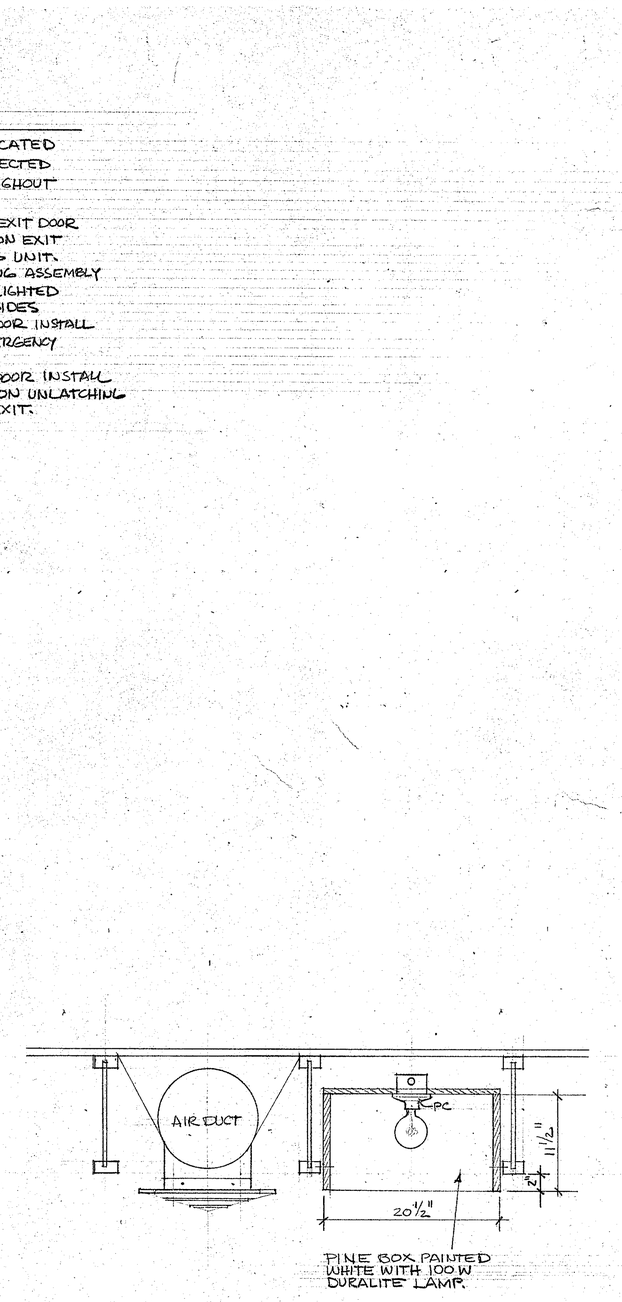

CEILING DETAIL of AIR DUCT & LIGHTING BOX.
SCALE 1½" = 1'-0"

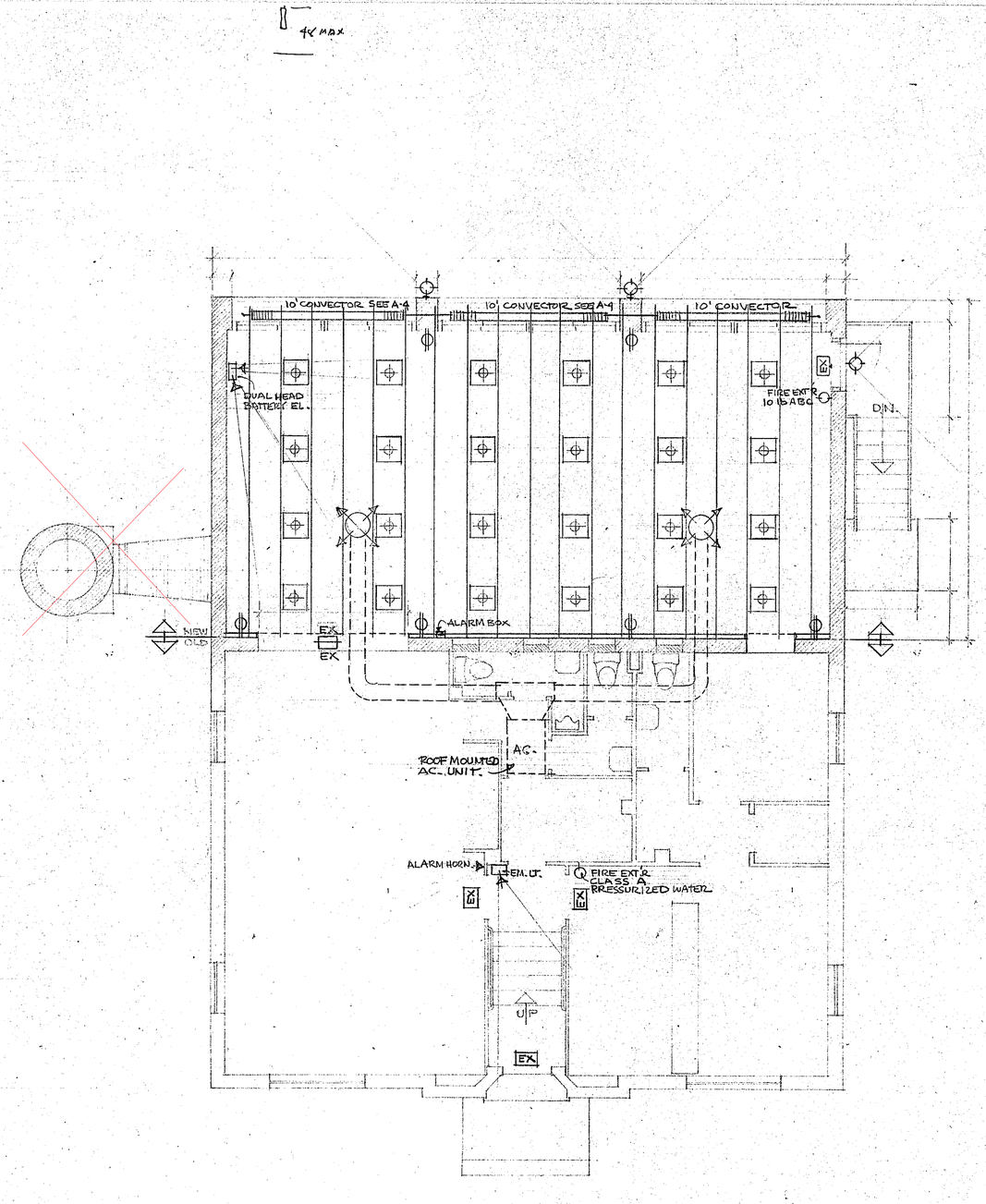

FLOOR PLAN & REFLECTED CEILING

NOTE:
This drawing is for reference only. Refer to current survey plan.

WASHINGTON VILLAGE COMMUNITY CENTER

PHASE 1
DEMOLITION

PERMIT/PRICING SEPT 15, 2014

EXISTING CONDITIONS PLAN - NOT VERIFIED BY OWNER
CONTRACTOR SHALL VERIFY ALL EXISTING CONDITIONS PRIOR TO PROCEEDING WITH THE WORK

Seal

Revisions
9/4/14

Consultants

GROUP SIX
Arthur DeSalvo Jr. Architect AIA
50 Washington Street
So. Norwalk Connecticut 06854

Project Title
WASHINGTON VILLAGE COMMUNITY SPACE
NORWALK HOUSING AUTHORITY

Subject
MECHANICAL / ELECTRICAL WORK

Date 8.22.14
Scale —
Job No. 74-19

Sheet Number F-1

HOUSING AUTHORITY OF THE CITY OF NORWALK
IN COOPERATION WITH
U.S. DEPARTMENT OF HOUSING AND URBAN DEVELOPMENT

CONTRACT DOCUMENTS FOR
REPLACEMENT OF HEATING SYSTEMS
AND HOT WATER HEATERS
AT
WASHINGTON VILLAGE APARTMENTS
SOUTH NORWALK, CONNECTICUT 06854

NORWALK HOUSING AUTHORITY
24-1/2 MONROE STREET
NORWALK, CONNECTICUT 06854

MAY, 2002

SALAMONE & ASSOCIATES P.C.

CONSULTING ENGINEERS

3035 Whitney Avenue
Hamden, Connecticut 06518

Phone: (203) 281-6895 Fax: (203) 287-8728

NOTE:
This drawing is for reference only, Refer to current survey plan.

WASHINGTON VILLAGE COMMUNITY CENTER

PHASE 1
DEMOLITION

PERMIT/PRICING SEPT 15, 2014

INDEX OF DRAWINGS

DME-1	MECHANICAL ROOM AND MEZZANINE DEMOLITION PLAN
SU-1	SITE PLAN-EXIST./NEW-GAS AND WATER PIPES
SU-2	SITE PLAN-EXIST.-STEAM PIPES
M-1	MECHANICAL ROOM AND MEZZANINE MECHANICAL PLAN
M-2	PARTIAL TUNNEL PLAN MECHANICAL ROOM PLANS BLDG. NO. 1, BLDG. NO. 2 AND BLDG. NO. 3
M-3	PARTIAL TUNNEL PLAN MECHANICAL ROOM PLANS BLDG. NO. 4, BLDG. NO. 5 AND BLDG. NO. 6
M-4	PARTIAL TUNNEL PLAN MECHANICAL ROOM PLANS BLDG. NO. 7, BLDG. NO. 8 AND BLDG. NO. 9
M-5	PARTIAL TUNNEL PLAN MECHANICAL ROOM PLANS BLDG. NO. 10, AND BLDG. NO. 11

EXISTING CONDITIONS PLAN - NOT VERIFIED BY OWNER
CONTRACTOR SHALL VERIFY ALL EXISTING CONDITIONS PRIOR TO PROCEEDING WITH THE WORK

LOCATION MAP

NB: ORIGINAL BOILERS< APPURTENANCES AND CHIMNEY STACK HAVE BEEN DEMOLISHED

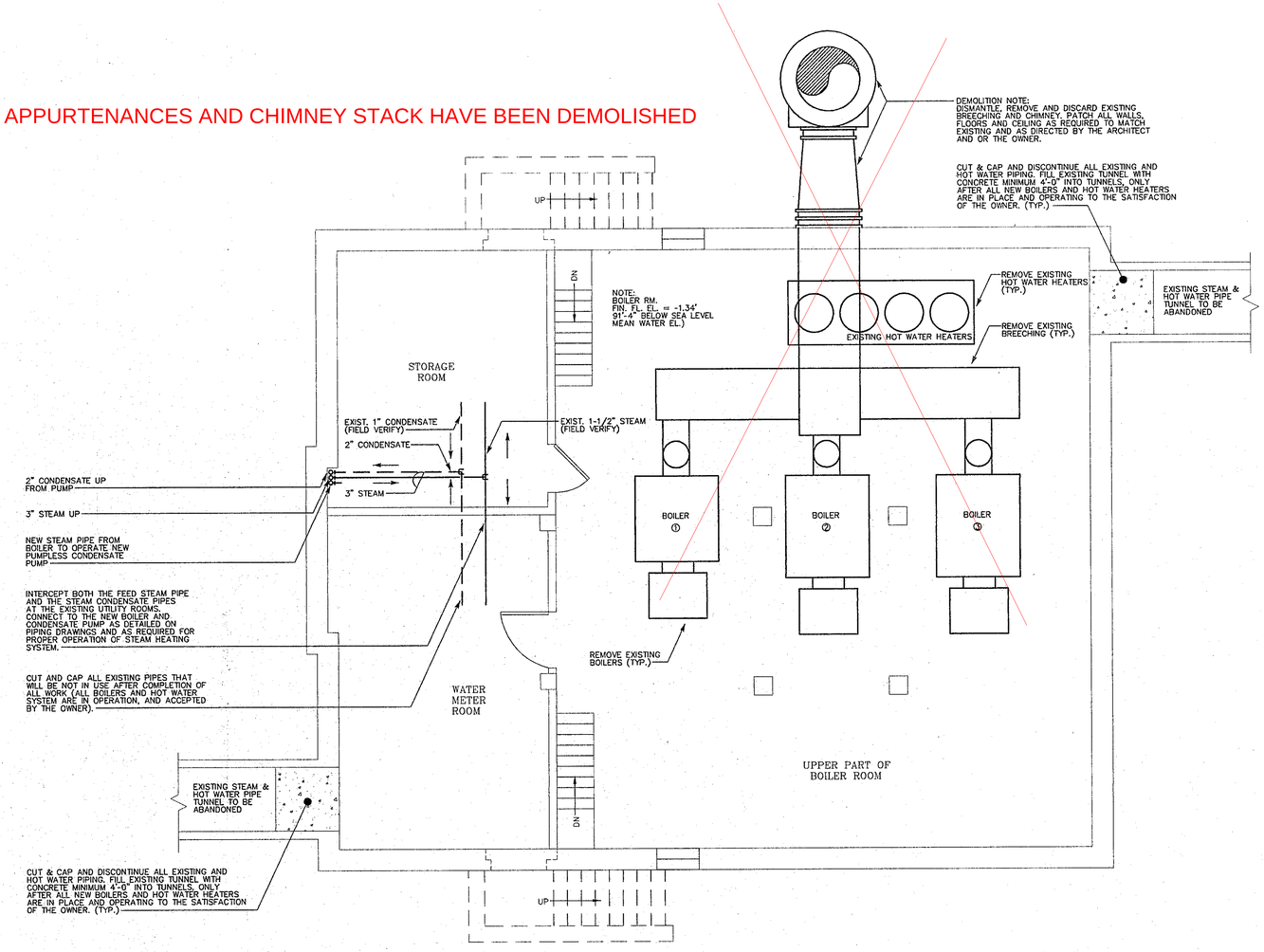

DEMOLITION NOTE:

DISMANTLE, REMOVE AND DISCARD EXISTING BOILERS, BURNERS, BREECHING, WATER HEATERS, PIPING, VALVES, CONTROLS AND ALL ASSOCIATED APPURTENANCES TO REQUIRED FOR USE AFTER COMPLETION OF ALL NEW WORK (ALL NEW BOILERS AND HOT WATER SYSTEMS ARE IN OPERATION, AND ACCEPTED BY THE OWNER), PATCH ALL WALLS, FLOORS AND CEILINGS AS REQUIRED TO MATCH EXISTING AND AS DIRECTED BY THE ARCHITECT AND OR THE OWNER.

MECHANICAL ROOM AND MEZZANINE DEMOLITION PLAN

SCALE: 1/4"=1'-0"

NOTE:
This drawing is for reference only, Refer to current survey plan.

WASHINGTON VILLAGE COMMUNITY CENTER

PHASE 1
DEMOLITION

PERMIT/PRICING SEPT 15, 2014

EXISTING CONDITIONS PLAN - NOT VERIFIED BY OWNER
CONTRACTOR SHALL VERIFY ALL EXISTING CONDITIONS PRIOR TO PROCEEDING WITH THE WORK

REVISIONS

REV.	DESCRIPTION	DATE

CONSULTANT:

SALAMONE & ASSOCIATES, P.C.

CONSULTING ENGINEERS

3035 Whitney Avenue
Hamden, Connecticut 06518
Phone: (203) 281-6895 Fax: (203) 287-8728

DISCLAIMER

THE INFORMATION INDICATED HEREWITH IS THE SOLE PROPERTY OF SALAMONE & ASSOCIATES, P.C. AND ANY REPRODUCTION BY ANY METHOD IN PART IS STRICTLY PROHIBITED WITHOUT WRITTEN PERMISSION OF SALAMONE & ASSOCIATES, P.C.

NOTES:

PROJECT TITLE

CONTRACT DOCUMENTS FOR
REPLACEMENT OF HEATING SYSTEMS
AND HOT WATER HEATERS
AT

WASHINGTON VILLAGE APARTMENTS

PROJECT# CT-2-1
NORWALK HOUSING AUTHORITY

SOUTH NORWALK, CONNECTICUT 06854

DRAWING TITLE

MECHANICAL ROOM AND MEZZANINE DEMOLITION PLAN

JOB NO.	- - -
DWN. BY	HST
CHECKED	JAS
SCALE	1/4"=1'-0"
DATE	MAY, 2002
CAD FILE	F:\WASHINGTON VILLAGE APTS/DME-1

SEAL:

DRAWING NO.

DME
-1

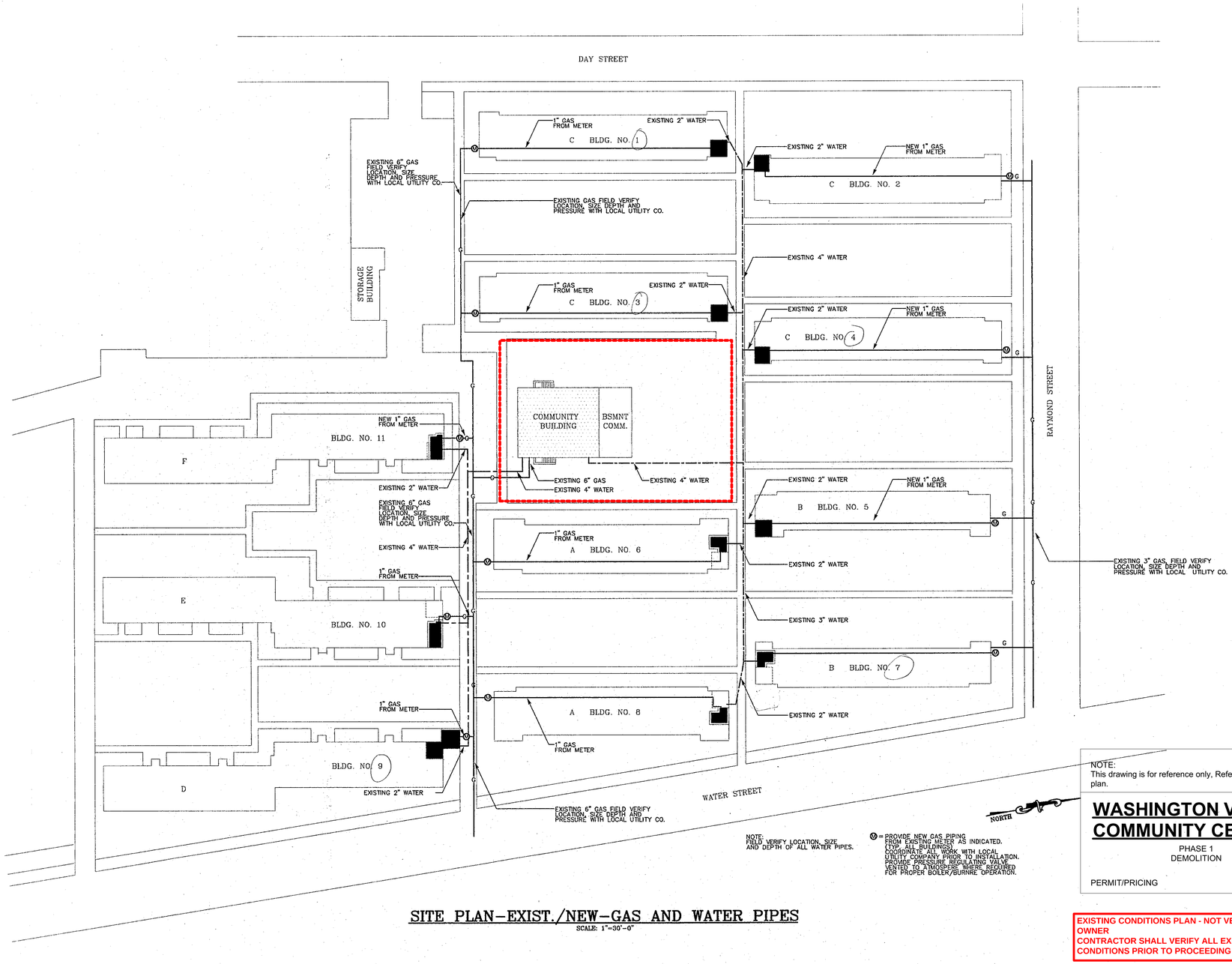

SITE PLAN–EXIST./NEW–GAS AND WATER PIPES

SCALE: 1"=30'-0"

NOTE:
This drawing is for reference only, Refer to current survey plan.

WASHINGTON VILLAGE COMMUNITY CENTER

PHASE 1
DEMOLITION

PERMIT/PRICING SEPT 15, 2014

EXISTING CONDITIONS PLAN - NOT VERIFIED BY OWNER
CONTRACTOR SHALL VERIFY ALL EXISTING CONDITIONS PRIOR TO PROCEEDING WITH THE WORK

REVISIONS

REV.	DESCRIPTION	DATE

CONSULTANT:

SALAMONE & ASSOCIATES, P.C.

CONSULTING ENGINEERS

3035 Whitney Avenue
Hamden, Connecticut 06518
Phone: (203) 281-8895 Fax: (203) 287-8728

DISCLAIMER

THE INFORMATION INDICATED HEREWITH IS THE SOLE PROPERTY OF SALAMONE & ASSOCIATES, P.C. AND ANY REPRODUCTION BY ANY METHOD IN PART IS STRICTLY PROHIBITED WITHOUT WRITTEN PERMISSION OF SALAMONE & ASSOCIATES, P.C.

NOTES:

PROJECT TITLE

CONTRACT DOCUMENTS FOR REPLACEMENT OF HEATING SYSTEMS AND HOT WATER HEATERS AT

WASHINGTON VILLAGE APARTMENTS

PROJECT# CT-2-1
NORWALK HOUSING AUTHORITY

SOUTH NORWALK, CONNECTICUT 06854

DRAWING TITLE

SITE PLAN-EXIST./NEW-GAS AND WATER PIPES

JOB NO.	- - -
DWN. BY	MCM
CHECKED	JS
SCALE	1"=30'-0"
DATE	MAY, 2002
CAD FILE	F:\WASHINGTON VILLAGE APTS/SU-1

SEAL:

DRAWING NO.

SU-1

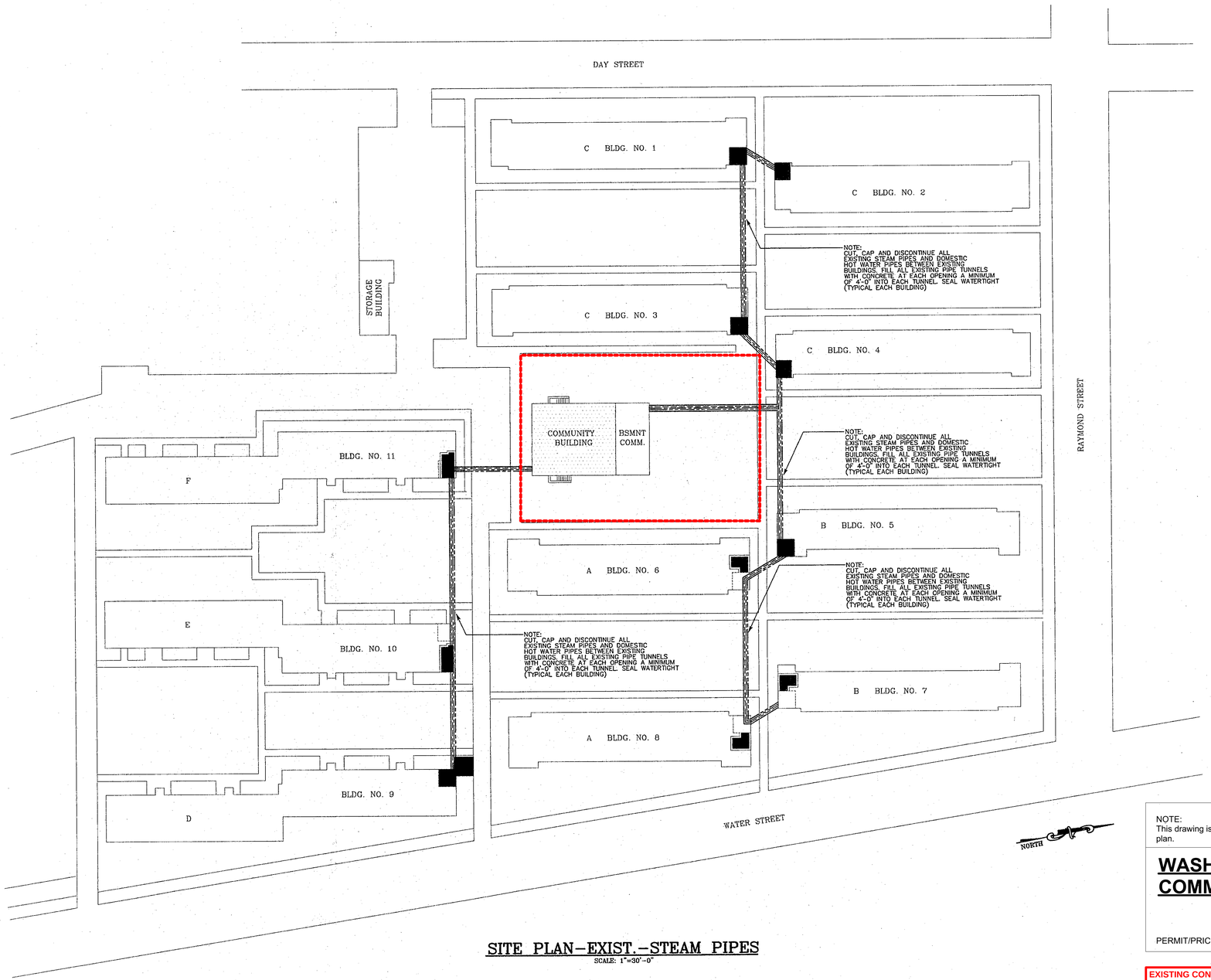

SITE PLAN–EXIST.–STEAM PIPES

SCALE: 1"=30'-0"

NOTE:
This drawing is for reference only, Refer to current survey plan.

WASHINGTON VILLAGE COMMUNITY CENTER

PHASE 1
DEMOLITION

PERMIT/PRICING SEPT 15, 2014

EXISTING CONDITIONS PLAN - NOT VERIFIED BY OWNER
CONTRACTOR SHALL VERIFY ALL EXISTING CONDITIONS PRIOR TO PROCEEDING WITH THE WORK

REVISIONS

REV.	DESCRIPTION	DATE

CONSULTANT:

SALAMONE & ASSOCIATES, P.C.

CONSULTING ENGINEERS

3035 Whitney Avenue
Hamden, Connecticut 06518
Phone: (203) 281-6895 Fax: (203) 287-8728

DISCLAIMER

THE INFORMATION INDICATED HEREWITH IS THE SOLE PROPERTY OF SALAMONE & ASSOCIATES, P.C. AND ANY REPRODUCTION BY ANY METHOD IN PART IS STRICTLY PROHIBITED WITHOUT WRITTEN PERMISSION OF SALAMONE & ASSOCIATES, P.C.

NOTES:

PROJECT TITLE

CONTRACT DOCUMENTS FOR REPLACEMENT OF HEATING SYSTEMS AND HOT WATER HEATERS AT

WASHINGTON VILLAGE APARTMENTS

PROJECT# CT-2-1
NORWALK HOUSING AUTHORITY

SOUTH NORWALK, CONNECTICUT 06854

DRAWING TITLE

SITE PLAN-EXIST.-STEAM PIPES

JOB NO.	- - -
DWN. BY	MCM
CHECKED	JS
SCALE	1"=3'-0"
DATE	MAY, 2002
CAD FILE	F:\WASHINGTON VILLAGE APTS/SU-2

SEAL:

DRAWING NO.

SU-2

EXISTING CONDITIONS PLAN - NOT VERIFIED BY OWNER
CONTRACTOR SHALL VERIFY ALL EXISTING CONDITIONS PRIOR TO PROCEEDING WITH THE WORK

HOUSING AUTHORITY OF THE CITY OF NORWALK

SITE IMPROVEMENTS

MODERNIZATION OF WASHINGTON VILLAGE HOUSING PROJECT CONN. 2-1

MAY, 1983

SCHEDULE OF DRAWINGS

TITLE SHEET	1
EXISTING CONDITIONS - PERIMETER FENCE & LANDSCAPING	2
ENLARGED PLAN - UNITS C-1/C-3 & UNITS C-2/C-4	3
ENLARGED PLAN - UNITS C-3/A-6 & UNITS C-4/B-5	4
ENLARGED PLAN - UNITS A-6/A-8 & UNITS B-5/B-7	5
ENLARGED PLAN - UNITS F-11/E-10 & E-10/D-9	6
PAVILION AND SITE DETAILS	7
SITE DETAILS	8
SITE DETAILS	9
SITE DETAILS	10
LANDSCAPE DETAILS	11
ELECTRICAL PLAN AND DETAILS	12

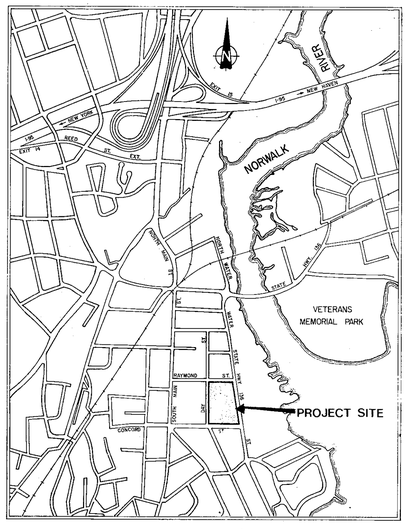

HOUSING AUTHORITY OF THE CITY OF NORWALK

COMMISSIONERS

HEATHER A. RODIN	CHAIRPERSON
SHALE L. TULIN	VICE - CHAIRPERSON
BARBARA D. MURPHY	TREASURER
JANET MILLS	COMMISSIONER
DOROTHY R. NEWMAN	COMMISSIONER
CURTIS O. LAW	EXECUTIVE DIRECTOR & SECRETARY

NOTE:
This drawing is for reference only, Refer to current survey plan.

WASHINGTON VILLAGE COMMUNITY CENTER

PHASE 1
DEMOLITION

PERMIT/PRICING SEPT 15, 2014

P.R. aug 11, 1983

tpa services

85 WILLOW STREET NEW HAVEN, CONNECTICUT 06511

25

GENERAL NOTES

1. TOPOGRAPHIC SURVEY AND ELEVATIONS AS PER SURVEY BY CLARENCE BLAIR ASSOC., INC., NEW HAVEN, CT., JANUARY 1980.

2. BENCH MARK LOCATION IS INDICATED ON DWG. #2.

3. SYMBOLS LISTED UNDER "PROPOSED CONSTRUCTION" ON DWGS. #2 & #3 REFER TO WORK TO BE DONE BY THE CONTRACTOR UNDER THE CONTRACT. THESE SYMBOLS AND OTHER SPECIFIC INSTRUCTIONS ON THE DWGS. AND IN THE SPECIFICATIONS WILL BE USED TO INDICATE THE WORK TO BE DONE BY THE CONTRACTOR.

4. LOCATION OF EXISTING UTILITIES IS APPROXIMATE, AND IS BASED ON THE BEST INFORMATION AVAILABLE. LOCAL CONNECTIONS ARE NOT SHOWN. THE CONTRACTOR IS FULLY RESPONSIBLE FOR LOCATING ALL UTILITIES, WHETHER SHOWN ON THE DWGS. OR NOT AND IS FULLY LIABLE FOR ANY DAMAGE THERETO.

5. ORDERS FOR PLAY EQUIPMENT SHALL BE PLACED WITHIN 14 DAYS OF THE NOTICE TO PROCEED. COPIES OF THE ORDERS SHALL BE SUBMITTED TO THE ENGINEER WITHIN 17 DAYS OF THE NOTICE TO PROCEED.

6. REMOVALS OF EXISTING PAVEMENT, CHAIN LINK FENCE, PLAY EQUIPMENT, BENCHES, PRIVET HEDGE, STUMPS, ETC. TO BE REMOVED SHALL BE CONFIRMED IN THE FIELD WITH THE ENGINEER PRIOR TO ANY REMOVAL WORK. ALL EXISTING PAVEMENT WITHIN CONTRACT LIMIT LINES SHALL BE REMOVED EXCEPT (1) SERVICE ACCESS ROAD AND PARKING LOT ALONG SOUTHERLY BOUNDARY AND (2) BUILDING ENTRANCE WALKS ALONG DAY, RAYMOND AND WATER STREETS. TYPE "A" BENCHES ARE TO BE REMOVED & RELOCATED(SEE DWG NO.2). (SEE SPECIFICATIONS.

7. EXISTING GRADES SHALL BE MAINTAINED WHERE NEW GRADES ARE NOT SHOWN ON SITE PLANS.

8. ALL EXISTING TREES, BUSHES AND SHRUBS ARE TO REMAIN UNLESS OTHERWISE INDICATED BY THE CONTRACT DRAWINGS OR DIRECTED BY THE ENGINEER. ALL STUMPS SHALL BE REMOVED.

9. ALL EXISTING CATCH BASINS, MANHOLES AND PIPES SHALL BE CLEANED OUT. SEE SPECIFICATIONS.

10. GRASS AREAS TO BE SEEDED, SODDED OR REHABILITATED SHALL BE DETERMINED IN THE FIELD WITH THE ENGINEER PRIOR TO THE START OF THE WORK. GRASS AREAS TO BE REHABILITATED ARE LOCATED IN FRONT OF BUILDINGS ON WATER STREET AND DAY STREET. ALL OTHER AREAS TO BE SEEDED OR SODDED ARE LOCATED TO THE FRONT, REAR AND ENDS OF BUILDINGS; EXCEPTED ARE ENDS OF BUILDINGS WHERE PLANTINGS ARE INDICATED. (SEE DWGS. #3,4,5 & 6). AREA BEHIND WOOD GARDEN FENCE LOCATIONS SHALL BE TOPSOILED ONLY.

11. FINAL LOCATION OF CONCRETE BOLLARDS SHALL BE DETERMINED IN THE FIELD WITH THE ENGINEER PRIOR TO INSTALLATION.

12. FINAL LOCATION OF PICNIC TABLES AND BENCHES SHALL BE DETERMINED IN THE FIELD WITH THE ENGINEER PRIOR TO INSTALLATION.

13. CONTRACT LIMIT LINE SHALL BE THE BACK OF EXISTING CONCRETE SIDEWALK ALONG RAYMOND, DAY AND WATER STREETS AND THE CHAIN LINK FENCE WHICH RUNS ALONG THE SOUTHERLY AND EASTERLY BOUNDARY OF THE SITE.

14. ALL STORM SEWER LINES ARE TO BE INSTALLED USING INVERT ELEVATIONS. PIPE SLOPES SHOWN ARE APPROXIMATE AND ARE FOR REFERENCE USE ONLY. ALL INVERTS ARE TO BE CONFIRMED IN THE FIELD BY THE CONTRACTOR AND APPROVED BY THE ENGINEER PRIOR TO STARTING WORK.

15. [illegible] ALL WORK SHALL BE PERFORMED BY WORKERS OF THE SAME TRADES AS THE BELLINGHAM EMPLOYEES. CONTRACTOR SHALL GIVE LETTER OF NOTIFICATION TO BOTH TELE-VISION UNIONS REGARDING TO CABLE VISION AND TPA SERVICES. LETTER SHALL BE SUBMITTED AT LEAST TEN (10) DAYS PRIOR TO THE START OF WORK.

17. ALL SCORING LINES OR JOINTS IN CONCRETE PAVEMENT SHALL HAVE A UNIFORM APPEARANCE. SCORE LINES SHALL BE MADE WITH THE SAME TYPE OF TOOL THROUGH-OUT THE PROJECT. THE CONTRACTOR SHALL PROTECT NEWLY PLACED CONCRETE FROM DAMAGE AND MARRING BY WHATEVER MEANS THAT ARE NECESSARY. NO ADDITIONAL COSTS FOR THESE PROVISIONS WILL BE ALLOWED.

18. REMOVAL OF EXISTING TRASH AND GARBAGE DISPOSAL AREAS AND CONSTRUCTION OF NEW FACILITY WITHIN EACH COURT YARD AREA SHALL BE GIVEN PRIORITY BY THE CONTRACTOR. REMOVAL OF EXISTING WALLS AND COMPLETION OF CONSTRUCTION ON NEW WALLS SHALL BE KEPT TO THE SHORTEST TIME POSSIBLE. THIS PROVISION SHALL BE TAKEN INTO ACCOUNT WHEN SCHEDULING AND SEQUENCING CONSTRUCTION WITHIN EACH COURT YARD. A TEMPORARY TRASH CAN AREA SUITABLY LEVEL AND GRADED SHALL BE PROVIDED BY THE CONTRACTOR IMMEDIATELY ADJACENT TO THE EXISTING TRASH AREA DURING THE RE-CONSTRUCTION PROCESS. A PLAN FOR THIS PROVISION SHALL BE PROVIDED BY THE CONTRACTOR FOR APPROVAL OF THE ENGINEER. NO ADDITIONAL COSTS FOR THIS PROVISION WILL BE ALLOWED. THE COST OF THE PROVISION WILL BE INCLUDED IN THE CONTRACT PRICES.

(See Dwg #4 For Continuation Of Notes.)

EXISTING CONDITIONS PLAN - NOT VERIFIED BY OWNER
CONTRACTOR SHALL VERIFY ALL EXISTING CONDITIONS PRIOR TO PROCEEDING WITH THE WORK

B.M.= ELEV. 4.75 INV. 12" SANITARY SEWER PER DRAWING U-601 BY FRANK HARPER BISSELL (DEC. 1939).

82-5

FENCE MEASURED BY BARNES & WATES 10-3-89 1,061

LEGEND (This Sheet Only)

- Proposed Underground Telephone Line (Min. 2'-6" Cover)
- Perimeter Steel Fence & Conc. Bollards.
- A — 8' Bench To Be Removed And Relocated
- Picnic Table To Be Removed
- No Parking Sign Post See Detail Sht #10. Engineer To Verify All Locations And Quantities Prior To Installation. Total Of (2) Posts Are To Be Included In Base Bid.

Edge Of New Bit. Surface Course

Remove Existing Pipe Bollards And Chain, Furnish & Install Two New Concrete Bollards (See Detail Sheet) Allow To Include Attaching Chain To New Conc. Bollards.

Chain Link Fence To Remain

Remove Existing Concrete Block Curbing Wall, Furnish & Install New Concrete Trash Wall And Reinstall Existing Gate, (See Detail Dwg #3).

Furnish & Install New 1½" Bit. Conc. Surface Course To Adjust Water Gate, Catch Basin Rims & Grates.

2" Galv. Steel

Contract Limit Line

No Parking Sign Post (Typ.)

Contract Limit Line - Chain Link Fence on Southerly Property Line

Chain Link Fence To Remain

Perimeter Fence To End Adjacent To New Concrete Sidewalk (Typ.) See Dwg #3 & 4 for Proposed Edge Of Sidewalk.

INSTALL CURB @ EXIST. EDGE Contract Limit Line Bucket Existing Concrete Walk Unless Otherwise Noted

Remove All Exist. Pavement Topsoil For All Planted Areas Between All Units

NOTE: ADDL. FENCE NOT ADDL. SEE HOOK BELOW

NOT ADD'L

PLANTING SCHEDULE (THIS SHEET ONLY)

KEY	QUAN. ALT. BID	QUAN. BASE BID	BOTANICAL NAME	COMMON NAME	SIZE	SPACING	REMARKS
A	-	12	Acer saccharum	Sugar Maple	3"-3½" cal.	as indicated	B&B height of first branch not less than 6'.
B	-	28	Amelanchier canadensis	Downy Shadblow	10'-12' ht.	"	B&B heavy clumps, no more than 3 stems/clump
C	-	30	Cercis canadensis	American Redbud	6'-8' ht.	"	B&B heavy
G	16	-	Ilex glabra	Inkberry	18-24" ht.	"	B&B
H	24	-	Kalmia latifolia	Mountain Laurel	18-24" ht.	"	B&B
I	23	-	Rhododendron catawbiense Nova Zembla	Nova Zembla Rhododendron	18-24" ht.	"	B&B

NOTE: This drawing is for reference only, Refer to current survey plan.

WASHINGTON VILLAGE COMMUNITY CENTER

PHASE 1
DEMOLITION

PERMIT/PRICING SEPT 15, 2014

tpa services
Architecture Engineering Planning
[illegible] New Haven, Connecticut 06511

Engineer: D.S.S.
Draftsman: A.M.H.
Checked By: R.F.
Scale: 1"=
Date: 5/05
Project No.:
Contract No.:

MODERNIZATION OF WASHINGTON VILLAGE HOUSING PROJECT CONN. 2-1

SITE IMPROVEMENTS
EXISTING CONDITIONS
PERIMETER FENCE AND LANDSCAPING

2

PLANTING SCHEDULE (THIS SHEET ONLY)

KEY	QUAN. ALT. BID	QUAN. BASE BID	BOTANICAL NAME	COMMON NAME	SIZE	SPACING	REMARKS
B	–	24	Amelanchier canadensis	Downy Shadblow	6'- 8'ht.	as indicated	B&B heavy clumps no more than 3 stems/clump
C	4	39	Cercis canadensis	American Redbud	6'- 8'ht.	"	B&B heavy
E	–	6	Platanus acerifolia	London Planetree	3-1/2 - 4"cal.	"	B&B
D	2	16	Cornus kousa	Kousa Dogwood	5'- 6'ht.	"	B&B single stem only
	18	495	Taxus cuspidata densiformis	Dense Yew	18-24"	see sht.# 11	B&B

PLANTER WALL NOTES (SEE DETAIL DWG. #7)

1. CONCRETE WORK SHALL CONFORM TO THE AMERICAN CONCRETE INSTITUTE SPECIFICATIONS FOR STRUCTURAL CONCRETE FOR BUILDINGS (ACT 301-72, REVISED 1975).
2. REINFORCEMENT SHALL CONFORM TO A.S.T.M. A615, GRADE 60.
3. UNLESS OTHERWISE SHOWN, ALL REINFORCING IS CONTINUOUS AND SHALL BE LAPPED A MINIMUM OF 36 BAR DIAMETERS AT SPLICES AND CORNERS.
4. SUBMIT SHOP DRAWINGS ON REINFORCING STEEL.
5. FOOTINGS TO BEAR ON NATURAL UNDISTURBED SOIL FREE FROM CINDERS, ORGANICS AND OTHER DELETERIOUS MATERIALS.
6. EXPANSION JOINTS SHALL BE 1/2" WIDTH WITH PREMOLDED JOINT FILLER. EXTERIOR SURFACE OF JOINTS TO BE CAULK. ANY WALL GREATER THAN TWENTY (20) FEET IN LENGTH WILL BE PROVIDED WITH ONE EXPANSION JOINT WHICH WILL CORRESPOND TO THE SCORING PLAN FOR WALL SURFACES SHOWN ON THE PLANS (DWG #7).
7. NO FILL SHALL BE PLACED AGAINST ANY WALL ABOVE EXISTING GRADE FOR 14 DAYS UNLESS APPROVED TEMPORARY BRACING IS PROVIDED.

EXISTING CONDITIONS PLAN - NOT VERIFIED BY OWNER
CONTRACTOR SHALL VERIFY ALL EXISTING CONDITIONS PRIOR TO PROCEEDING WITH THE WORK

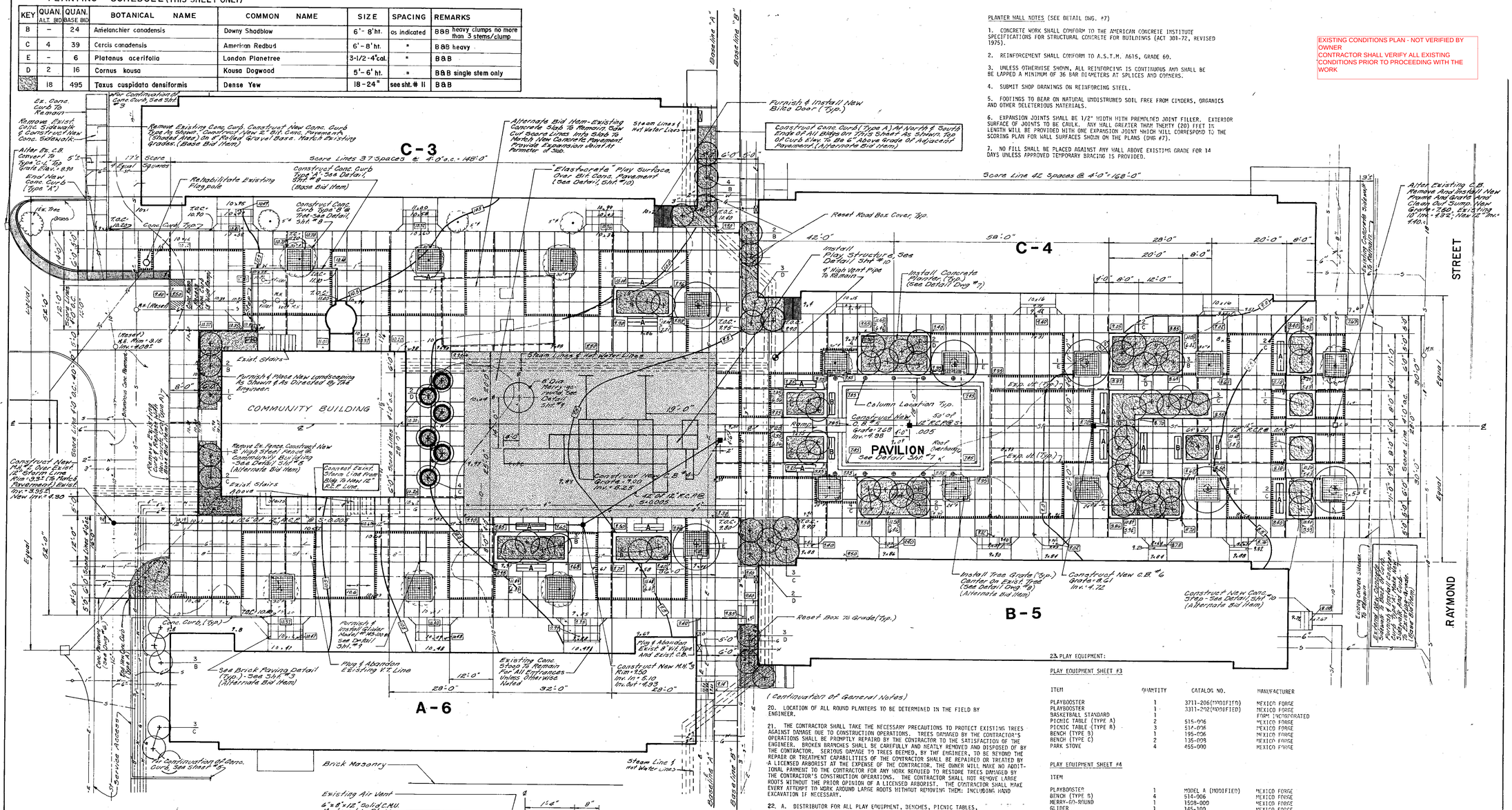
C-3
C-4
A-6
B-5
COMMUNITY BUILDING
PAVILION
STREET
RAYMOND
Score Lines 37 Spaces @ 4'-0" o.c. = 148'-0"
Score Line 42 Spaces @ 4'-0" = 168'-0"
Reset Road Box Cover, Typ.
Install Play Structure & See Detail Sht #10
Install Concrete Plinths (Typ.) (See Detail Dwg #7)
Column Location Typ.
Construct New C.B. #5
Construct New C.B. #6
Construct New Conc. Step - See Detail, Sht #10 (Alternate Bid Item)
Install Tree Grate (Typ.) Center On Exist. Tree (See Detail Dwg. #9) (Alternate Bid Item)
Reset Box To Grade (Typ.)
Exp. Jt. (Typ.)
Exist. Stairs
Furnish & Place New Landscaping As Shown & As Directed By The Engineer.
Remove Ex. Fence Construct New 5' High Steel Fence @ Community Building - See Detail, Sht #8 (Alternate Bid Item)
Connect Exist. Storm Line From Bldg. To New 12" R.C.P. Line.
Construct New C.B. #8
Construct New M.H. #9
Plug & Abandon Exist. C.B. And Exist. Pipe
Plug & Abandon Existing V.C. Line
Existing Conc. Steps To Remain For All Entrances Unless Otherwise Noted
Sea Brick Paving Detail (Typ.) - See Sht #3 (Alternate Bid Item)
Conc. Curb, (Typ.)
Remove Existing Conc. Curb, Construct New Conc. Curb Type As Shown, Construct New 6" Thk. Conc. Pavement As Shown (Shaded Area) On 6" Rolled Gravel Base. Match Existing Grades. (Base Bid Item)
Alternate Bid Item - Existing Concrete Slab To Remain, Saw Cut Score Lines Into Slab To Match New Concrete Pavement. Provide Expansion Joint At Perimeter of Slab.
Furnish & Install New Bike Door (Typ.)
Construct Conc. Curb (Type A) At North & South Ends of All Bldgs on This Sheet As Shown. Top Of Curb Elev. To Be 6" Above Grade Of Adjacent Pavement. (Alternate Bid Item)
Rehabilitate Existing Playpole
Construct Conc. Curb Type A - See Detail, Sht #8 (Base Bid Item)
"Elastocrete" Play Surface, Over Bit. Conc. Pavement (See Detail, Sht #10)
Alter Ex. C.B. Convert To Yard C.I. Top Grate Elev. = 8.94
End New Conc. Curb (Type 'A')
Remove Exist. Conc. Sidewalk & Construct New Conc. Sidewalk
Alter Existing C.B. Remove And Install New Frame And Grate And Clean Out Sump. New Grate = 7.60, Existing 10" Inv. = 4.32, New 12" Inv. = 4.10
Existing Concrete Sidewalk
Existing Conc. Curb
Existing Bituminous Conc. Pavement
Existing Bituminous Conc. Sidewalk
Existing Conc. Curb To Remain
Existing Conc. Steps To Remain
Existing Conc. Curb To Remain
Existing Conc. Curb To Remain
Existing Conc. Curb

EXISTING CONDITIONS PLAN - NOT VERIFIED BY OWNER
CONTRACTOR SHALL VERIFY ALL EXISTING CONDITIONS PRIOR TO PROCEEDING WITH THE WORK

NOTE:
This drawing is for reference only, Refer to current survey plan.

WASHINGTON VILLAGE COMMUNITY CENTER

PHASE 1
DEMOLITION

PERMIT/PRICING — SEPT 15, 2014

NOTE:
Elevations to be taken from Bench Mark "El 6.56" Brass Plug in Blue Stone C.B. Cover at Northeast Corner of Raymond St.

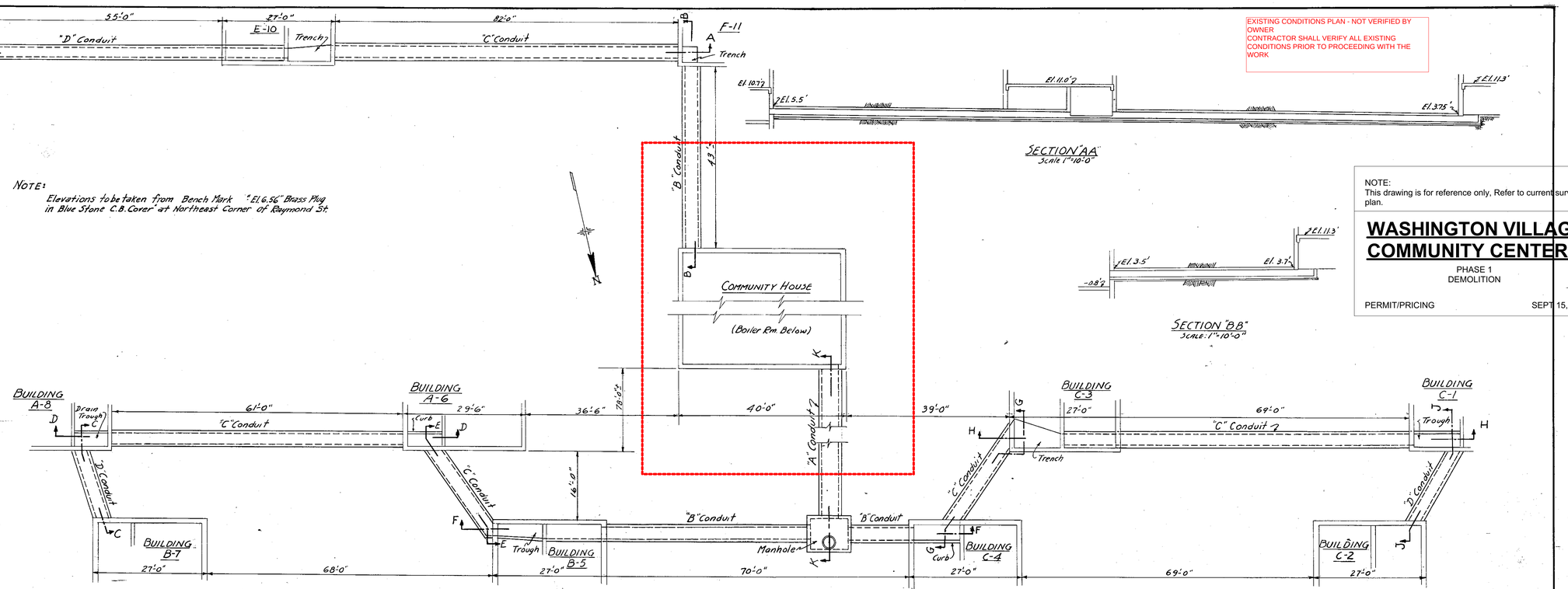

PLAN OF CONDUIT RUNS
Scale: 1"=10'-0"

NOTE: All conduit runs to pitch and drain back to Boiler Room (Basement of Community Building) Exact location of all conduit connections to Buildings to be determined in field.

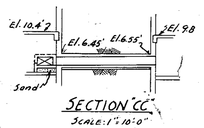

SECTION "CC"
Scale: 1"=10'-0"

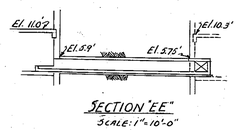

SECTION "EE"
Scale: 1"=10'-0"

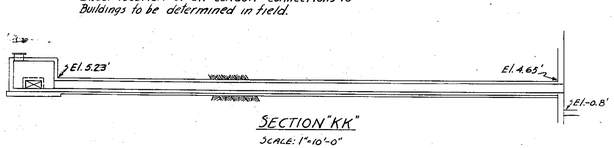

SECTION "KK"
Scale: 1"=10'-0"

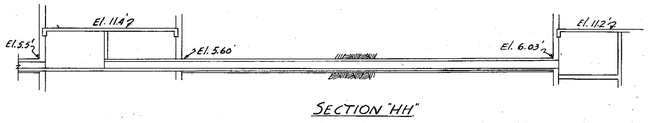

SECTION "HH"
Scale: 1"=10'-0"

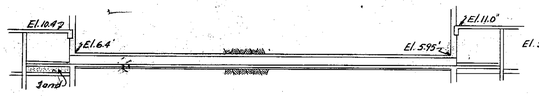

SECTION "DD"
Scale: 1"=10'-0"

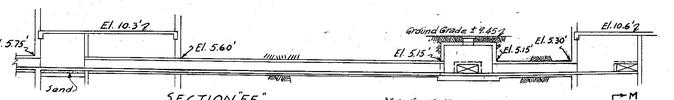

SECTION "FF"
Scale: 1"=10'-0"

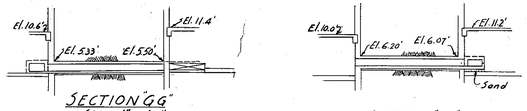

SECTION "GG"
Scale: 1"=10'-0"

SECTION "JJ"
Scale: 1"=10'-0"

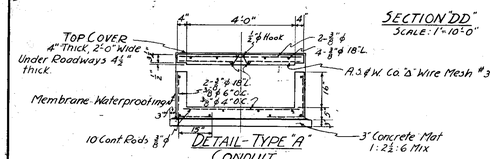

DETAIL-TYPE "A" CONDUIT

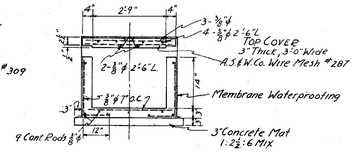

DETAIL-TYPE "C" CONDUIT
Scale: ½"=1'-0"

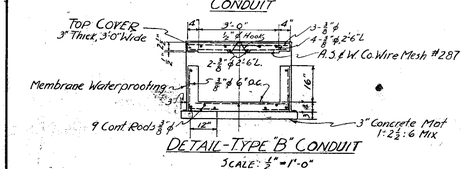

DETAIL-TYPE "B" CONDUIT
Scale: ½"=1'-0"

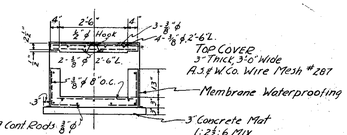

DETAIL-TYPE "D" CONDUIT
Scale: ½"=1'-0"

NOTE:
Joints between Covers and Sides to be made with Covers bedded in heavy Asbestos Pooling Cement. Abutting Joints in Top Covers to be sealed with heavy Asbestos Pooling Cement used as a mortar.
All concrete 1:2:4 mix except as noted.

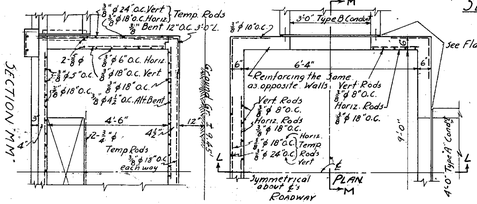

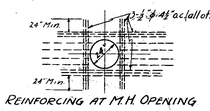

REINFORCING AT M.H. OPENING

DETAILS FOR MANHOLE
Scale: ½"=1'-0"

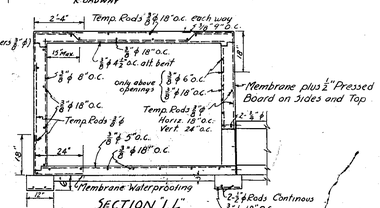

SECTION "LL"

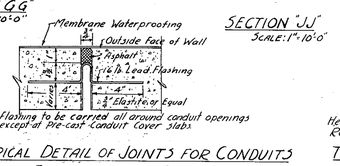

TYPICAL DETAIL OF JOINTS FOR CONDUITS AT BUILDINGS AND MANHOLES
Scale: 3"=1'-0"

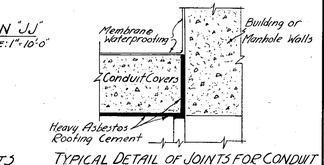

TYPICAL DETAIL OF JOINTS FOR CONDUIT COVERS AT BUILDINGS & MANHOLES
Scale: 3"=1'-0"

WASHINGTON VILLAGE HOUSING PROJECT
FOR
THE HOUSING AUTHORITY
CITY OF NORWALK, CONN.
UNDER LOAN CONTRACT WITH THE UNITED STATES HOUSING AUTHORITY

PROJECT ENGR.			
ISSUED	FRANK, MARTIN & SKILL	DRAWING NO.	H
REVISED	96 WASHINGTON ST. S. NORWALK, CONN.		
	WM. F. PEDERSON — ASSOC. ARCH'T.		
	HERAULT, J. D. HILES — ASST. ARCH'T.	JOB NO.	317
	APPROVED		
	HOUSING AUTHORITY		As Noted

TITLE: UNDERGROUND CONDUIT ARRANGEMENT, PLAN & DETAILS
WEST CUTLAND MAPES — MECHANICAL ENGINEERS
JOSEPH WHITNEY, LANDSCAPE ARCH. — ELWYN SEELYE CO. ENGINEERS

EXISTING CONDITIONS PLAN - NOT VERIFIED BY OWNER
CONTRACTOR SHALL VERIFY ALL EXISTING CONDITIONS PRIOR TO PROCEEDING WITH THE WORK

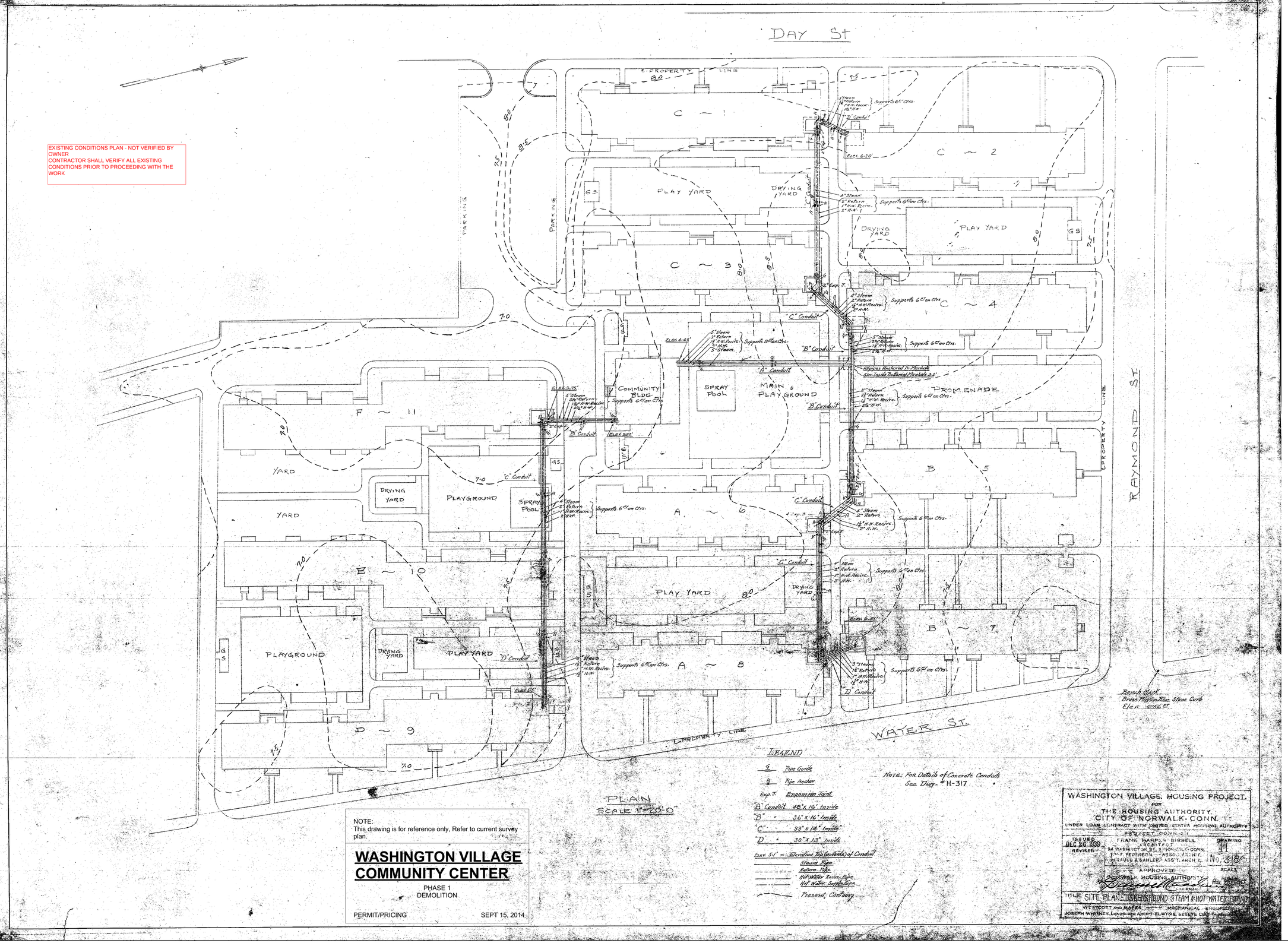

NOTE:
This drawing is for reference only, Refer to current survey plan.

WASHINGTON VILLAGE COMMUNITY CENTER

PHASE 1
DEMOLITION

PERMIT/PRICING SEPT 15, 2014

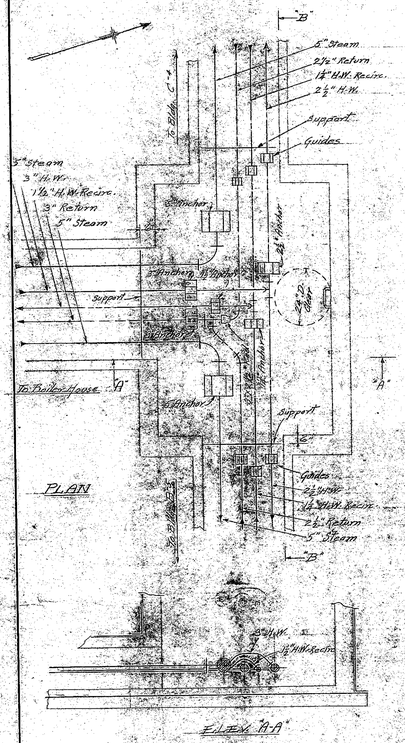

Arrangement of Steam & Hot Water Piping in Manhole

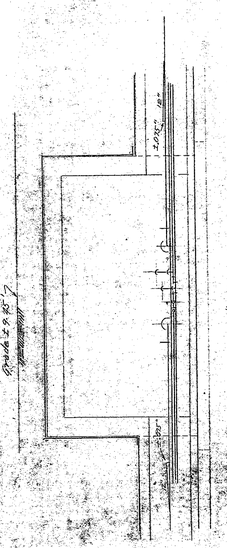

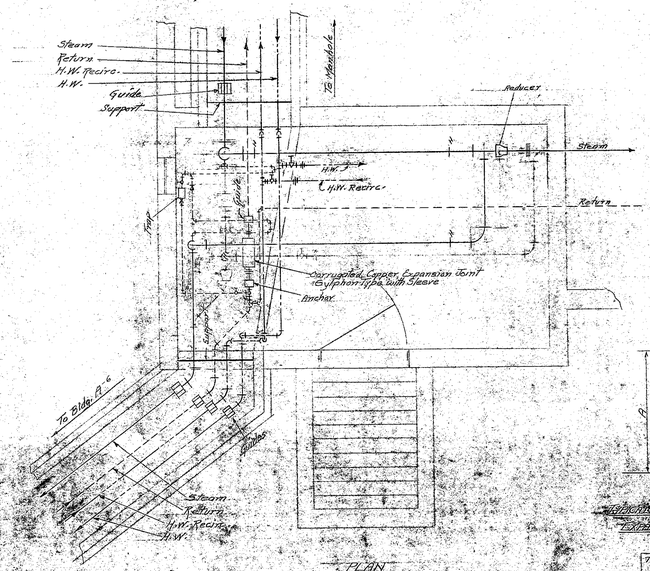

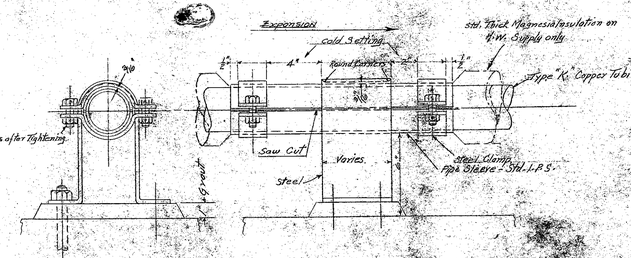

Typical Hot Water Supply & Recirculating Pipe Guides

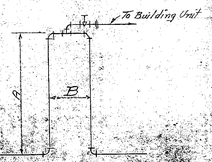

Typical Piping in Apartment Buildings Showing Expansion Loops in Utility Rooms

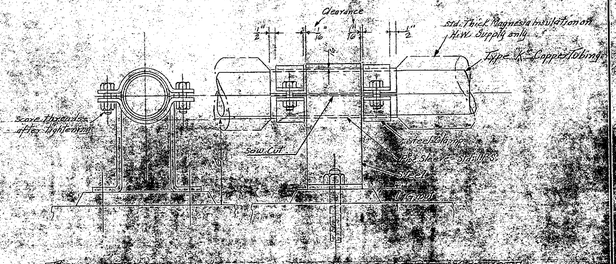

Typical Hot Water Supply & Recirculating Pipe Guides at Typical Stairs

Pipe Nominal Size	A	B
1"	48"	24"
1¼"	62"	31"
1½"	56"	28"
2"	50"	25"
2½"	44"	22"
3"	42"	21"

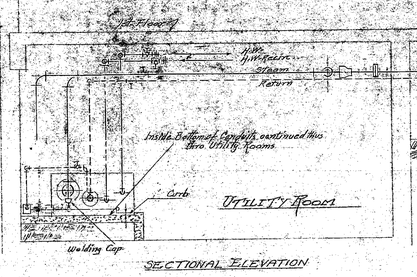

Sectional Elevation

Typical Piping in Utility Rooms

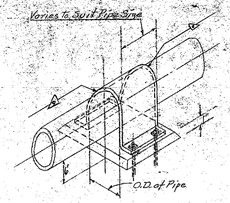

Typical Steam & Return Pipe Anchors

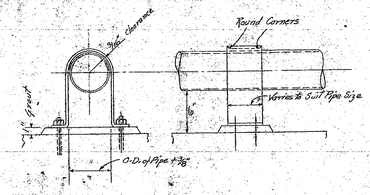

Typical Return Pipe Guides

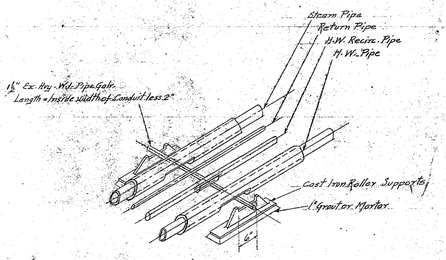

Typical Pipe Supports

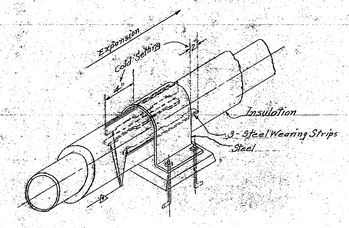

Typical Steam Pipe Guides

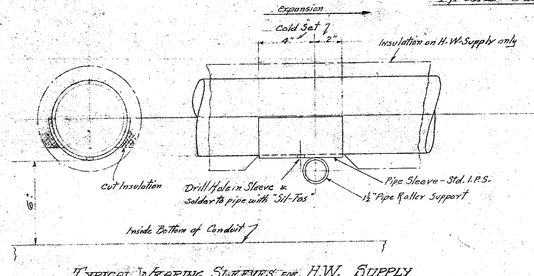

Typical Wearing Sleeves for H.W. Supply & Recirculating Pipes at Roller Supports

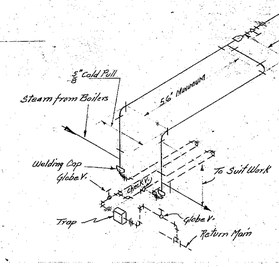

Typical Steam Pipe Expansion Bends & Drips in Utility Rooms

Legend

- Steam Pipe
- Return Pipe
- H.W. Supply Pipe
- H.W. Recirculating Pipe
- Gate Valve
- Globe Valve
- Field Fillet Weld
- Pipe Hanger

EXISTING CONDITIONS PLAN - NOT VERIFIED BY OWNER
CONTRACTOR SHALL VERIFY ALL EXISTING CONDITIONS PRIOR TO PROCEEDING WITH THE WORK

Note: For Plot Plan-Underground Steam & Hot Water Piping See Dwg. # H-318

NOTE:
This drawing is for reference only, Refer to current survey plan.

WASHINGTON VILLAGE COMMUNITY CENTER

PHASE 1
DEMOLITION

PERMIT/PRICING — SEPT 15, 2014

WASHINGTON VILLAGE HOUSING PROJECT
FOR
THE HOUSING AUTHORITY
CITY OF NORWALK-CONN.
UNDER LOAN CONTRACT WITH UNITED STATES HOUSING AUTHORITY
PROJECT CONN. 1

ISSUED
REVISED

FRANK HARPER BISSELL
ARCHITECT
96 WASHINGTON AT. S. NORWALK-CONN
G. F. PEDERSON — ASSOC. ARCHT.
JERAULD J. OEHLER — ASS'T. ARCHT.

DRAWING H
No. 319

APPROVED
NORWALK HOUSING AUTHORITY
Samuel Kaufman
SCALE None

TITLE: DETAILS OF UNDERGROUND STEAM & HOT WATER PIPING

WESTCOTT AND MAPES — MECHANICAL ENGINEERS
JOSEPH WHITNEY, LANDSCAPE ARCHT. — REVELL MFG. CO. STRUCTURAL

EXISTING CONDITIONS PLAN - NOT VERIFIED BY OWNER
CONTRACTOR SHALL VERIFY ALL EXISTING CONDITIONS PRIOR TO PROCEEDING WITH THE WORK

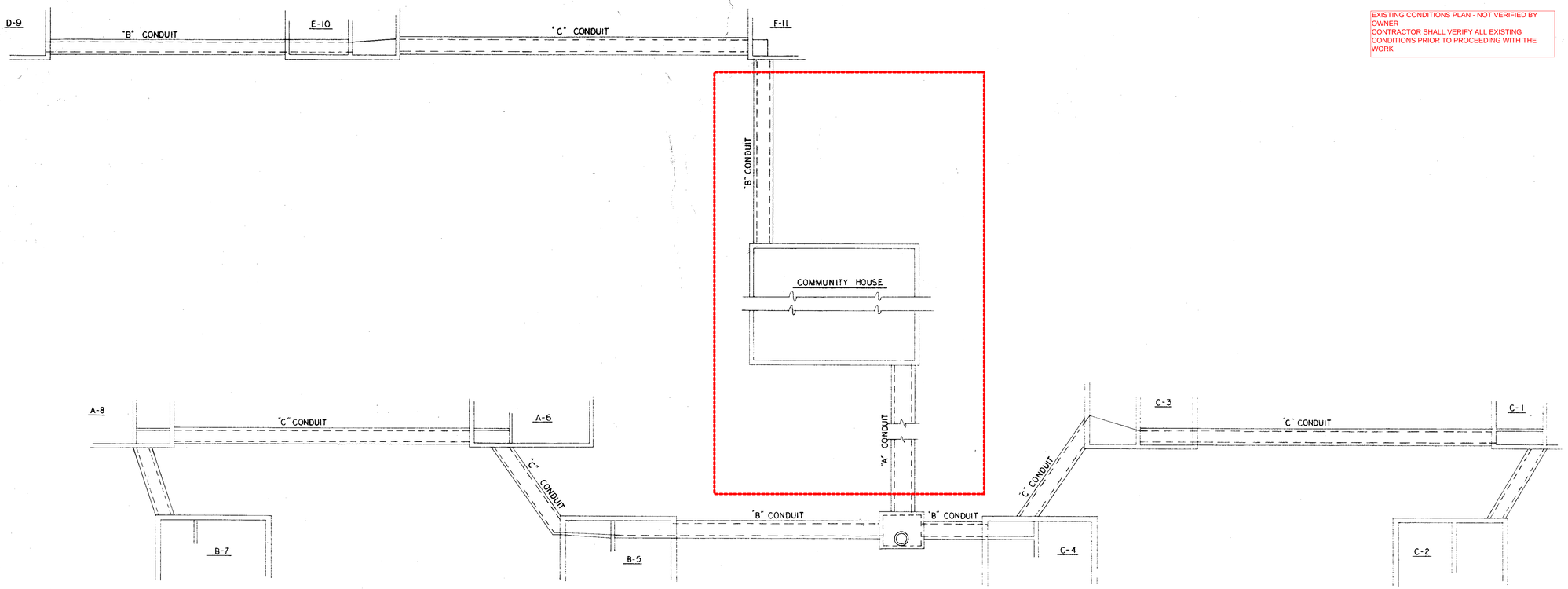

PLAN OF EXISTING CONDUIT RUNS
NO SCALE

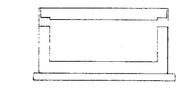

DETAIL - TYPE "A" CONDUIT

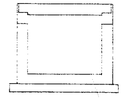

DETAIL - TYPE "C" CONDUIT

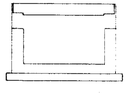

DETAIL - TYPE "B" CONDUIT

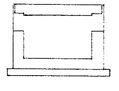

DETAIL - TYPE "D" CONDUIT

NOTE:
This drawing is for reference only, Refer to current survey plan.

WASHINGTON VILLAGE COMMUNITY CENTER

PHASE 1
DEMOLITION

PERMIT/PRICING SEPT. 15, 2014

WASHINGTON VILLAGE
WATER STREET
NORWALK, CONNECTICUT

Hugh J Sweeney PE
69 East Avenue, Norwalk, CT

UNDERGROUND CONDUIT ARRNT. PLAN & DETAILS

DWN: WLA DATE: 5-12-70
CHK: HJS SCALE: NONE

P2

NOTE
DOTTED LINES INDICATE HINGED SECTIONS.

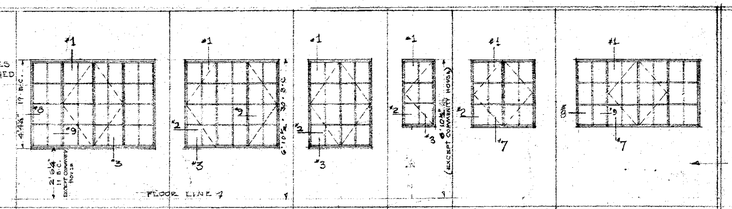

HEIGHT OF B & C WINDOWS SHOWN ON 1/8" SCALE ELEVATIONS OF COMMUNITY HOUSE

SEE BELOW ON THIS SHEET FOR 3/4" SCALE DETAILS OF TYPE 'D' WINDOWS

MARK	E	F	G	H	C	B
WIDTH MASONRY OPENING	6' 2"	4' 8"	3' 2"	1' 8"	3' 2"	6' 2"
HEIGHT MASONRY OPENING	4' 4¼"	4' 4¼"	4' 4¼"	3' 4"	3' 4"	3' 4"
METAL JAMBS AND TRIM	YES	YES	YES	YES	NO	NO
GLASS	SEE SPECIFICATIONS					
SCREENS VENT. OPENINGS ONLY	YES	YES	YES	YES	NO SCREENS	NO SCREENS
SHADE ROLLER HARDWARE	YES	YES	YES	YES	NO	NO
DRAPERY ROD HARDWARE	YES	YES	YES	YES	NO	NO
SLATE OR ALUMINUM SILLS	YES	YES	YES	YES	NO	NO
LINTELS	SEE STRUCTURAL DRAWINGS					

3/8" = 1'-0" SCALE
EXTERIOR ELEVATION OF WINDOWS AND
WINDOW SCHEDULE
CASEMENT TYPE WINDOWS

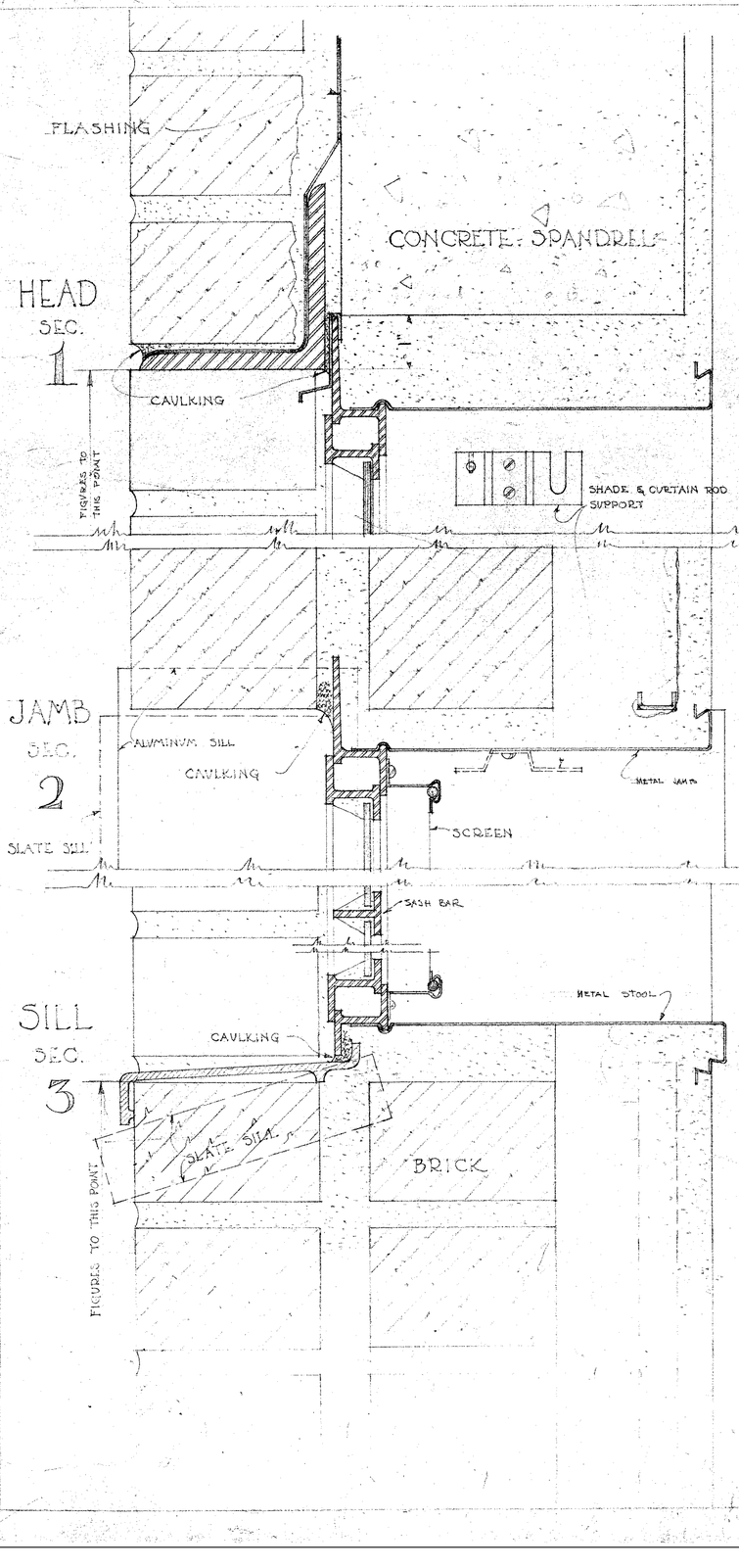

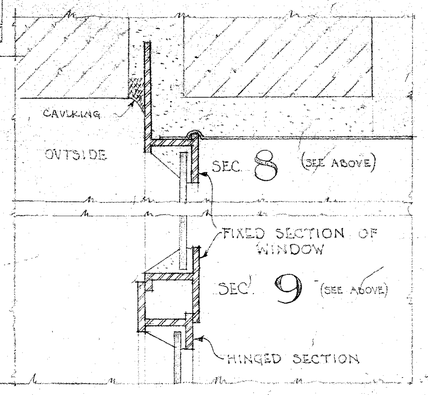

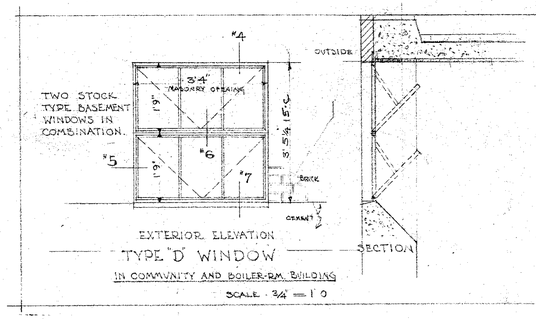

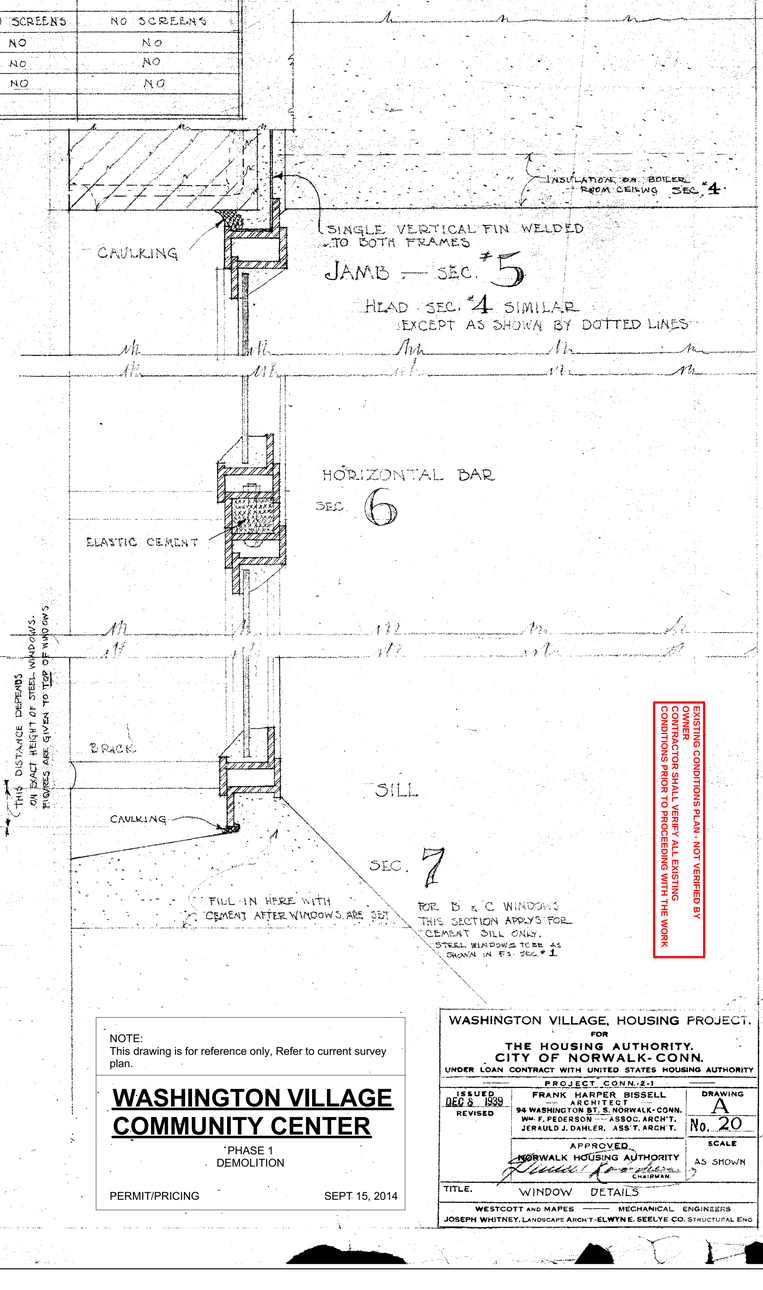

EXISTING CONDITIONS PLAN - NOT VERIFIED BY OWNER
CONTRACTOR SHALL VERIFY ALL EXISTING CONDITIONS PRIOR TO PROCEEDING WITH THE WORK

NOTE:
This drawing is for reference only, Refer to current survey plan.

WASHINGTON VILLAGE COMMUNITY CENTER

PHASE 1
DEMOLITION

PERMIT/PRICING — SEPT 15, 2014

WASHINGTON VILLAGE, HOUSING PROJECT.
FOR
THE HOUSING AUTHORITY.
CITY OF NORWALK-CONN.
UNDER LOAN CONTRACT WITH UNITED STATES HOUSING AUTHORITY
PROJECT CONN.-2-1

ISSUED DEC 5 1939
REVISED

FRANK HARPER BISSELL
ARCHITECT
94 WASHINGTON ST. S. NORWALK-CONN.
WM. F. PEDERSON — ASSOC. ARCH'T.
JERAULD J. DAHLER, ASS'T. ARCH'T.

DRAWING A No. 20

APPROVED
NORWALK HOUSING AUTHORITY
CHAIRMAN

SCALE AS SHOWN

TITLE. WINDOW DETAILS

WESTCOTT AND MAPES — MECHANICAL ENGINEERS
JOSEPH WHITNEY, LANDSCAPE ARCH'T. ELWYN E. SEELYE CO. STRUCTURAL ENG.

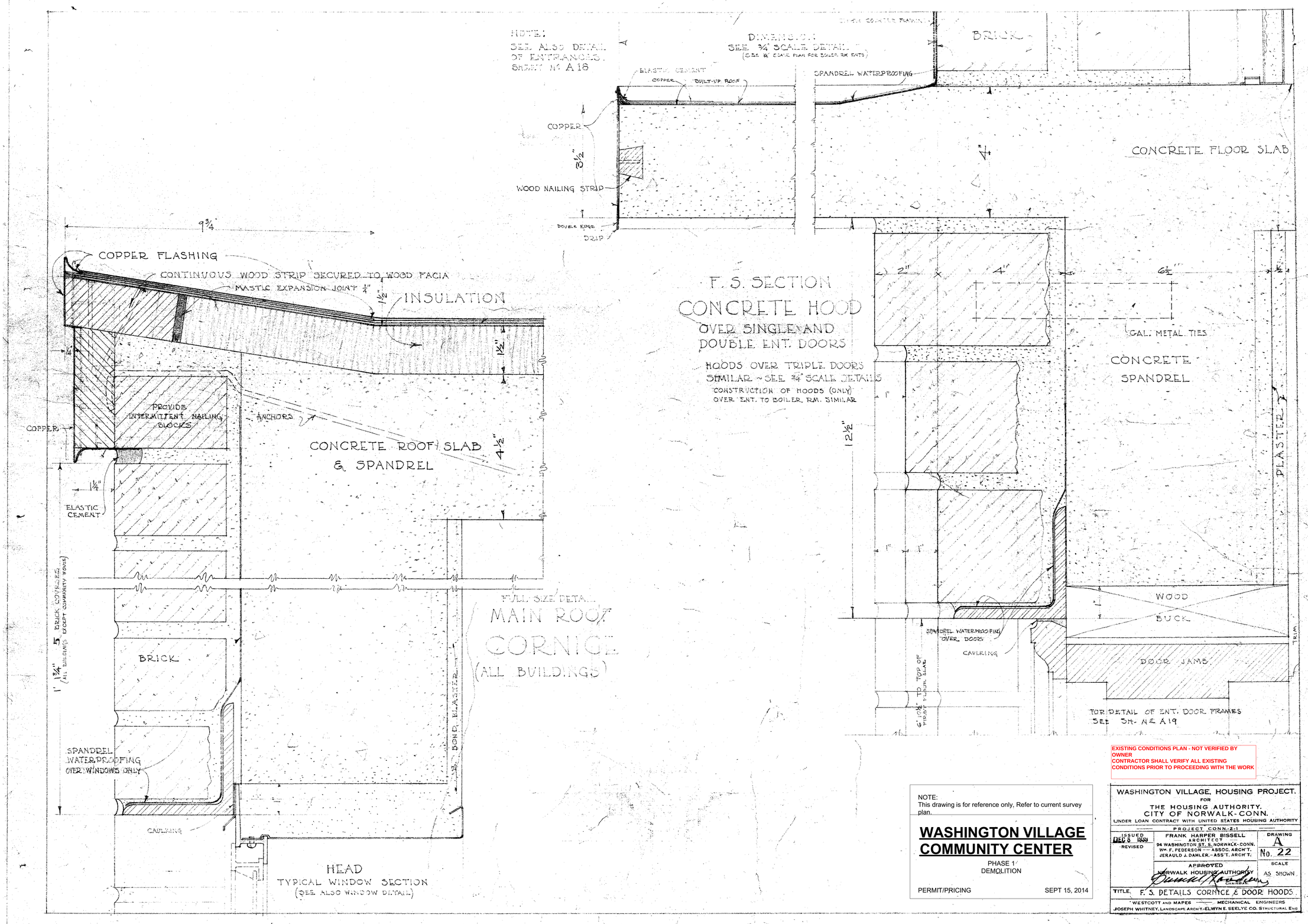

EXISTING CONDITIONS PLAN - NOT VERIFIED BY OWNER
CONTRACTOR SHALL VERIFY ALL EXISTING CONDITIONS PRIOR TO PROCEEDING WITH THE WORK

NOTE:
This drawing is for reference only, Refer to current survey plan.

WASHINGTON VILLAGE COMMUNITY CENTER

PHASE 1
DEMOLITION

PERMIT/PRICING SEPT 15, 2014

WASHINGTON VILLAGE, HOUSING PROJECT.
FOR
THE HOUSING AUTHORITY.
CITY OF NORWALK-CONN.
UNDER LOAN CONTRACT WITH UNITED STATES HOUSING AUTHORITY
PROJECT CONN.-2-1

ISSUED DEC 8 1939 REVISED	FRANK HARPER BISSELL ARCHITECT 94 WASHINGTON ST. S. NORWALK-CONN. Wm. F. PEDERSON — ASSOC. ARCH'T. JERAULD J. DAHLER.—ASS'T. ARCH'T.	DRAWING A No. 22
	APPROVED NORWALK HOUSING AUTHORITY CHAIRMAN	SCALE AS SHOWN

TITLE F. S. DETAILS CORNICE & DOOR HOODS

WESTCOTT AND MAPES — MECHANICAL ENGINEERS
JOSEPH WHITNEY, LANDSCAPE ARCH'T.-ELWYN E. SEELYE CO. STRUCTURAL ENG

EXISTING CONDITIONS PLAN - NOT VERIFIED BY OWNER
CONTRACTOR SHALL VERIFY ALL EXISTING CONDITIONS PRIOR TO PROCEEDING WITH THE WORK

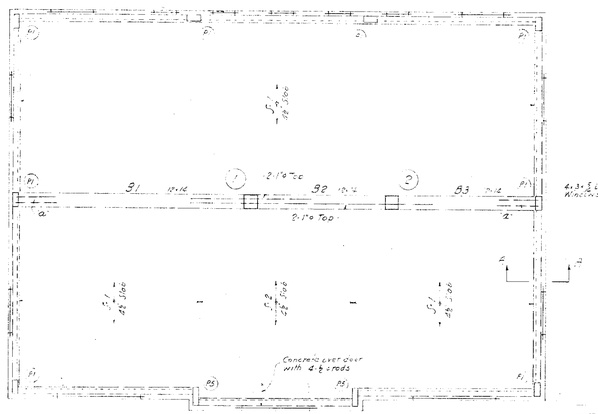

ROOF FRAMING PLAN
Scale ¼"=1'-0"

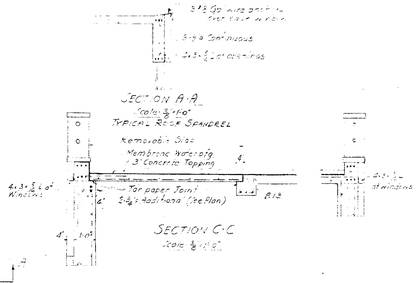

SECTION A-A
Scale ¾"=1'-0"
TYPICAL ROOF SPANDREL
Remove - Slab
Membrane Waterproofing
1-3 Concrete Topping

SECTION C-C
Scale ¾"=1'-0"

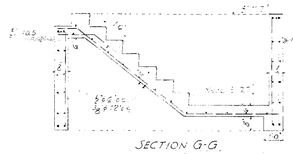

SECTION G-G
Scale ¾"=1'-0"

MEZZANINE FRAMING PLAN
Scale ¼"=1'-0"

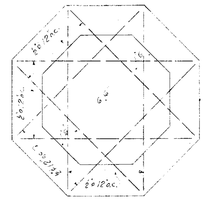

SECTION THRU STACK FOUNDATION
Scale ¼"=1'-0"

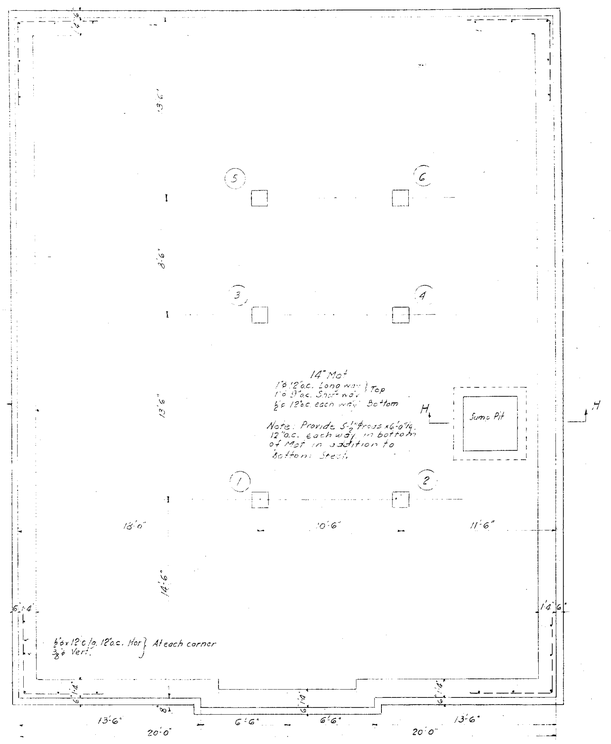

FOUNDATION PLAN
Scale ¼"=1'-0"

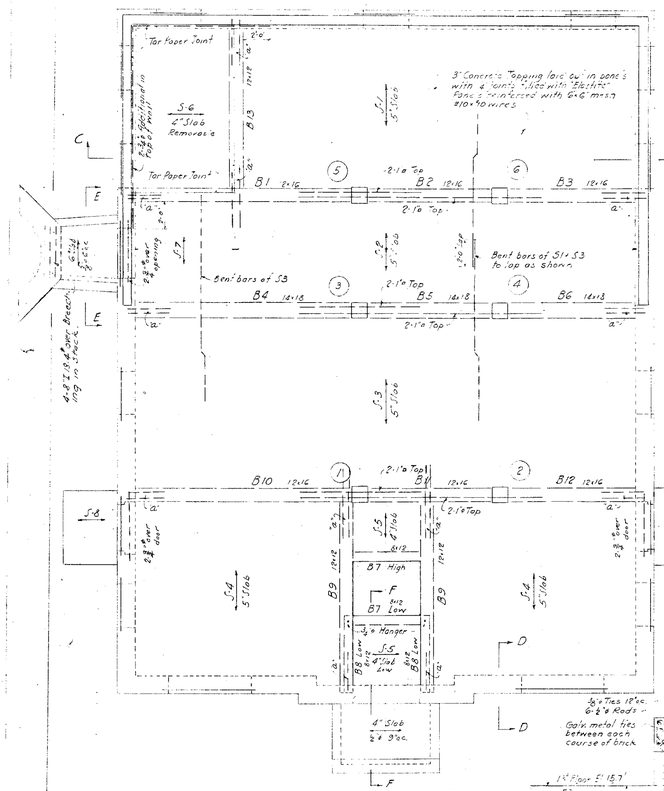

FIRST FLOOR FRAMING PLAN
Scale ¼"=1'-0"

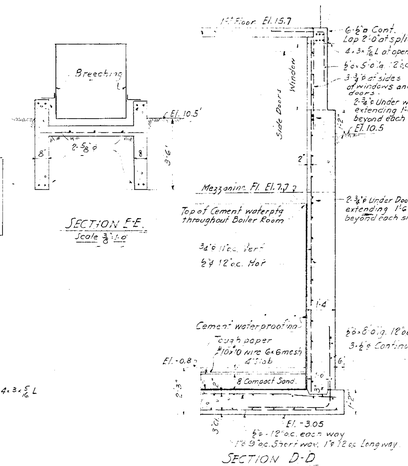

SECTION D-D
Scale ¾"=1'-0"
TYPICAL EXTERIOR BOILER ROOM WALL

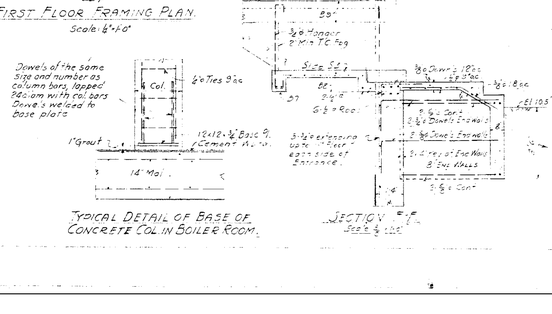

TYPICAL DETAIL OF BASE OF CONCRETE COL. IN BOILER ROOM.

SECTION E-E
Scale ¾"=1'-0"

SECTION F-F
Scale ¾"=1'-0"

SECTION H-H
Scale ¾"=1'-0"

BEAM - SCHEDULE

FLOOR	MARK	NO	SIZE	REINFORCEMENT BOTTOM STRT BARS NO	SIZE	LENGTH	STIRRUPS SIZE	TOTAL NO	SPACING FROM EACH END OF SUPPORT	MARK	LENGTH
ROOF	B1		12-14	2	1"ø & Cpl.		⅜ø		1@2, 2@3, 2@6, 3@7, 29" from Col. 1@3, 2@6, 3@8 from wall.		
				2	1"ø & Cpl. 1						
	B2		12-14	3	⅝ø		⅜ø		1@3, 39"		
	B3		12-14	2	⅝ø		⅜ø		1@d, 3@8"		
				1	⅝ø						
FIRST FLOOR	S1		12-16	1	1"ø		½ø		1@3, 4@4, 4@6, 5@9" from Col. 1@3, 5@9" from wall.		
				3	1"ø & Cpl. 5						
	B2		12-16	3	⅝ø		½ø		1@3", 2@7, 2@9		
	B3		12-16	1	⅝ø		½ø		1@3", 3@8		
				2	⅝ø						
	B4		14-18	3	1"ø		½ø		1@3, 3@4, 3@6, 3@9, 3@12" from Col. 1@3, 2@7, 2@9, 1@12" from wall.		
	B5		14-18	2	1"ø & Cpl. 3		½ø		1@3, 2@5, 2@7, 1@10" from Col. 3. 1@3, 1@9" from Col. 4.		
	B6		14-18	3	⅝ø		⅜ø		1@3, 2@6, 2@9" from Col. 1@3, 1@9" from wall.		
	B7		8-12	2	⅝ø		½ø				
	B8		8-12	2	⅝ø						
	B9		12-12	3	⅞ø		½ø		1@3", 39"		
	B10		12-16	1	1"ø		½ø		1@3, 3@4, 3@6, 3@9, 3@12" from Col. 1@3, 2@6, 2@9, 1@11" from wall.		
				3	1"ø & Cpl. 1						
	B11		12-16	3	⅝ø		⅜ø		1@3, 3@5, 2@8 from Col. 1 1@3, 10@ from Col. 2		
	B12		12-16	2	⅞ø		½ø		1@3", 2@6", 2@9"		
				2	¾ø						
	B13		12-18	2	¾ø		½ø		1@3, 3@8"		
				1	⅝ø						
MEZZ	B1		12-14	3	¾ø		⅜ø		1@3 - 2@8		
	B2		12-14	3	⅝ø		⅜ø		1@3, 2@8		
	B3		12-14	2	⅞ø		½ø		1@3" 2@9" from Col. 1@3" 2@9" from wall		
				1	⅝ø						

SLAB - SCHEDULE

FLOOR	MARK	DEPTH	NO	MAIN REINFORCEMENT STRAIGHT BARS SIZE	SPACING	NO	LENGTH	BENT BARS SIZE	SPACING	MARK	NO	A	B	C	D	H	LENGTH	TEMPERATURE STEEL SIZE	SPACING	NO	LENGTH
ROOF	S1	4½"		⅝ø	18"oc.			⅝ø	18"oc.												
	S2	4½"		⅝ø	18"oc.			⅝ø	18"oc.												
FIRST FLOOR	S1	5"		⅝ø	11"oc.			⅝ø	11"oc.												
	S2	5"		⅝ø	11"oc.			⅝ø	11"oc.												
	S3	5"		⅜ø	13"oc.			⅜ø	13"oc.												
	S4	5"		⅝ø	13"oc.			⅝ø	13"oc.												
	S5	4"		⅜ø	16"oc.			⅜ø	16"oc.												
	S6	4"		½ø	8"oc.			-	-												
	S7	5"		⅜ø	11"oc.			½ø	11"oc.												
	S8	4½		⅝ø	9"oc. Top		10'-0"														
MEZZ	S1	5½"		⅝ø	12"oc.			⅝ø	12"oc.												

Note: For General Notes and additional Typical Details See Dwgs S-101, S-102, S-103

NOTE:
This drawing is for reference only, Refer to current survey plan.

WASHINGTON VILLAGE COMMUNITY CENTER

PHASE 1
DEMOLITION

PERMIT/PRICING — SEPT 15, 2014

COLUMN - SCHEDULE

TIER	COL. NO.	1	2	3	4	5	6
Top of Roof Line		35	22				
		12-12	12-12				
		4 ⅝ø	4 ⅝ø				
1st Fl.							
		62	51	61	52	43	33
		14-14	14-14				
		4 ⅝ø	4 ⅝ø				
Mezz.							
El. 7.7		56	46				
		12-14	12-14	12-14			
		4 ⅝ø	4 ⅝ø	4 ⅝ø			
Top of Boiler Room Mat							

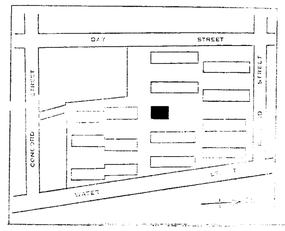

WASHINGTON VILLAGE, HOUSING PROJECT
FOR
THE HOUSING AUTHORITY, CITY OF NORWALK-CONN.
UNDER LOAN CONTRACT WITH UNITED STATES HOUSING AUTHORITY
PROJECT CONN 2-1

ISSUED
REVISED

FRANK HARPER BISSELL — ARCHITECT
94 WASHINGTON ST., S. NORWALK-CONN.
WM F. FREDERSON — ASSOC. ARCHT.
JERAULD J. CAHLER — ASST. ARCHT.

DRAWING S
No 107

APPROVED
NORWALK HOUSING AUTHORITY
CHAIRMAN

SCALE AS SHOWN

TITLE: COMMUNITY HOUSE AND BOILER ROOM

WESTCOTT AND MAPES — MECHANICAL ENGINEERS
JOSEPH WHITNEY, LANDSCAPE ARCHT. - ELWYN E. SEELYE CO. STRUCTURAL ENGINEERS

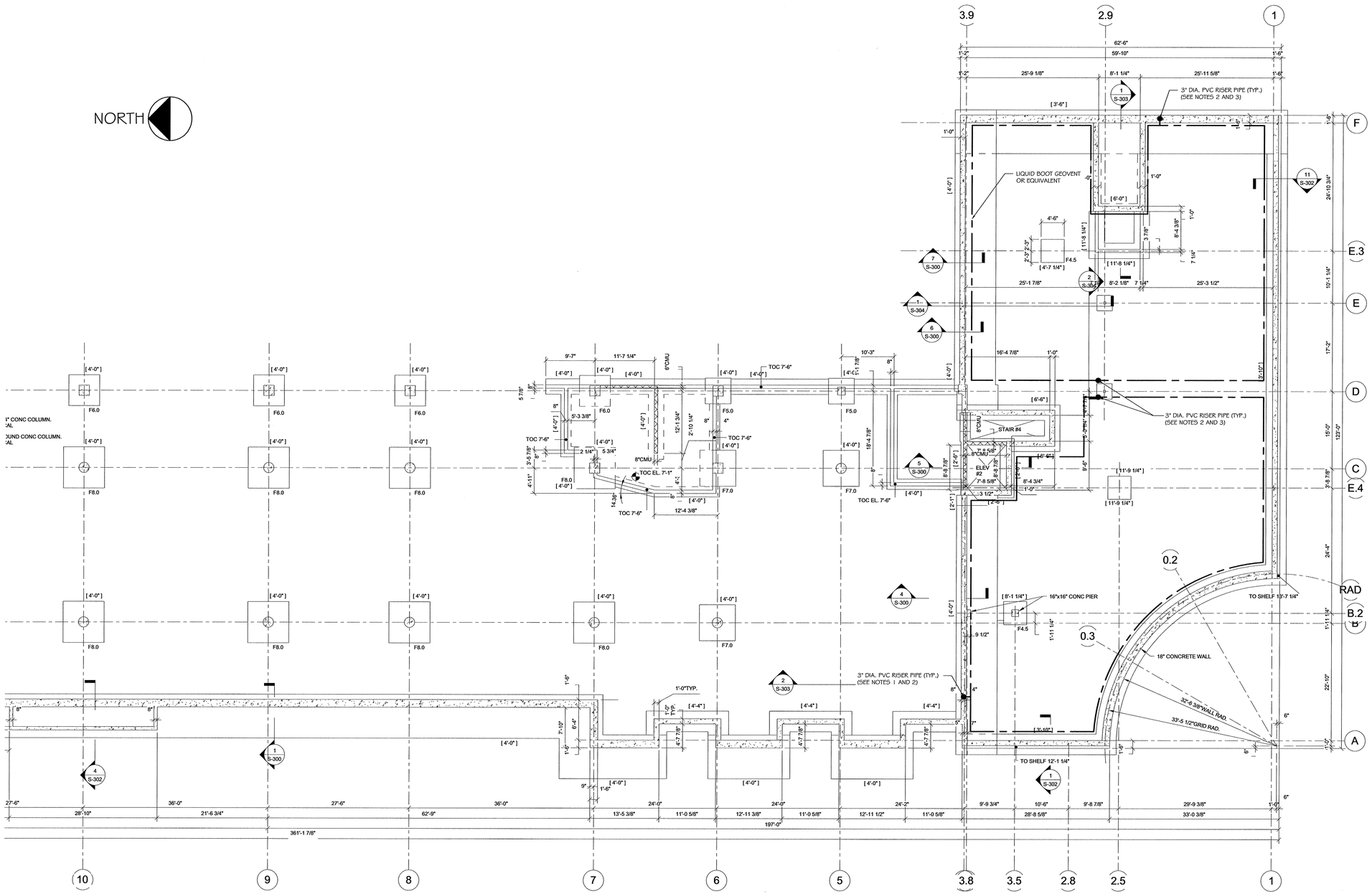

NOTES:

1. EXACT LOCATIONS OF 3-INCH DIA. RISER PIPES SHOULD BE COORDINATED WITH MEP ENGINEER / ARCHITECT.
2. SEAL ALL PENETRATIONS THROUGH SLAB AND SLAB/WALL JOINTS USING A POLYURETHANE OR AN ELASTOMETRIC JOINT SEALANT.
3. REFER TO PASSIVE SUB SLAB VENTILATION DETAIL DRAWING G2.0.
4. REFER TO THE PASSIVE SUB SLAB VENTILATION SYSTEM DETAIL SHOWN ON DRAWING GT1.0 FOR INSTALLATION DETAILS.

GENERAL NOTE:

THE EXCAVATION, HANDLING, AND MANAGEMENT OF ALL SITE SOILS, INCLUDING THE ON-SITE REUSE OF EXISTING SITE SOILS TO THE FULLEST EXTENT FEASIBLE, SHALL BE PERFORMED IN ACCORDANCE WITH THE EARTHWORK SPECIFICATION SECTION 02300 AND THE SOIL MANAGEMENT PLAN PREPARED FOR USE ON THIS PROJECT, PURSUANT TO THE STATE OF CONNECTICUT REMEDIATION STANDARD REGULATIONS (RSRS). LAWN/LANDSCAPED AREAS OF THE SITE NOT COVERED BY THE PROPOSED BUILDINGS, CONCRETE OR PAVEMENT SHALL BE COVERED BY A GEOTEXTILE MARKER BARRIER AND A MINIMUM 4-FOOT SURFICIAL THICKNESS OF "CLEAN" SOIL, MEETING THE CT RSRS, AT FINISHED GRADE.

GRAPHIC SCALE

10 0 10 20 40

Washington Village Phase 1

20 Day Street Building B

Norwalk, CT

Trinity Washington Village Limited Partnership
&
the Norwalk Housing Authority

E-ICON ARCHITECTURE
101 SUMMER ST BOSTON MA 02110
617-451-3333 www.iconarch.com

CONSULTANT

McPHAIL ASSOCIATES, LLC
Geotechnical and Geoenvironmental Engineers
2269 Massachusetts Avenue
Cambridge, MA 02140
617/868-1420
617/868-1423 (Fax)

STAMP

MARK	DATE	DESCRIPTION
	09-15-2014	PERMIT/ PRICING
	06-13-2014	PRICING
	11-18-2013	40% CHFA
	09-19-2013	CAM/ SPECIAL PERMIT

PROJECT NO.:
DRAWN BY:
CHECKED BY:

SHEET TITLE

PASSIVE SUB SLAB VENTILATION SYSTEM BUILDING B

GT1.1

9/9/2014 1:29 PM

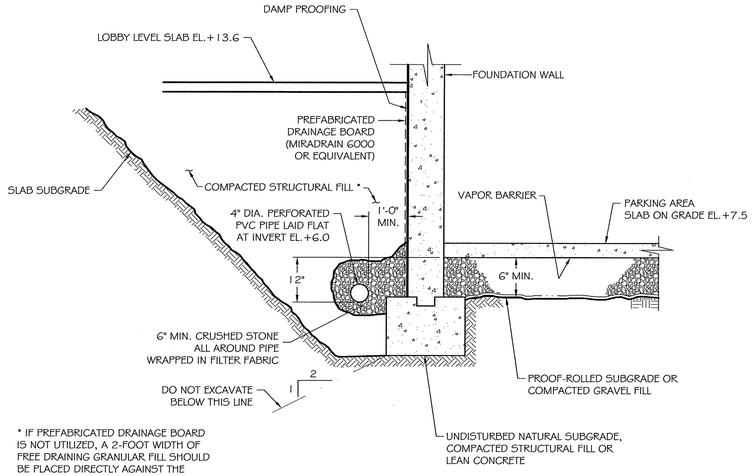

* IF PREFABRICATED DRAINAGE BOARD IS NOT UTILIZED, A 2-FOOT WIDTH OF FREE DRAINING GRANULAR FILL SHOULD BE PLACED DIRECTLY AGAINST THE FOUNDATION WALL

FOUNDATION DRAINAGE DETAIL

N.T.S.

NOTES:

1. EXACT LOCATIONS OF 3-INCH DIA. RISER PIPES SHOULD BE COORDINATED WITH MEP ENGINEER / ARCHITECT.
2. SEAL ALL PENETRATIONS THROUGH SLAB AND SLABWALL JOINTS USING A POLYURETHANE OR AN ELASTOMETRIC JOINT SEALANT.
3. REFER TO PASSIVE SUB SLAB VENTILATION DETAIL DRAWING G2.0.
4. REFER TO THE PASSIVE SUB SLAB VENTILATION SYSTEM DETAIL SHOWN ON DRAWING GT1.0 FOR INSTALLATION DETAILS.

GENERAL NOTE:

THE EXCAVATION, HANDLING, AND MANAGEMENT OF ALL SITE SOILS, INCLUDING THE ON-SITE REUSE OF EXISTING SITE SOILS TO THE FULLEST EXTENT FEASIBLE, SHALL BE PERFORMED IN ACCORDANCE WITH THE EARTHWORK SPECIFICATION SECTION 02300 AND THE SOIL MANAGEMENT PLAN PREPARED FOR USE ON THIS PROJECT, PURSUANT TO THE STATE OF CONNECTICUT REMEDIATION STANDARD REGULATIONS (RSRS). LAWN/LANDSCAPED AREAS OF THE SITE NOT COVERED BY THE PROPOSED BUILDINGS, CONCRETE OR PAVEMENT SHALL BE COVERED BY A GEOTEXTILE MARKER BARRIER AND A MINIMUM 4-FOOT SURFICIAL THICKNESS OF "CLEAN" SOIL, MEETING THE CT RSRS, AT FINISHED GRADE.

GRAPHIC SCALE

10 0 10 20 40

Washington Village Phase 1

20 Day Street Building B

Norwalk, CT

Trinity Washington Village Limited Partnership
&
the Norwalk Housing Authority

E-ICON ARCHITECTURE
101 SUMMER ST BOSTON MA 02110
617-451-3333 www.iconarch.com

CONSULTANT
McPHAIL ASSOCIATES, LLC
Geotechnical and Geoenvironmental Engineers
2269 Massachusetts Avenue
Cambridge, MA 02140
617/868-1420
617/868-1423 (Fax)

STAMP



MARK	DATE	DESCRIPTION
	09-15-2014	PERMIT/ PRICING
	06-13-2014	PRICING
	11-18-2013	40% CHFA
	09-19-2013	CAM/ SPECIAL PERMIT

PROJECT NO.:
DRAWN BY:
CHECKED BY:

SHEET TITLE

FOUNDATION DRAINAGE SYSTEM LAYOUT AND DETAIL BUILDING B

GT2.0

9/9/2014 1:29 PM

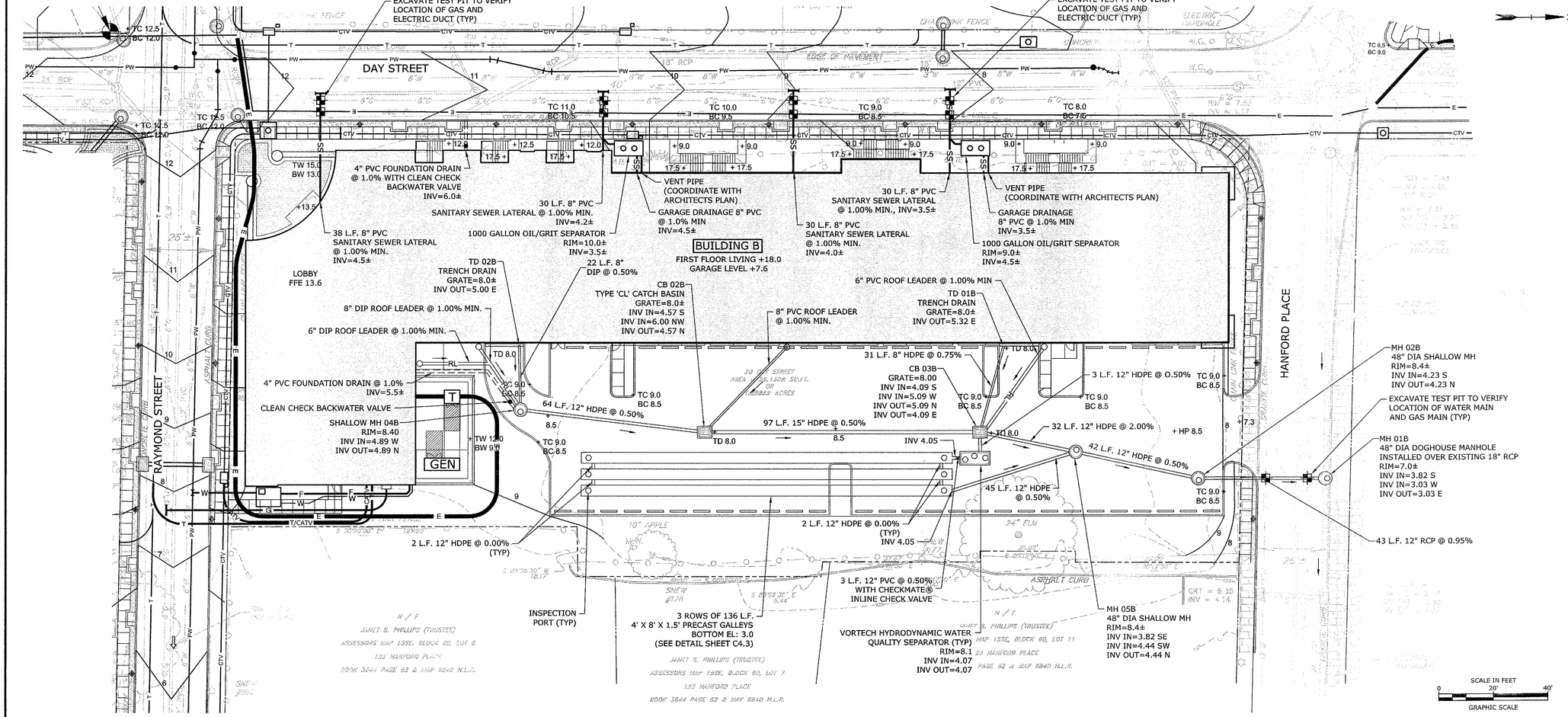

SITE STORM AND SANITARY SEWER PLAN NOTES

1. UNDERGROUND UTILITY, STRUCTURE AND FACILITY LOCATIONS DEPICTED HEREON HAVE BEEN COMPILED, IN PART, FROM RECORD MAPPING AND OTHER DATA SUPPLIED BY THE RESPECTIVE UTILITY COMPANIES, GOVERNMENTAL AGENCIES AND/OR OTHER SOURCES. THESE LOCATIONS MUST BE CONSIDERED APPROXIMATE IN NATURE. ADDITIONALLY, OTHER SUCH DATA MAY EXIST ON SITE, THE EXISTENCE OF WHICH ARE UNKNOWN TO TIGHE & BOND. THE EXISTENCE, SIZE AND LOCATION OF ALL SUCH FEATURES MUST BE DETERMINED AND VERIFIED IN THE FIELD BY APPROPRIATE AUTHORITIES PRIOR TO CONSTRUCTION @ CALL-BEFORE-YOU-DIG 1-800-922-4455.
2. REFERENCE IS MADE TO PLAN ENTITLED "PROPERTY , TOPOGRAPHIC & ALTA/ACSM LAND TITLE SURVEY" PREPARED FOR TRINITY WASHINGTON VILLAGE LIMITED PARTNERSHIP AND THE NORWALK HOUSING AUTHORITY, PREPARED BY WILLIAM W. SEYMOUR & ASSOCIATES P.C., DATED SEPTEMBER 4, 2013.
3. THE CONTRACTOR SHALL OBTAIN A CITY OF NORWALK EXCAVATION PERMIT PRIOR TO ANY WORK BEING PERFORMED WITHIN CITY RIGHT-OF-WAY.
4. ANY AND ALL WORK PERFORMED ON THE CITY OF NORWALK RIGHT-OF-WAY SHALL BE REQUIRED TO MEET THE CITY STANDARDS.
5. THE GENERAL CONTRACTOR SHALL PROVIDE FIELD ENGINEERING SERVICES TO ESTABLISH AND RECORD GRADES, LINES, AND ELEVATIONS.
6. THE CONTRACTOR SHALL ADJUST THE TOP OF FRAME/GRATE ELEVATIONS OF ALL EXISTING AND PROPOSED SANITARY/STORM/WATER MANHOLES, CATCH BASINS, AREA DRAINS, VALVE COVERS AND APPURTENANCES, WITHIN THE PROJECT LIMIT LINE TO MEET THE PROPOSED GRADES.
7. THE CONTRACTOR SHALL COORDINATE/VERIFY THE EXACT SIZES, LOCATIONS, ELEVATIONS, OF ALL PROPOSED BUILDING'S UTILITY SERVICES WITH THE PROJECT MECHANICAL, ELECTRICAL AND PLUMBING DRAWINGS PRIOR TO ANY CONSTRUCTION OPERATIONS.
8. EXCAVATION OF ANY TYPE SHALL BE ACCOMPLISHED IN SUCH A MANNER THAT UNDERGROUND UTILITIES OR STRUCTURES ARE NOT DAMAGED. IT SHALL BE THE CONTRACTOR'S SOLE RESPONSIBILITY FOR ANY DAMAGED INCURRED DURING EXCAVATION OPERATIONS. ALL EXCAVATION SHALL BE IN CONFORMANCE WITH THE LATEST OSHA REQUIREMENTS.
9. THE CONTRACTOR SHALL COORDINATE HIS WORK WITH THE WORK DONE BY THE RESPECTIVE UTILITY COMPANIES.
10. ANY AREAS DISTURBED BY CONSTRUCTION ACTIVITIES AND IS NOT PROVIDED WITH A SPECIFIC SITE IMPROVEMENT (PAVING, SIDEWALK, LANDSCAPING, ETC.) SHALL HAVE 4" TOPSOIL AND TURF ESTABLISHMENT IN ACCORDANCE WITH THE PROJECT LANDSCAPE SPECIFICATIONS.
11. THE LOCATIONS OF ITEMS NOT DIMENSIONED ON THE DRAWINGS SHALL BE FIELD STAKED BY THE CONTRACTOR AND THEIR LOCATIONS APPROVED BY THE OWNER'S REPRESENTATIVE PRIOR TO INSTALLATION.
12. INSTALL CLEANOUT TO GRADE 5' OFF FACE OF BUILDING ON ALL SANITARY LATERALS.
13. THE MANHOLE FRAME AND COVER SHALL BE CENTERED ON THE PRECAST OPENING. UNDER NO CIRCUMSTANCES WILL AN OFFSET FRAME AND COVER BE ACCEPTABLE. PRIOR TO FINAL PAVING, THE CONTRACTOR SHALL CHECK ALL MANHOLE STRUCTURES TO ASSURE THE FRAME AND COVER IS CENTERED ON THE PRECAST OPENING. THE CONTRACTOR WILL BE RESPONSIBLE FOR ALL WORK REQUIRED TO CENTER FRAME AND COVER.
14. INSTALL "FERNCO" STYLE FLEXIBLE COUPLINGS AT ALL LOCATIONS WHERE JOINING PIPES OF DIFFERENT MATERIALS AND/OR SIZES PER MANUFACTURER'S RECOMANDATIONS.
15. ALL PIPES AND FITTINGS SPECIFIED AS HDPE SHALL BE ADS N-12 WT (WATERTIGHT) PIPE AS MANUFACTURED BY ADVANCED DRAINAGE SYSTEMS, HILLIARD, OHIO.
16. THE CONTRACTOR SHALL MAINTAIN EXISTING STORM SEWER FLOWS BY PUMPING OR OTHER MEANS APPROVED BY THE OWNER'S REPRESENTATIVE DURING CONSTRUCTION OF THE PROPOSED STORM SEWER IN LOCATIONS WHERE STORM SEWER ARE BEING INSTALLED, REPLACED OR RELOCATED.
17. THE CONTRACTOR SHALL MAINTAIN SANITARY SEWER FLOWS BY PUMPING OR OTHER MEANS APPROVED BY THE OWNER'S REPRESENTATIVE DURING CONSTRUCTION OF THE PROPOSED SANITARY SEWER IN LOCATIONS WHERE SEWERS ARE BEING INSTALLED, REPLACED OR RELOCATED.
18. VERTICAL DATUM: NAVD88.
19. ALL ROOF DRAINS SHALL BE 6" PVC @ 1.0% MINIMUM SLOPE UNLESS NOTED OTHERWISE ON PLAN.
20. THE CONTRACTOR SHALL MAINTAIN EXISTING RUNOFF AND STORM SEWER FLOWS BY PUMPING OR OTHER MEANS APPROVED BY OWNERS REPRESENTATIVE DURING CONSTRUCTION.
21. THE EXCAVATION, HANDLING, AND MANAGEMENT OF ALL SITE SOILS, INCLUDING THE ON-SITE REUSE OF EXISTING SITE SOILS TO THE FULLEST EXTENT FEASIBLE, SHALL BE PERFORMED IN ACCORDANCE WITH THE EARTHWORK SPECIFICATION SECTION 02300 AND THE SOIL MANAGEMENT PLAN PREPARED FOR USE ON THIS PROJECT, PURSUANT TO THE STATE OF CONNECTICUT REMEDIATION STANDARD REGULATIONS (RSRS). LAWN/LANDSCAPED AREAS OF THE SITE NOT COVERED BY THE PROPOSED BUILDINGS, CONCRETE OR PAVEMENT SHALL BE COVERED BY A GEOTEXTILE MARKER BARRIER AND A MINIMUM 4-FOOT SURFICIAL THICKNESS OF "CLEAN" SOIL, MEETING THE CT RSRS, AT FINISHED GRADE.

SITE STORM AND SANITARY SEWER PLAN LEGEND

	EXISTING	PROPOSED
PROPERTY LINE		
MINOR CONTOUR	115	115
MAJOR CONTOUR	120	120
SPOT ELEVATION	120.12	× 120.12
EDGE OF PAVEMENT		
CURB LINE		
CONCRETE WALK		
BUILDING		
TEST PIT		TP
STORM SEWER		
STORM MANHOLE		
CATCH BASIN		
SANITARY SEWER		
SANITARY LATERAL		SS
SANITARY MANHOLE		S
ROOF LEADER		RL
LIGHT POLE		

Sep 16, 2014-11:37am Plotted By: SansoneM
Tighe & Bond, Inc. C:\Temp AutoCAD Save\Active\Publish_3988\DR-8-10071-01.dwg

Washington Village Phase 1

20 Day Street Building B

Norwalk, CT

Trinity Washington Village Limited Partnership
&
the Norwalk Housing Authority

E-ICON ARCHITECTURE
101 SUMMER ST BOSTON MA 02110
617-451-3333 www.iconarch.com

CONSULTANT
Tighe&Bond www.tighebond.com
1000 Bridgeport Avenue
Suite 320
Shelton, CT 06484
(203) 712-1100

STAMP

STATE OF CONNECTICUT ALFRED J. MASCIA 19826 LICENSED PROFESSIONAL ENGINEER 9-16-14

STATE OF CONNECTICUT JOHN W. BLOCK 6488 LICENSED PROFESSIONAL ENGINEER 9/16/14

MARK	DATE	DESCRIPTION
4	09-15-2014	PERMIT/ PRICING
3	06-13-2014	PRICING
2	11-18-2013	40% CHFA
1	09-19-2013	CAM/ SPECIAL PERMIT

PROJECT NO.: I0071
DRAWN BY: APW
CHECKED BY: EWL

SHEET TITLE

SITE STORM AND SANITARY SEWER PLAN

C1.1

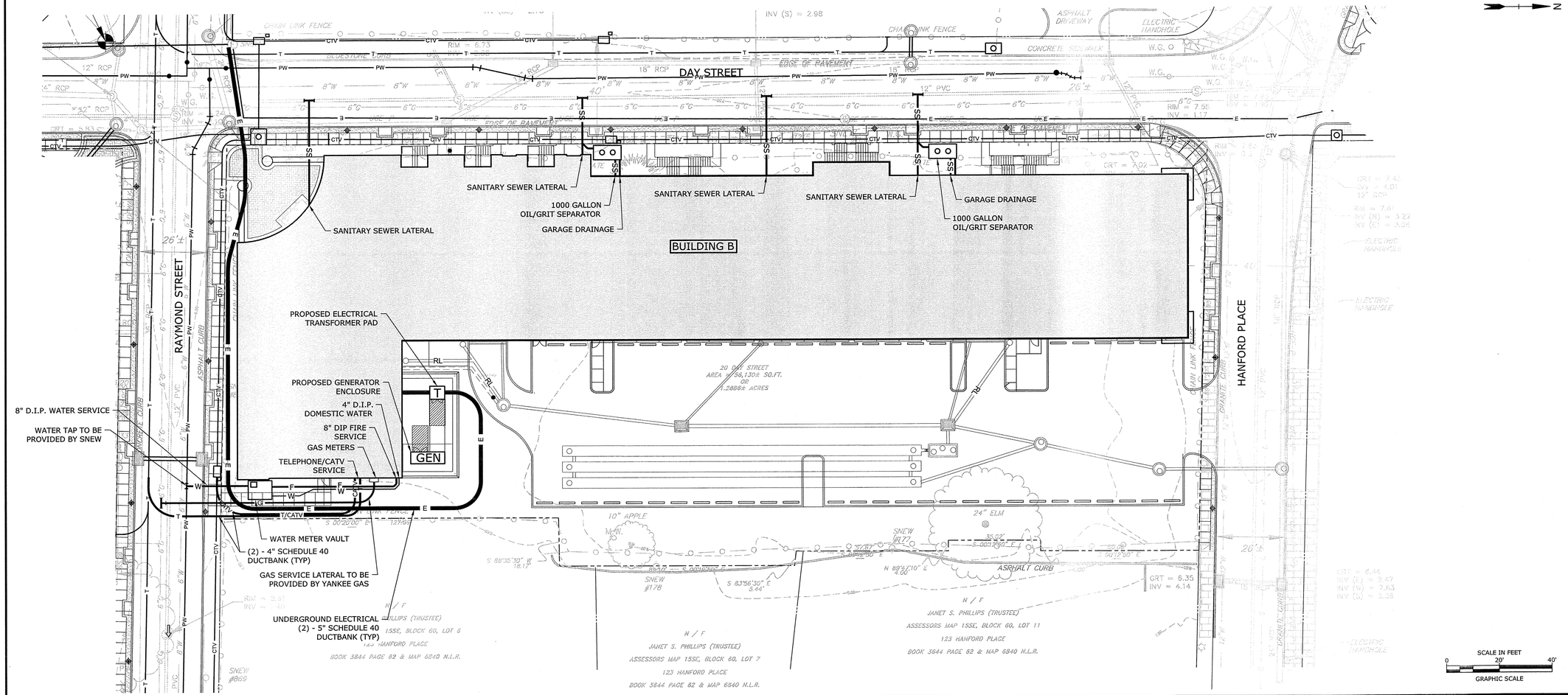

SITE UTILITY NOTES

1. UNDERGROUND UTILITY, STRUCTURE AND FACILITY LOCATIONS DEPICTED HEREON HAVE BEEN COMPILED, IN PART, FROM RECORD MAPPING AND OTHER DATA SUPPLIED BY THE RESPECTIVE UTILITY COMPANIES, GOVERNMENTAL AGENCIES AND/OR OTHER SOURCES. THESE LOCATIONS MUST BE CONSIDERED APPROXIMATE IN NATURE. ADDITIONALLY, OTHER SUCH DATA MAY EXIST ON SITE, THE EXISTENCE OF WHICH ARE UNKNOWN TO TIGHE & BOND. THE EXISTENCE, SIZE AND LOCATION OF ALL SUCH FEATURES MUST BE DETERMINED AND VERIFIED IN THE FIELD BY APPROPRIATE AUTHORITIES PRIOR TO CONSTRUCTION @ CALL-BEFORE-YOU-DIG 1-800-922-4455.

2. REFERENCE IS MADE TO PLAN ENTITLED "PROPERTY , TOPOGRAPHIC & ALTA/ACSM LAND TITLE SURVEY" PREPARED FOR TRINITY WASHINGTON VILLAGE LIMITED PARTNERSHIP AND THE NORWALK HOUSING AUTHORITY, PREPARED BY WILLIAM W. SEYMOUR & ASSOCIATES P.C., DATED SEPTEMBER 4, 2013.

3. THE CONTRACTOR SHALL ADJUST THE TOP OF FRAME/GRATE ELEVATIONS OF ALL EXISTING AND PROPOSED WATER MANHOLES, WATER GATES, GAS GATES, VALVE COVERS AND APPURTENANCES, WITHIN THE PROJECT LIMIT LINE TO MEET THE PROPOSED GRADES.

4. THE CONTRACTOR SHALL COORIDINATE/VERIFY THE EXACT SIZES, LOCATIONS, ELEVATIONS, OF ALL PROPOSED BUILDING'S UTILITY SERVICES WITH THE PROJECT MECHANICAL, ELECTRICAL AND PLUMBING DRAWINGS PRIOR TO ANY CONSTRUCTION OPERATIONS.

5. THE CONTRACTOR SHALL COORDINATE HIS WORK WITH THE WORK DONE BY THE RESPECTIVE UTILITY COMPANIES.

6. FOR INFORMATION ON THE PRIMARY ELECTRICAL WIRING AND THE SECONDARY ELECTRICAL CONDUITS, WIRING, AND MATERIALS - SEE PROJECT ELECTRICAL DRAWINGS.

10. WATER AND FIRE PROTECTION SERVICES AND HYDRANT ASSEMBLY SHALL CONFORM TO THE REQUIREMENTS OF SOUTH NORWALK ELECTRIC AND WATER. CONTRACTOR SHALL COORDINATE ALL WATER MAIN TAPS WITH SOUTH NORWALK ELECTRIC AND WATER.

11. TRANSFORMERS AND GENERATORS SHALL BE CONSTRUCTED ABOVE THE BASE FLOOD ELEVATION AND FLOOD PROOFED WITH A PASSIVE SYSTEM.

12. VERTICAL DATUM: NAVD88.

13. SEE LANDSCAPE ARCHITECTS PLANS FOR SITE LIGHTING.

14. THE EXCAVATION, HANDLING, AND MANAGEMENT OF ALL SITE SOILS, INCLUDING THE ON-SITE REUSE OF EXISTING SITE SOILS TO THE FULLEST EXTENT FEASIBLE, SHALL BE PERFORMED IN ACCORDANCE WITH THE EARTHWORK SPECIFICATION SECTION 02300 AND THE SOIL MANAGEMENT PLAN PREPARED FOR USE ON THIS PROJECT, PURSUANT TO THE STATE OF CONNECTICUT REMEDIATION STANDARD REGULATIONS (RSRS). LAWN/LANDSCAPED AREAS OF THE SITE NOT COVERED BY THE PROPOSED BUILDINGS, CONCRETE OR PAVEMENT SHALL BE COVERED BY A GEOTEXTILE MARKER BARRIER AND A MINIMUM 4-FOOT SURFICIAL THICKNESS OF "CLEAN" SOIL, MEETING THE CT RSRS, AT FINISHED GRADE.

SITE UTILITY PLAN LEGEND

	EXISTING	PROPOSED
PROPERTY LINE		
MINOR CONTOUR	115	115
MAJOR CONTOUR	120	120
EDGE OF PAVEMENT		
CURB LINE		
RETAINING WALL		
CONCRETE WALK		
BUILDING		
TEST PIT		TP
WATER MAIN	8"W	W
WATER GATE	WG	WG
HYDRANT		
GAS MAIN	8"G	G
GAS GATE	GG	GG
GAS METER	GM	
TEL-DATA - BURIED		T/CATV
TEL-DATA MANHOLE	T	
ELECTRICAL - BURIED	UGE	E
ELECTRICAL MANHOLE	SNEW	
ELECTRICAL HANDHOLE		
LIGHT POLE / UTILITY POLE	SNEW #16B	
STORM SEWER	24" SCP	
STORM MANHOLE		
CATCH BASIN		

Washington Village Phase 1

20 Day Street Building B

Norwalk, CT

Trinity Washington Village Limited Partnership
&
the Norwalk Housing Authority

E-ICON ARCHITECTURE
101 SUMMER ST BOSTON MA 02110
617-451-3333 www.iconarch.com

CONSULTANT
Tighe&Bond
www.tighebond.com
1000 Bridgeport Avenue
Suite 320
Shelton, CT 06484
(203) 712-1100

STAMP

STATE OF CONNECTICUT ALFRED J. MASON 22820 LICENSED PROFESSIONAL ENGINEER 9-15-14

STATE OF CONNECTICUT JOHN W. BLOCK 8488 LICENSED PROFESSIONAL ENGINEER 9/11/14

MARK	DATE	DESCRIPTION
4	09-15-2014	PERMIT/ PRICING
3	06-13-2014	PRICING
2	11-18-2013	40% CHFA
1	09-19-2013	CAM/ SPECIAL PERMIT

PROJECT NO.: I0071
DRAWN BY: APW
CHECKED BY: EWL

SHEET TITLE

SITE UTILITY PLAN

C2.1

Sep 16, 2014-11:37am Plotted By: SamsoneM
Tighe & Bond, Inc. J:\I10071 Washington Village\Drawing\Sheet\Building B\UT-B-I0071-01.dwg

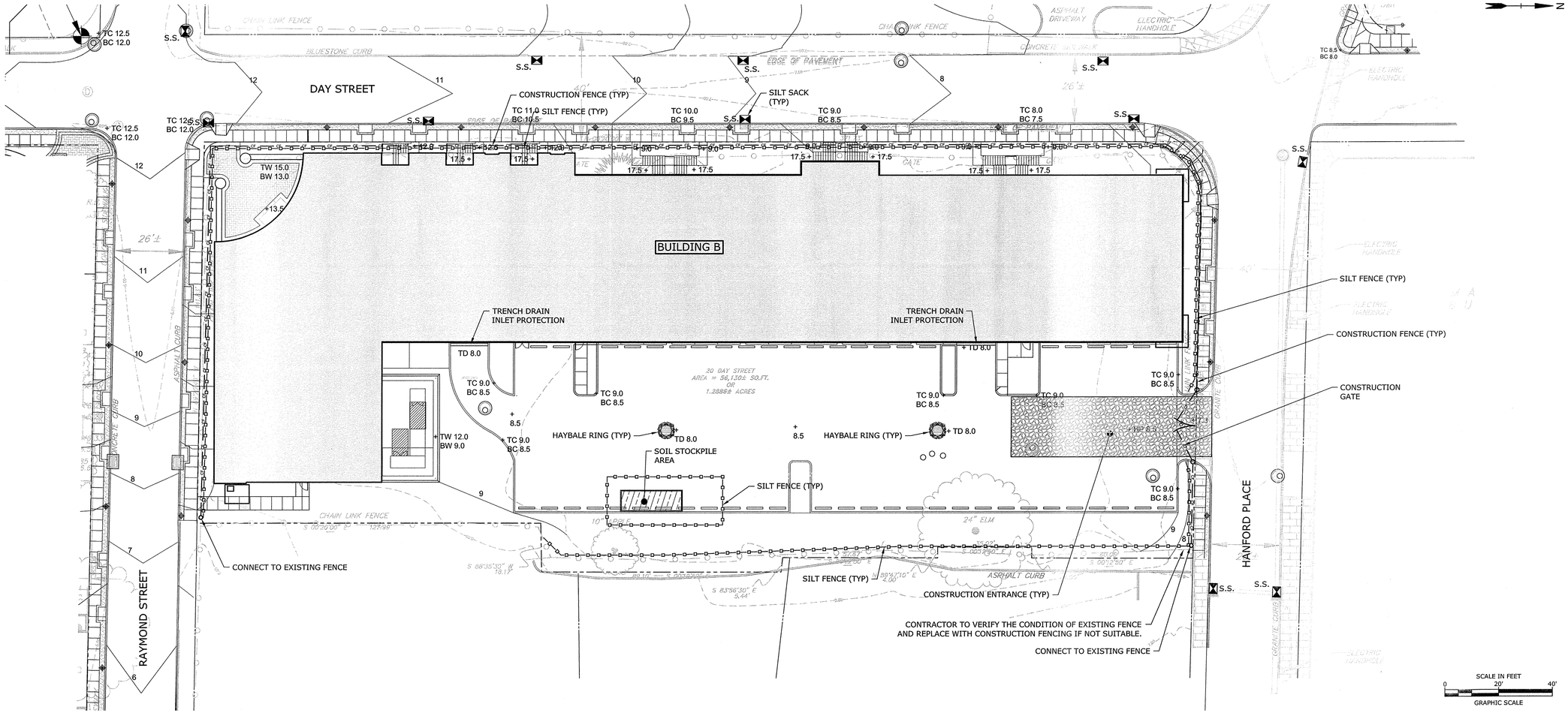

SITE SOIL EROSION AND SEDIMENT CONTROL PLAN NOTES

1. REFERENCE IS MADE TO PLAN ENTITLED "PROPERTY , TOPOGRAPHIC & ALTA/ACSM LAND TITLE SURVEY" PREPARED FOR TRINITY WASHINGTON VILLAGE LIMITED PARTNERSHIP AND THE NORWALK HOUSING AUTHORITY, PREPARED BY WILLIAM W. SEYMOUR & ASSOCIATES P.C., DATED SEPTEMBER 4, 2013.
2. CONTRACTOR SHALL CONTACT "CALL BEFORE YOU DIG" (1-800-922-4455) AT LEAST 48 HOURS PRIOR TO ANY EXCAVATION OPERATION.
3. UNDERGROUND UTILITY, STRUCTURE AND FACILITY LOCATIONS DEPICTED HEREON HAVE BEEN COMPILED, IN PART, FROM RECORD MAPPING AND OTHER DATA SUPPLIED BY THE RESPECTIVE UTILITY COMPANIES, GOVERNMENTAL AGENCIES AND/OR OTHER SOURCES. THESE LOCATIONS MUST BE CONSIDERED APPROXIMATE IN NATURE. ADDITIONALLY, OTHER SUCH DATA MAY EXIST ON SITE, THE EXISTENCE OF WHICH IS UNKNOWN TO TIGHE & BOND. THE EXISTENCE, SIZE AND LOCATION OF ALL SUCH FEATURES MUST BE DETERMINED AND VERIFIED IN THE FIELD BY APPROPRIATE AUTHORITIES PRIOR TO CONSTRUCTION @ CALL-BEFORE-YOU-DIG 1-800-922-4455.
4. ALL SEDIMENTATION AND EROSION CONTROL MEASURES SHALL BE IN ACCORDANCE WITH THE STANDARDS AND SPECIFICATIONS OF THE "2002 CONNECTICUT GUIDELINES FOR SOIL EROSION AND SEDIMENT CONTROL" DEEP BULLETIN NO 34, AND ALL AMENDMENTS AND ADDENDA THERETO AS PUBLISHED BY THE CONNECTICUT DEPARTMENT OF ENERGY AND ENVIRONMENTAL PROTECTION.
5. LAND DISTURBANCE SHALL BE KEPT TO THE MINIMUM NECESSARY FOR CONSTRUCTION.
6. ALL EROSION CONTROL MEASURES SHALL BE INSTALLED AS SHOWN ON THE PLANS AND ELSEWHERE AS ORDERED BY THE OWNER'S REPRESENTATIVE, OR THE CITY OF NORWALK.
7. ALL CATCH BASINS SHALL BE PROTECTED WITH SILT SACKS, HAYBALE RING, SILT FENCE OR BLOCK AND STONE INLET PROTECTION THROUGHOUT THE CONSTRUCTION PERIOD AND UNTIL ALL DISTURBED AREAS ARE THOROUGHLY STABILIZED.
8. WHEREVER POSSIBLE, EROSION AND SEDIMENT CONTROL MEASURES SHALL BE INSTALLED PRIOR TO CONSTRUCTION.
9. ADDITIONAL CONTROL MEASURES SHALL BE INSTALLED DURING CONSTRUCTION PERIOD AS ORDERED BY THE OWNER'S REPRESENTATIVE, OR THE CITY OF NORWALK.
10. ALL SEDIMENTATION AND EROSION CONTROL MEASURES SHALL BE MAINTAINED IN EFFECTIVE CONDITION THROUGHOUT THE CONSTRUCTION PERIOD.
11. SEDIMENT REMOVED SHALL BE DISPOSED OF LEGALLY OFFSITE.
12. THE CONTRACTOR SHALL BE RESPONSIBLE FOR CONSTRUCTION AND MAINTENANCE OF ALL EROSION CONTROL MEASURES THROUGHOUT THE CONSTRUCTION PERIOD.
13. THE CONTRACTOR SHALL MAINTAIN A SUPPLY OF SILT FENCE/HAYBALES AND ANTI-TRACKING CRUSHED STONE ON-SITE FOR EMERGENCY REPAIRS.
14. THE CONTRACTOR SHALL UTILIZE APPROVED METHODS/MATERIALS FOR PREVENTING THE BLOWING AND MOVEMENT OF DUST FROM EXPOSED SOIL SURFACES ONTO ADJACENT PROPERTIES AND SITE AREAS.
15. ALL DRAINAGE STRUCTURES SHALL BE INSPECTED WEEKLY BY THE CONTRACTOR AND CLEANED TO PREVENT THE BUILD-UP OF SILT.
16. KEEP ALL PAVED ROADWAYS CLEAN. SWEEP BEFORE FORECASTED STORMS OR WEEKLY AS NECESSARY.
17. TREAT ALL UNPAVED SURFACES WITH 4" MINIMUM OF TOPSOIL AND SEEDING PRIOR TO FINAL STABILIZATION.
18. HAYBALE BARRIERS AND SILT FENCING SHALL BE INSTALLED ALONG THE TOE OF CRITICAL CUT AND FILL SLOPES AS SHOWN ON THE PLANS AND AS DIRECTED BY THE OWNER'S REPRESENTATIVE OR THE CITY OF NORWALK.
19. ALL TRUCKS LEAVING THE SITE MUST BE COVERED.
20. DISTURBED SLOPES SHALL BE TREATED WITH AN EROSION CONTROL SLURRY CONSISTING OF A MIXTURE OF WOOD FIBER MULCH, PLANT SEED AND 3 GALLONS/ACRE OF SILT STOP 640 LIQUID FLOCCULENT. THE FLOCCULENT IS PROVIDED BY HYDROGRASS TECHNOLOGIES, OXFORD MASSACHUSETTS.
21. ALL SEDIMENTATION AND EROSION CONTROLS SHALL BE CHECKED WEEKLY AND AFTER EACH RAINFALL EVENT. NECESSARY REPAIRS SHALL BE MADE WITHOUT DELAY.
22. PRIOR TO ANY FORECASTED RAINFALL, EROSION AND SEDIMENT CONTROLS SHALL BE INSPECTED AND REPAIRED AS NECESSARY.
23. AFTER ALL DISTURBED AREAS HAVE BEEN STABILIZED; EROSION CONTROLS MAY BE REMOVED ONCE AUTHORIZATION TO DO SO HAS BEEN SECURED FROM THE CITY OF NORWALK. DISTURBED AREAS SHALL BE SEEDED AND MULCHED.
24. CONTRACTOR IS TO COMPLY WITH THE REQUIREMENTS OF THE SOIL EROSION AND SEDIMENTATION CONTROL PLAN.
25. VERTICAL DATUM: NAVD88.
26. SOIL STOCKPILE SHALL BE FLOODPROOFED TO ELEVATION 13 NAVD88. THE DETAIL SHEET, C3.2, PRESENTS ONE POTENTIAL METHOD FOR THE CONTRACTOR TO FLOODPROOF THESE STOCKPILES. CONTRACTOR MAY PROPOSE ALTERNATE MEANS OF FLOODPROOFING STOCKPILE, SUBJECT TO APPROVAL BY ENGINEER.
27. HAZARDOUS MATERIALS INCLUDING, BUT NOT LIMITED TO, FUELS, MAINTENANCE FLUIDS, AND OTHER MATERIALS MUST BE STORED ABOVE THE 500 YEAR FLOODPLAIN AT THE END OF THE DAY.
21. THE EXCAVATION, HANDLING, AND MANAGEMENT OF ALL SITE SOILS, INCLUDING THE ON-SITE REUSE OF EXISTING SITE SOILS TO THE FULLEST EXTENT FEASIBLE, SHALL BE PERFORMED IN ACCORDANCE WITH THE EARTHWORK SPECIFICATION SECTION 02300 AND THE SOIL MANAGEMENT PLAN PREPARED FOR USE ON THIS PROJECT, PURSUANT TO THE STATE OF CONNECTICUT REMEDIATION STANDARD REGULATIONS (RSRS). LAWN/LANDSCAPED AREAS OF THE SITE NOT COVERED BY THE PROPOSED BUILDINGS, CONCRETE OR PAVEMENT SHALL BE COVERED BY A GEOTEXTILE MARKER BARRIER AND A MINIMUM 4-FOOT SURFICIAL THICKNESS OF "CLEAN" SOIL, MEETING THE CT RSRS, AT FINISHED GRADE.

SITE SOIL EROSION AND SEDIMENTATION CONTROL PLAN LEGEND

PROPERTY LINE

SILT SACK

HAYBALE

CONSTRUCTION ENTRANCE

SILT FENCE

CONSTRUCTION FENCE

CONSTRUCTION GATE

HAYBALE BARRIER

TEMPORARY SOIL STOCKPILE AREA

Washington Village Phase 1

20 Day Street Building B

Norwalk, CT

Trinity Washington Village Limited Partnership
&
the Norwalk Housing Authority

ICON ARCHITECTURE
101 SUMMER ST BOSTON MA 02110
617-451-3333 www.iconarch.com

CONSULTANT
Tighe&Bond
www.tighebond.com
1000 Bridgeport Avenue
Suite 320
Shelton, CT 06484
(203) 712-1100

STAMP

ALFRED J. MASCIA JR. STATE OF CONNECTICUT 12820 LICENSED PROFESSIONAL ENGINEER 9-16-14

JOHN W. BLOOM STATE OF CONNECTICUT 8488 LICENSED PROFESSIONAL ENGINEER 9/11/14

MARK	DATE	DESCRIPTION
4	09-15-2014	PERMIT/ PRICING
3	06-13-2014	PRICING
2	11-18-2013	40% CHFA
1	09-19-2013	CAM/ SPECIAL PERMIT

PROJECT NO.: I0071
DRAWN BY: APW
CHECKED BY: EWL

SHEET TITLE

SITE SOIL EROSION AND SEDIMENT CONTROL PLAN

C3.1

Sep 16, 2014-11:38am Plotted By: Sansone\rl
Tighe & Bond, Inc. J:\I\0071 Washington Village\Drawing\Sheet\Building B\SESC-B-10071-01.dwg

SOIL EROSION AND SEDIMENTATION CONTROL NARRATIVE

THE PROJECT PROPOSES TO CONSTRUCT A 71 UNIT RESIDENTIAL BUILDING IN NORWALK, CT. THE PROJECT SITE IS BOUNDED BY RAYMOND STREET TO THE SOUTH, DAY STREET TO THE WEST, TOLLES STREET TO THE NORTH, AND PRIVATE PROPERTIES OFF OF WATER STREET TO THE EAST.

THE PROPOSED PROJECT WILL INCLUDE THE CONSTRUCTION OF THE RESIDENTIAL BUILDING, A 98 CAR PARKING LOT, RETAINING WALLS, CURBING, SIDEWALKS, LANDSCAPE AND LIGHTING. PROPOSED BUILDING UTILITIES SUCH AS DOMESTIC WATER, FIRE PROTECTION, TELECOMMUNICATIONS, ELECTRICAL, NATURAL GAS, AND SANITARY SEWER WILL BE PROVIDED FROM EXISTING MAINS LOCATED IN DAY STREET AND RAYMOND STREET.

STORMWATER MANAGEMENT WILL BE ACCOMMODATED ON-SITE. SURFACE RUNOFF WILL BE COLLECTED AND CONVEYED INTO A WATER QUALITY STRUCTURE AND AN UNDERGROUND INFILTRATION SYSTEM THAT WILL TREAT THE WATER QUALITY VOLUME AND PROVIDE POLLUTANT REMOVAL IN ACCORDANCE WITH THE 2004 CONNECTICUT STORMWATER QUALITY MANUAL.

THE PROJECT IS PROPOSED TO BE CONSTRUCTED IN A SINGLE PHASE; APPROXIMATELY 1.386 ACRES WILL BE DISTURBED.

SOIL EROSION AND SEDIMENTATION CONTROL MEASURES SHALL CONFORM TO THE STANDARDS OUTLINED IN THE CONNECTICUT DEPARTMENT OF ENERGY AND ENVIRONMENTAL PROTECTION (CTDEEP), "2002 CONNECTICUT GUIDELINES FOR SOIL EROSION AND SEDIMENT CONTROL", LATEST REVISION.

CONSTRUCTION SEQUENCE

GENERAL

1. THE PROPOSED DEVELOPMENT IS ENTITLED "DAY STREET - BUILDING B"
2. ESTIMATED PROJECT TIMELINE:
   - PROJECT START: FALL 2014
   - PROJECT COMPLETION: FALL 2015
3. THE SITE IS LOCATED AT 20 DAY STREET IN NORWALK, CONNECTICUT.

CONSTRUCTION SEQUENCE

1. FLAG THE LIMITS OF CONSTRUCTION NECESSARY TO FACILITATE THE PRECONSTRUCTION MEETING.
2. HOLD PRECONSTRUCTION MEETING WITH THE CITY, THE OWNERS REPRESENTATIVE AND THE ENGINEER. (REMEMBER TO CALL BEFORE YOU DIG 1-800-922-4455).
3. FLAG REMAINDER OF THE LIMITS OF CONSTRUCTION AND TREE PROTECTION ZONES.
4. INSTALL THE CONSTRUCTION ENTRANCE.
5. INSTALL PERIMETER EROSION AND SEDIMENT CONTROLS AND TREE PROTECTION DEVICES IN ACCORDANCE WITH THE SESC PLAN.
6. CUT ANY TREES WITHIN THE DEFINED CLEARING LIMITS AND REMOVE CUT WOOD. CHIP BRUSH AND SLASH, STOCKPILE CHIPS FOR FUTURE USE OR REMOVE OFF SITE.
7. CONSTRUCT SETTLING BASINS AND/OR SUMP PITS, AS REQUIRED.
8. STRIP AND STOCKPILE ALL TOPSOIL THAT IS WITHIN THE FOOTPRINT OF THE CONSTRUCTION SITE AND REFERENCE STOCKPILE MANAGEMENT FOR EROSION AND SEDIMENT CONTROLS. (SEE 2002 CT GUIDELINES FOR SOIL EROSION AND SEDIMENT CONTROL CHAPTER 4, PART II ON STOCKPILE MANAGEMENT). EITHER REMOVE TREE STUMPS TO AN APPROVED DISPOSAL SITE OR CHIP IN PLACE AS INDICATED ON THE PLANS.
9. MAKE ALL CUTS AND FILLS REQUIRED. ESTABLISH THE SUBGRADE FOR THE TOPSOIL AREAS, AND PARKING AS REQUIRED AND BENCH THE BUILDING TO A SUBGRADE. ALLOW A REASONABLE AMOUNT OF AREA AROUND THE FOOTPRINT OF THE BUILDING FOR THE CONSTRUCTION ACTIVITIES.
10. BEGIN CONSTRUCTION OF THE BUILDING.
11. PRIOR TO INSTALLING SURFACE WATER CONTROLS SUCH AS TEMPORARY DIVERSIONS AND STONE DIKES, INSPECT EXISTING CONDITIONS TO ENSURE DISCHARGE LOCATIONS ARE STABLE. IF NOT STABLE, REVIEW DISCHARGE CONDITIONS WITH THE DESIGN ENGINEER AND IMPLEMENT ADDITIONAL STABILIZATION MEASURES PRIOR TO INSTALLING WATER SURFACE CONTROLS.
12. INSTALL ALL SANITARY SEWERS, DRAINAGE SYSTEMS AND UTILITIES TO WITHIN 5 FEET OF THE BUILDING OR AS OTHERWISE MODIFIED BY THE DESIGN ENGINEER TO ADJUST FOR UNFORESEEN SITE CONDITIONS.
13. PREPARE SUB-BASE, SLOPES, PARKING AREAS AND ANY OTHER AREA OF DISTURBANCE FOR FINAL GRADING.
14. INSTALL PROCESS AGGREGATE IN PARKING AREAS.
15. PLACE TOPSOIL WHERE REQUIRED. COMPLETE THE PERIMETER LANDSCAPE PLANTINGS.
16. FINE GRADE, RAKE, SEED AND MULCH TO WITHIN 2 FEET OF THE CURBING.
17. UPON SUBSTANTIAL COMPLETION OF THE BUILDING, COMPLETE THE BALANCE OF SITE WORK AND STABILIZATION OF ALL OTHER DISTURBED AREAS. INSTALL FIRST COURSE OF PAVING.
18. WHEN ALL OTHER WORK HAS BEEN COMPLETED, REPAIR AND SWEEP ALL PAVED AREAS FOR THE FINAL COURSE OF PAVING. INSPECT THE DRAINAGE SYSTEM AND CLEAN AS NEEDED.
19. INSTALL FINAL COURSE OF PAVEMENT.
20. AFTER SITE IS STABILIZED REMOVE TEMPORARY EROSION AND SEDIMENT CONTROLS (E.G. GEOTEXTILE SILT FENCES).
21. THE EXCAVATION, HANDLING, AND MANAGEMENT OF ALL SITE SOILS, INCLUDING THE ON-SITE REUSE OF EXISTING SITE SOILS TO THE FULLEST EXTENT FEASIBLE, SHALL BE PERFORMED IN ACCORDANCE WITH THE EARTHWORK SPECIFICATION SECTION 02300 AND THE SOIL MANAGEMENT PLAN PREPARED FOR USE ON THIS PROJECT, PURSUANT TO THE STATE OF CONNECTICUT REMEDIATION STANDARD REGULATIONS (RSRS). LAWN/LANDSCAPED AREAS OF THE SITE NOT COVERED BY THE PROPOSED BUILDINGS, CONCRETE OR PAVEMENT SHALL BE COVERED BY A GEOTEXTILE MARKER BARRIER AND A MINIMUM 4-FOOT SURFICIAL THICKNESS OF "CLEAN" SOIL, MEETING THE CT RSRS, AT FINISHED GRADE.

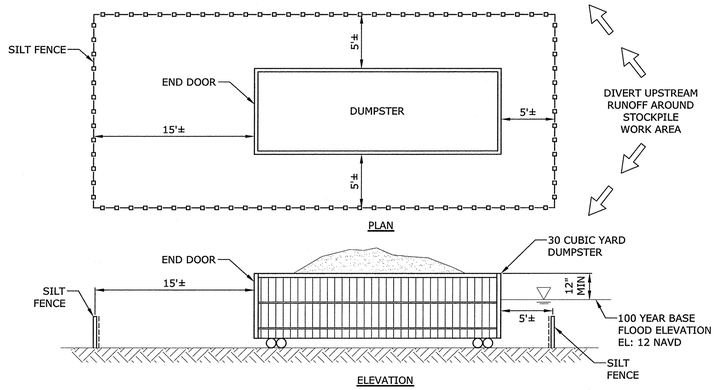

SOIL STOCKPILE FLOODPROOFING
NO SCALE

NOTE:
DUMPSTER TO BE ANCHORED TO RESIST BUOYANT FORCES SUBMIT CALCULATIONS TO ENGINEER.

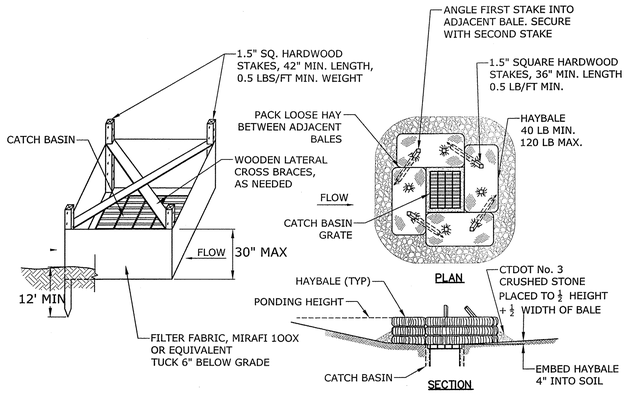

SILT FENCE INSTALLATION AT CATCH BASIN AT LOW POINTS

HAYBALE FILTER INSTALLATION AT CATCH BASIN AT LOW POINTS

CATCH BASIN EROSION CONTROL
NO SCALE

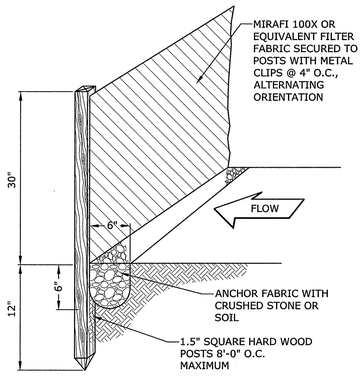

SILT FENCE
NO SCALE

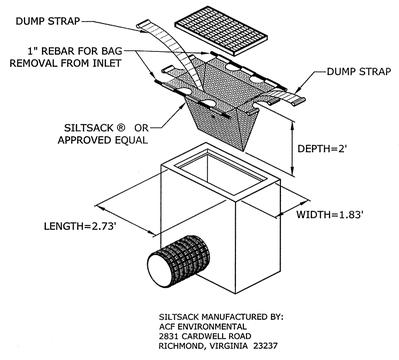

SILTSACK MANUFACTURED BY:
ACF ENVIRONMENTAL
2831 CARDWELL ROAD
RICHMOND, VIRGINIA 23237

SILTSACK®
NO SCALE

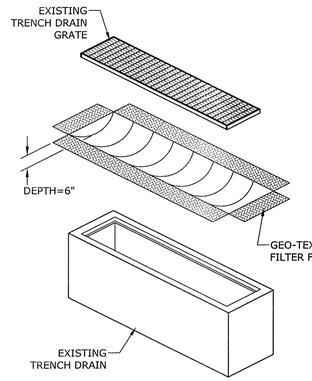

TRENCH DRAIN INLET PROTECTION
NO SCALE

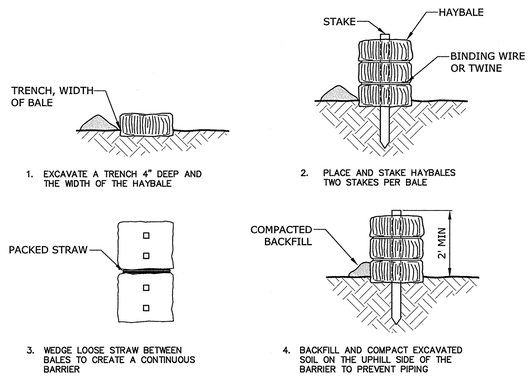

PLACEMENT AND CONSTRUCTION OF HAYBALE BARRIER
NO SCALE

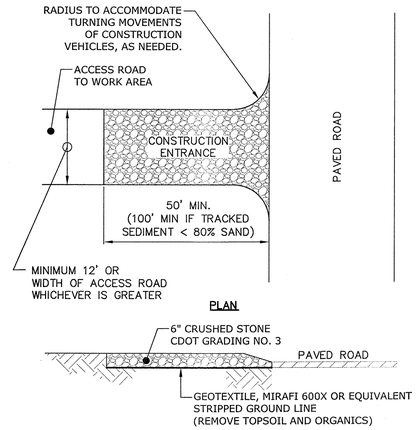

CONSTRUCTION ENTRANCE
NO SCALE

Washington Village Phase 1

20 Day Street Building B

Norwalk, CT

Trinity Washington Village Limited Partnership
&
the Norwalk Housing Authority

E-ICON ARCHITECTURE
101 SUMMER ST BOSTON MA 02110
617-451-3333 www.iconarch.com

CONSULTANT
Tighe&Bond
www.tighebond.com
1000 Bridgeport Avenue
Suite 320
Shelton, CT 06484
(203) 712-1100

STAMP

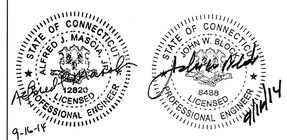

MARK	DATE	DESCRIPTION
4	09-15-2014	PERMIT/ PRICING
3	06-13-2014	PRICING
2	11-18-2013	40% CHFA
1	09-19-2013	CAM/ SPECIAL PERMIT

PROJECT NO.: I0071
DRAWN BY: MDS
CHECKED BY: EWL

SHEET TITLE

SOIL EROSION AND SEDIMENT CONTROL NARRATIVE AND DETAILS

C3.2

09/16/2014

Sep 16, 2014-11:38am Plotted By: SansoneM
Tighe & Bond, Inc. J:\I\I0071 Washington Village\Drawing\Sheet\Building B\ESEC-B-I0071-02.dwg

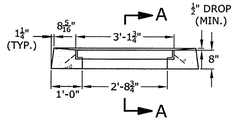

CROSS SECTION

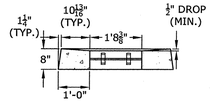

SECTION A–A

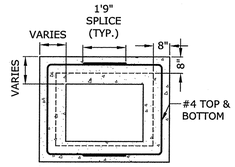

REDUCER SECTION (TYP.)

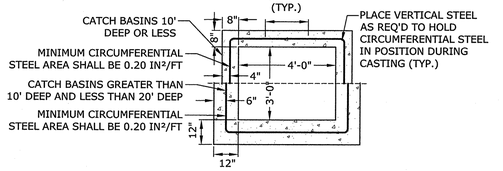

TYPE "C-L" CATCH BASIN
NO SCALE

RISER SECTION (TYP.)

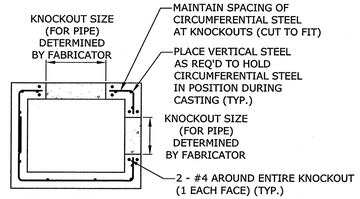

TYPICAL SECTION THRU RISER WITH KNOCKOUTS

NOTES:

1. REINFORCEMENT SHALL CONFORM TO ASTM A615, GRADE 60.
2. DETAILS ON THIS SHEET SHOW STANDARD REINFORCEMENT. WELDED WIRE FABRIC WITH AN AREA EQUAL TO OR GREATER THAN THE REINFORCING SHOWN MAY BE SUBSTITUTED.
3. ALL LAP SPLICES, DEVELOPMENT LENGTHS, BENDS FOR REINFORCEMENT, AND WELDED WIRE FABRIC SHALL CONFORM TO AASHTO STANDARD SPECIFICATIONS FOR HIGHWAY BRIDGES.
4. ALL REINFORCEMENT SHALL HAVE A MINIMUM CLEAR COVER OF 2", EXCEPT FOR BENEATH BOTTOM REINFORCEMENT IN TOP SLABS, WHERE THE MINIMUM MAY BE 1½"
5. MINIMUM CONCRETE COMPRESSIVE STRENGTH FC'=4,000PSI SHALL BE OBTAINED BEFORE SHIPPING.
6. BASES AND RISERS AT A DEPTH OF 20' AND GREATER SHALL BE DESIGNED BY THE CONTRACTOR AND WORKING DRAWINGS SHALL BE SUBMITTED TO THE ENGINEER FOR REVIEW.
7. SEE STANDARD DRAWING 507-K FOR CATCH BASIN FRAMES. INSTALL BICYCLE GRATES.
8. FOR DOT MAINTENANCE PERSONNEL, RISERS MAY BE PREFABRICATED WITH PIPE OPENINGS IN ALL FOUR WALLS. ADEQUATE REINFORCING AROUND PIPE OPENINGS TO CONFORMING TO THESE PLANS SHALL BE PROVIDED. ANY RISERS USED WHERE A PIPE OPENING IS TO REMAIN IN PLACE MUST BE FORMED UP WITH BRICK AS DIRECTED BY THE ENGINEER.
9. RISERS SHALL NEVER HAVE CORNER PIPE ENTRIES. WHERE THE ALIGNMENT OF THE PIPE WITH RESPECT TO THE CORNER OF THE CATCH BASIN CANNOT BE CHANGED, A ROUND STRUCTURE CONFORMING TO ASTM C478 SHALL BE USED. REINFORCING FOR THE ROUND TOP SLAB WITH A RECTANGULAR OPENING SHALL CONFORM TO DETAILS SHOWN HERE.
10. ALL PIPE OPENINGS SHALL BE CLOSED USING MATERIALS WHICH CONFORM TO STATE OF CONNECTICUT STANDARD SPECIFICATIONS SECTION M.08.02. IF THE ENGINEER DETERMINES THAT THE CLOSURE OF ANY PIPE OPENING IS UNSATISFACTORY, THE CONTRACTOR SHALL RECLOSE SAID OPENING AT NO ADDITIONAL COST TO THE STATE. KNOCKOUTS FOR PIPE OPENINGS SHALL NOT RESULT IN A REDUCED WALL THICKNESS.
11. THE LATEST STATE OF CONNECTICUT STANDARD SPECIFICATIONS AND SUPPLEMENTALS SHALL GOVERN.
12. FOR ADDITIONAL DETAILS, SEE OTHER CATCH BASIN SHEETS.
13. WALL THICKNESS OF ALL CB'S OVER 10' DEEP SHALL BE INCREASED TO 12" THICK. INSIDE DIMENSION SHALL REMAIN THE SAME. (THE 12" THICKNESS SHALL START AFTER THE FIRST 10")
14. BUTYL RUBBER JOINT SEAL SHALL CONFORM TO AASHTO M-198 AND MORTAR SHALL CONFORM TO THE LATEST STATE OF CONNECTICUT STANDARD SPECIFICATIONS MATERIAL SECTION M11.04.
15. SHRINKAGE AND TEMPERATURE REINFORCEMENT SHALL BE PROVIDED IN THE TOPS OF SLABS. THE TOTAL AREA OF REINFORCEMENT PROVIDED SHALL BE AT LEAST 0.125 IN²/FT IN EACH DIRECTION. THE MAXIMUM SPACING OF THIS REINFORCEMENT SHALL NOT EXCEED 18 INCHES.
16. THE DETAILS SHOWN IN THE PLAN VIEW FOR THE PRECAST CONCRETE ROUND STRUCTURES SHALL ALSO BE USED FOR CONVERTING MANHOLES TO CATCH BASINS.
17. ANY CATCH BASINS CONSTRUCTED, MODIFIED OR DISTURBED IN ANY FASHION SHALL HAVE "NO DUMPING" CURB MARKER APPLIED TO CATCH BASIN TOP OR CURB NEXT TO GRATE.USING ADHESIVE PROVIDED BY THE CITY FOLLOWING INSTALLATION DIRECTIONS PROVIDED BY THE MANUFACTURER.

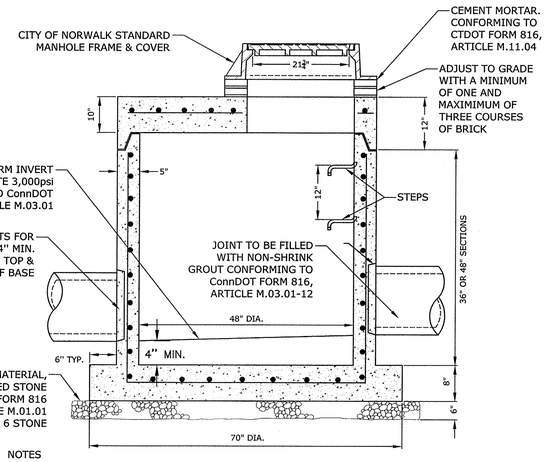

NOTES

1. REINFORCING ASTM A185 AREA 48" DIA. 0.12 SQ. IN./V.F., AREA 60" DIA. 0.17 SQ. IN./V.F. REINFORCE BELL & SPIGOT.
2. CONCRETE COMPRESSIVE STRENGTH: 5,000 psi - 28 DAYS
3. MANHOLE STEP TO CONFORM TO OSHA AND ASTM SPECIFICATIONS.
4. MONOLITHIC BASE SECTION.

48" DIA. SHALLOW MANHOLE
NO SCALE

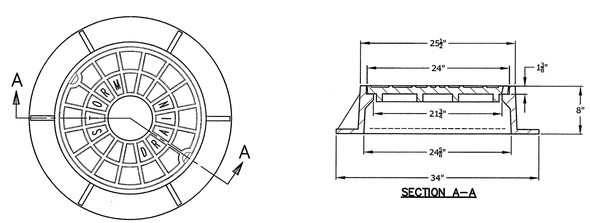

SECTION A–A

NOTE:
MANHOLE FRAMES & COVERS SHALL BE PATTERN #1007D AS MANUFACTURED BY THE CAMPBELL FOUNDRY COMPANY OF NORTH HAVEN, CONNECTICUT, OR APPROVED EQUAL.

CITY OF NORWALK
MANHOLE FRAME AND COVER
NO SCALE

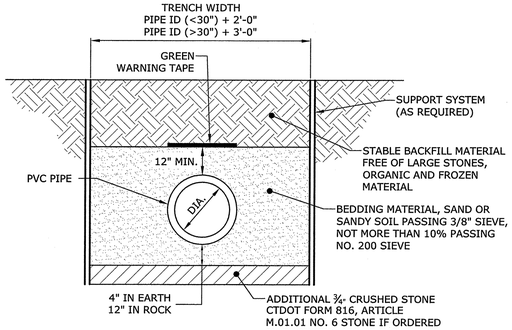

P.V.C. TRENCH BEDDING
NO SCALE

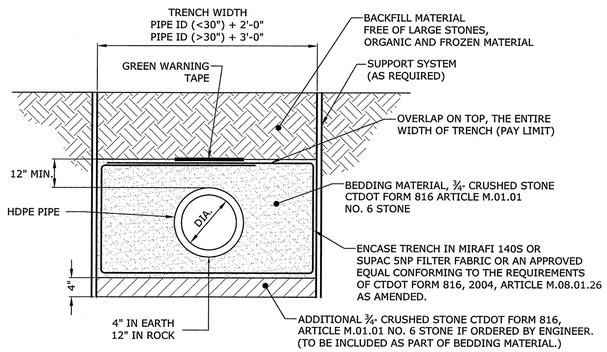

HDPE TRENCH BEDDING
NO SCALE

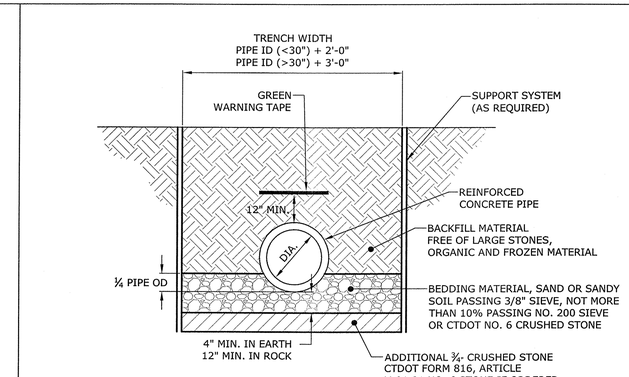

CIRCULAR R.C.P. TRENCH BEDDING
NO SCALE

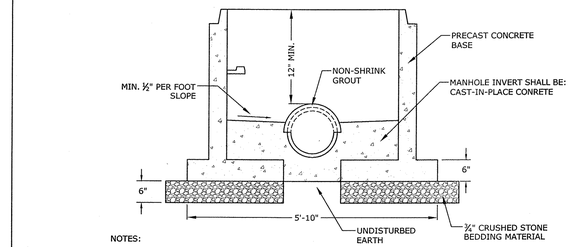

NOTES:

1. MINIMUM 4' DIAMETER MANHOLE.
2. DOGHOUSE OPENING MAY ONLY BE USED WHEN PLACING A NEW MANHOLE OVER AN EXISTING LINE; OTHERWISE, THE OPENING MUST BE CAST. SIZE, LOCATION AND ANGLE OF ENTRY SHOULD BE AS REQUIRED BY THE PLANS.
3. OPENINGS IN PRECAST UNITS ARE TO BE 4" MINIMUM TO 8" MAXIMUM LARGER THAN THE OUTSIDE DIAMETER OF THE EXISTING PIPE.
4. TOP HALF OF EXISTING PIPE TO BE REMOVED FOR FULL LENGTH EXPOSED INSIDE MANHOLE. EXISTING MAIN TO BE NEATLY CUT ALONG THE SPRING LINE OF THE PIPE.
5. SEE STORM MANHOLE DETAIL FOR ADDITIONAL INFORMATION.

STORM DRAINAGE
DOGHOUSE MANHOLE BASE
NO SCALE

Washington Village Phase 1

20 Day Street Building B

Norwalk, CT

Trinity Washington Village Limited Partnership
&
the Norwalk Housing Authority

E-ICON ARCHITECTURE
101 SUMMER ST BOSTON MA 02110
617-451-3333 www.iconarch.com

CONSULTANT
Tighe&Bond www.tighebond.com
1000 Bridgeport Avenue
Suite 320
Shelton, CT 06484
(203) 712-1100

STAMP

STATE OF CONNECTICUT ALFRED J. MASON 12820 LICENSED PROFESSIONAL ENGINEER 9-16-14

STATE OF CONNECTICUT JOHN W. BLOCK 8488 LICENSED PROFESSIONAL ENGINEER 9/16/14

MARK	DATE	DESCRIPTION
4	09-15-2014	PERMIT/ PRICING
3	06-13-2014	PRICING
2	11-18-2013	40% CHFA
1	09-19-2013	CAM/ SPECIAL PERMIT

PROJECT NO.: I0071
DRAWN BY: MDS
CHECKED BY: EWL

SHEET TITLE

STORM DRAINAGE DETAILS

C4.1

09/16/2014

Sep 16, 2014-9:08am Plotted By: Stevenson
Tighe & Bond, Inc. J:\I\I0071\2 Washington Village\Drawing\Sheet\Building B\DS-B-I0071-01.dwg

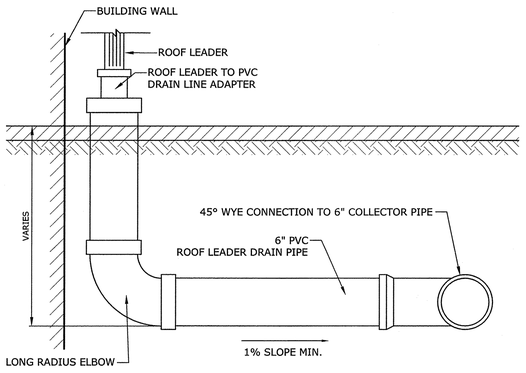

ROOF LEADER DRAIN LINE
NO SCALE

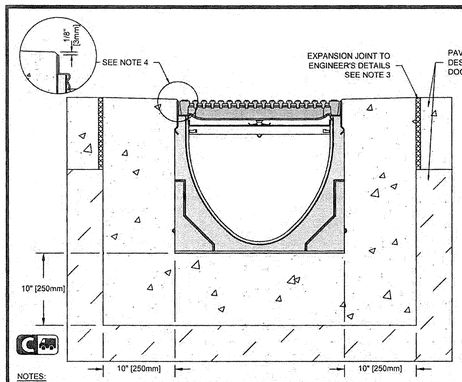

NOTES:
1. IT IS NECESSARY TO ENSURE MINIMUM DIMENSIONS SHOWN ARE SUITABLE FOR EXISTING GROUND CONDITIONS. *ENGINEERING ADVICE MAY BE REQUIRED.*
2. MINIMUM CONCRETE STRENGTH OF 4,000 PSI IS RECOMMENDED. CONCRETE SHOULD BE VIBRATED TO ELIMINATE AIR POCKETS.
3. EXPANSION AND CONTRACTION CONTROL JOINTS AND REINFORCEMENT ARE RECOMMENDED TO PROTECT CHANNEL AND CONCRETE SURROUND. *ENGINEERING ADVICE MAY BE REQUIRED.*
4. THE FINISHED LEVEL OF THE CONCRETE SURROUND MUST BE APPROX. 1/8" [3mm] ABOVE THE TOP OF THE CHANNEL EDGE.
5. CONCRETE BASE THICKNESS SHOULD MATCH SLAB THICKNESS. ENGINEERING ADVICE MAY BE REQUIRED TO DETERMINE PROPER LOAD CLASS.
6. REFER TO ACO'S LATEST INSTALLATION INSTRUCTIONS FOR FURTHER DETAILS.

SPECIFICATION CLAUSE

K300 KLASSIKDRAIN - LOAD CLASS C

GENERAL
THE SURFACE DRAINAGE SYSTEM SHALL BE POLYMER CONCRETE K300 CHANNEL SYSTEM WITH GALVANIZED STEEL EDGE RAILS AS MANUFACTURED BY ACO POLYMER PRODUCTS, INC.

MATERIALS
CHANNELS SHALL BE MANUFACTURED FROM POLYESTER RESIN POLYMER CONCRETE WITH AN INTEGRALLY CAST-IN GALVANIZED STEEL EDGE RAIL. MINIMUM PROPERTIES OF POLYMER CONCRETE WILL BE AS FOLLOWS:

COMPRESSIVE STRENGTH:	14,000 PSI
FLEXURAL STRENGTH:	4,000 PSI
TENSILE STRENGTH:	1,500 PSI
WATER ABSORPTION:	0.07%
FROST PROOF	YES
DILUTE ACID AND ALKALI RESISTANT	YES
B117 SALT SPRAY TEST COMPLIANT	YES

THE SYSTEM SHALL BE 12" (300mm) NOMINAL INTERNAL WIDTH WITH A 14.2" (360mm) OVERALL WIDTH AND A BUILT-IN SLOPE OF 0.5%. CHANNEL INVERT SHALL HAVE DEVELOPED "V" SHAPE. ALL CHANNELS SHALL BE INTERLOCKING WITH A MALE/FEMALE JOINT.

THE COMPLETE DRAINAGE SYSTEM SHALL BE BY ACO POLYMER PRODUCTS, INC. ANY DEVIATION OR PARTIAL SYSTEM DESIGN AND/OR IMPROPER INSTALLATION WILL VOID ANY AND ALL WARRANTIES PROVIDED BY ACO POLYMER PRODUCTS, INC.

CHANNEL SHALL WITHSTAND LOADING TO PROPER LOAD CLASS AS OUTLINED BY EN 1433. GRATE TYPE SHALL BE APPROPRIATE TO MEET THE SYSTEM LOAD CLASS SPECIFIED AND INTENDED APPLICATION. GRATES SHALL BE SECURED USING 'QUICKLOK' BOLTLESS LOCKING SYSTEM. CHANNEL AND GRATE SHALL BE CERTIFIED TO MEET THE SPECIFIED EN 1433 LOAD CLASS. THE SYSTEM SHALL BE INSTALLED IN ACCORDANCE WITH THE MANUFACTURER'S INSTRUCTIONS AND RECOMMENDATIONS.

K3-C-ECP	K300 - KLASSIKDRAIN - LOAD CLASS: C Exposed Concrete Pavement	**ACO Polymer Products, Inc.** 825 W. Beechcraft St, Casa Grande, AZ 85122, Tel: 520-421-9866, Fax: 520-421-9899 P.O. Box 245, Chardon, OH 44024, Tel: 440-285-7000, Fax: 440-285-8517 4211 Pleasant Rd., Fort Mill, SC 29708, Tel: 800-543-4764, Fax: 803-802-1063
DATE: 03/21/13	INSTALLATION DRAWING - ACO DRAIN	

Arizona Tel: 888-490-9552 e-mail: sales@acousa.com Ohio Tel: 800-543-4764 www.acousa.com South Carolina Tel: 800-622-2377

TRENCH DRAIN DETAIL
NO SCALE

ACO Specification Information

ACO DRAIN
Type 878Q Longitudinal ductile iron grate (ADA)

Plan view



Side elevation

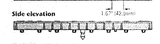

Description	Part No.	Length inches (mm)	Width inches (mm)	Weight lbs.
QuickLok grate Type 878Q Ductile iron longitudinal grate	93903	19.69 [500]	10.31 [262]	26.0
QuickLok locking bar	10452			0.3
QuickLok grate removal tool	01316			0.2

'QuickLok' locking mechanism

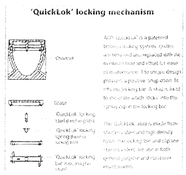

ACO Polymer Products, Inc.
Northeast Sales Office: P.O. Box 245, Chardon, OH 44024, Tel: (440) 285-7000, Toll free: (800) 543-4764, Fax: (440) 285-7005
West Sales Office: P.O. Box 10567, Casa Grande, AZ 85130, Tel: (520) 421-9866, Toll free: (888) 828-0567, Fax: (520) 421-9899
Southeast Sales Office: 4211 Pleasant Road, Fort Mill, SC 29708, Toll free: (800) 543-4764, Fax: (803) 802-1063
Follow us on
Electronic Contact:

SPEC 2 5 6

Apr 13/2

CHIMNEY DETAIL
NO SCALE

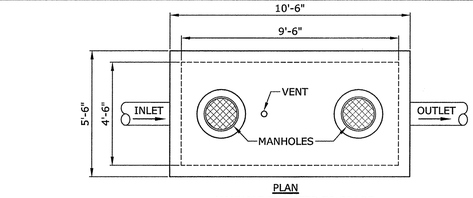

PLAN

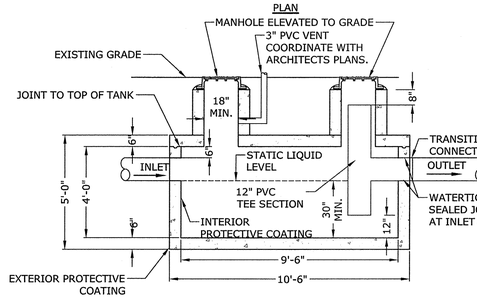

ELEVATION

NOTES:
1. CLEANOUT MANHOLES SHOULD BE ELEVATED TO GRADE WITH WATERTIGHT ACCESS COVERS.
2. HORIZONTAL JOINT SHALL BE ABOVE WATER LINE AT TOP OF TANK.
3. INTERIOR OF TANK SHALL BE COATED WITH AN EPOXY PETROLEUM RESISTANT SEALANT. EXTERIOR OF TANK SHALL BE COATED WITH A WATERPROOF SEALANT.
4. VOIDS BETWEEN INLET AND/OR OUTLET PIPING AND CONCRETE WALLS MUST BE FILLED WITH AN APPROVED WATERTIGHT, NON-SHRINKABLE GROUT MATERIAL, AND COATED WITH WATER GROUT SEALANT.
5. TANK MUST BE VENTED WITH A 3" PVC VENT ATTACHED TO BUILDING WALL TO EXTEND 8'-0" ABOVE FINISHED GRADE. INSTALL MUSHROOM CAP.
6. TANK SHALL BE DESIGNED FOR H20 LOADING.

1000 GALLON OIL/GRIT SEPARATOR
NO SCALE

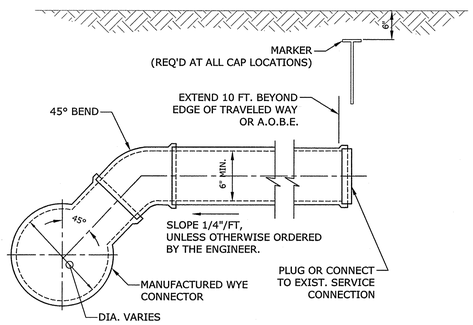

TYPICAL SECTION

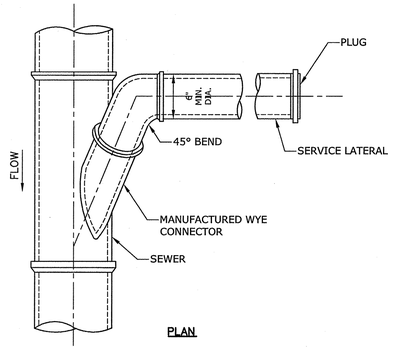

PLAN

STANDARD SERVICE LATERAL CONNECTION
NO SCALE

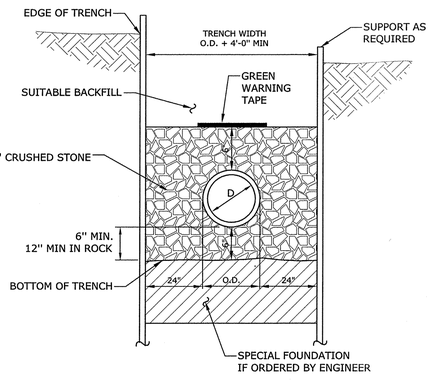

TYPICAL SANITARY SEWER TRENCH SECTION
NO SCALE

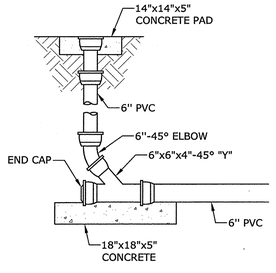

CLEAN-OUT DETAIL
NO SCALE

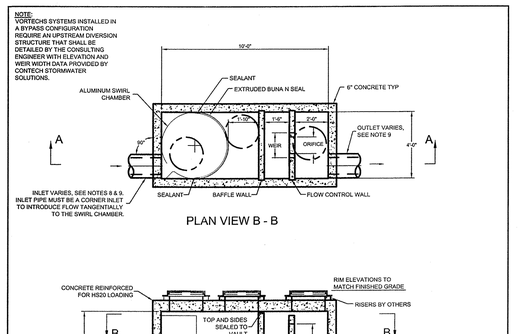

PLAN VIEW B - B

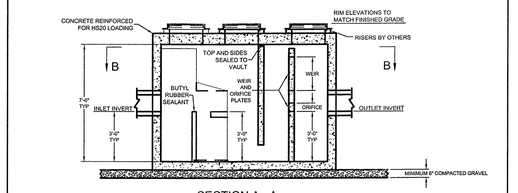

SECTION A - A

NOTES:
1. STORMWATER TREATMENT SYSTEM (SWTS) SHALL HAVE:
   PEAK TREATMENT CAPACITY: 2.5 CFS
   SEDIMENT STORAGE: 1.2 CU YD
   SEDIMENT CHAMBER DIA: 4' MIN
2. SWTS SHALL BE CONTAINED IN ONE RECTANGULAR STRUCTURE
3. SWTS REMOVAL EFFICIENCY SHALL BE DOCUMENTED BASED ON PARTICLE SIZE
4. SWTS SHALL RETAIN FLOATABLES AND TRAPPED SEDIMENT UP TO AND INCLUDING PEAK TREATMENT CAPACITY
5. SWTS INVERTS IN AND OUT ARE TYPICALLY AT THE SAME ELEVATION
6. SWTS SHALL NOT BE COMPROMISED BY EFFECTS OF DOWNSTREAM TAILWATER
7. SWTS SHALL HAVE NO INTERNAL COMPONENTS THAT OBSTRUCT MAINTENANCE ACCESS
8. INLET PIPE MUST BE PERPENDICULAR TO THE STRUCTURE
9. PIPE ORIENTATION MAY VARY; SEE SITE PLAN FOR SIZE AND LOCATION
10. PURCHASER SHALL NOT BE RESPONSIBLE FOR ASSEMBLY OF UNIT
11. MANHOLE FRAMES AND PERFORATED COVERS SUPPLIED WITH SYSTEM, NOT INSTALLED
12. PURCHASER TO PREPARE EXCAVATION AND PROVIDE CRANE FOR OFF-LOADING AND SETTING AT TIME OF DELIVERY
13. VORTECHS SYSTEMS BY CONTECH STORMWATER SOLUTIONS; PORTLAND, OR (800) 548-4667; SCARBOROUGH, ME (877) 897-6978; LINTHICUM, MD (866) 740-3318.

PROPRIETARY INFORMATION - NOT TO BE USED FOR CONSTRUCTION PURPOSES

This CADD file is for the purpose of specifying stormwater treatment equipment to be furnished by CONTECH Stormwater Solutions and may only be transferred to other documents exactly as provided by CONTECH Stormwater Solutions. Title block information, excluding the CONTECH Stormwater Solutions logo and the Vortechs Stormwater Treatment System designation and patent number, may be deleted if necessary. Revisions to any part of this CADD file without prior coordination with CONTECH Stormwater Solutions shall be considered unauthorized use of proprietary information.

CONTECH STORMWATER SOLUTIONS
contechstormwater.com

STANDARD DETAIL
STORMWATER TREATMENT SYSTEM
VORTECHS® MODEL 2000
U.S. PATENT No. 5,759,415

DATE: 10/4/06	SCALE: NONE	FILE NAME: STD2K	DRAWN: JBS	CHECKED: NDG

Washington Village Phase 1

20 Day Street Building B

Norwalk, CT

Trinity Washington Village Limited Partnership
&
the Norwalk Housing Authority

E-ICON ARCHITECTURE
101 SUMMER ST BOSTON MA 02110
617-451-3333 www.iconarch.com

CONSULTANT
Tighe&Bond www.tighebond.com
1000 Bridgeport Avenue
Suite 320
Shelton, CT 06484
(203) 712-1100

STAMP



MARK	DATE	DESCRIPTION
4	09-15-2014	PERMIT/ PRICING
3	06-13-2014	PRICING
2	11-18-2013	40% CHFA
1	09-19-2013	CAM/ SPECIAL PERMIT

PROJECT NO.: I0071
DRAWN BY: MDS
CHECKED BY: EWL

SHEET TITLE

STORM AND SANITARY DETAILS

C4.2

09/16/2014

Sep 16, 2014-9:08am Plotted By: Sansone,M
Tighe & Bond, Inc. J:\I0071 Washington Village\Drawing\Sheet\Building B\DS-B-I0071-01.dwg

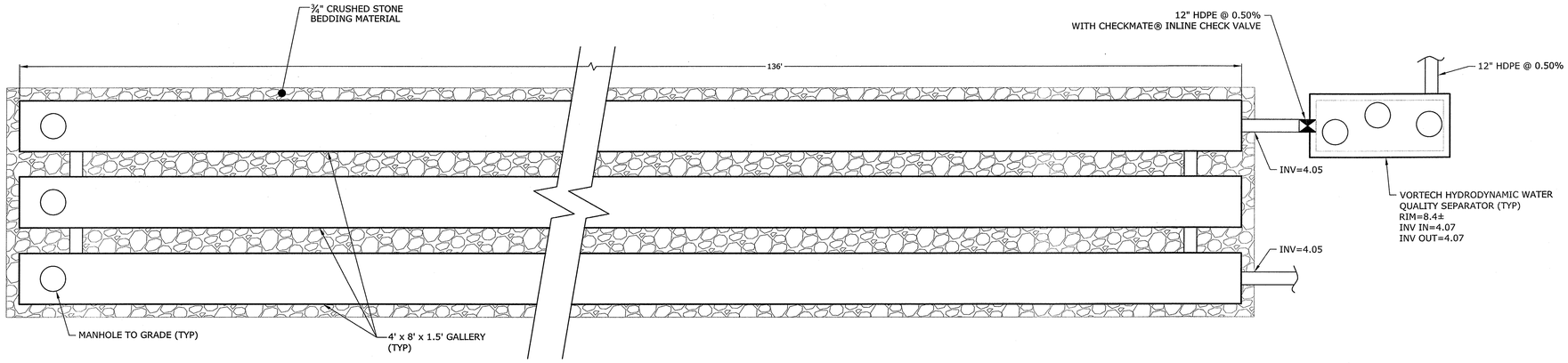

INFILTRATION SYSTEM DETAIL
SCALE: 1" = 5'

NOTES:

1. BASED ON THE TEST PIT REPORTS PREPARED BY THE PROJECT GEOTECHNICAL CONSULTANT, THERE MAY BE AREAS OF THE SITE THAT HAVE A LAYER OF UNSUITABLE MATERIAL IN THE AREA OF THE STORM DRAINAGE STRUCTURES, PIPING AND INFILTRATION SYSTEM. THESE UNSUITABLE MATERIALS MAY INCLUDE, BUT NOT LIMITED TO FILL CONSISTING OF BRICK, CONCRETE, ASPHALT, GLASS, PLASTIC, ASH AND CIDERS, WOOD, WOOD CHIPS, CERAMIC TILE AND ORGANICS. THESE UNSUITABLE MATERIALS SHALL BE REMOVED FROM THE SITE AND DISPOSED AT A SITE THAT IS LICENSED TO ACCEPT SUCH MATERIALS.
2. WHEN EXCAVATION TO THE VERTICAL LIMITS INDICATED ON THE DRAWINGS ENCOUNTERS UNSUITABLE UNDERLYING MATERIAL, THE CONTRACTOR IS TO REMOVE THE UNSUITABLE MATERIAL AND BACKFILL WITH APPROVED MATERIAL. THE VERTICAL LIMIT OF THIS REMOVAL SHALL BE BELOW THE STORM DRAINAGE STRUCTURES, PIPING AND INFILTRATION SYSTEM TO THE UNDERLYING GLACIAL OUTWASH AS IDENTIFIED BY THE PROJECT GEOTECHNICAL CONSULTANT.
3. WHEN EXCAVATION TO THE HORIZONTAL LIMITS INDICATED ON THE DRAWINGS ENCOUNTERS UNSUITABLE MATERIAL, THE CONTRACTOR IS TO REMOVE THE UNSUITABLE MATERIAL AND BACKFILL WITH APPROVED MATERIAL. THE HORIZONTAL LIMIT OF THIS REMOVAL SHALL BE BELOW AT LEAST 2 (TWO) FEET BEYOND THE STORM DRAINAGE STRUCTURES AND PIPING AND AT LEAST 5 (FIVE) FEET BEYOND THE ¾" STONE ENVELOPE SURROUNDING THE INFILTRATION SYSTEM.

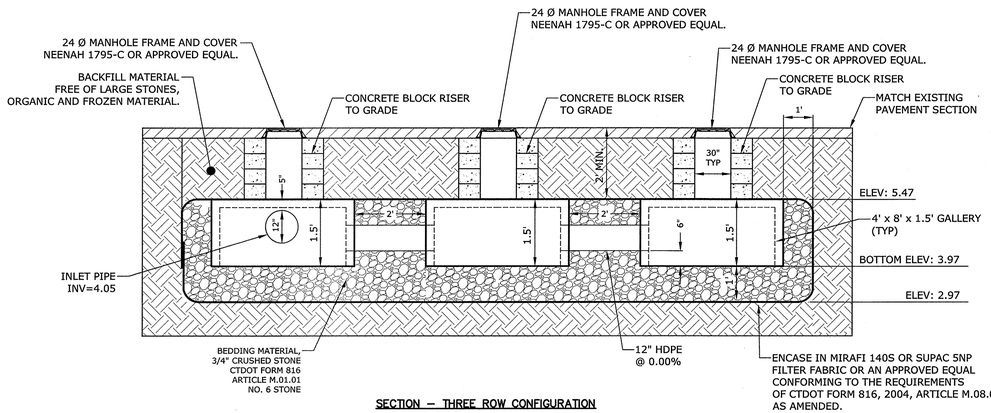

SECTION – THREE ROW CONFIGURATION

SPECIFICATIONS:
1. GALLERY TO BE 4'x8'x1.5' GALLERY BY CONNECTICUT PRECAST CORP., MONROE, CONNECTICUT, OR APPROVED EQUAL.
2. CONCRETE 4000 PSI MINIMUM STRENGTH AT 28 DAYS.
3. STEEL REINFORCEMENT ASTM A-615, GRADE 60.
4. DESIGN LOADING MUST MEET AASHTO HS20-44.

4 'x 8' x 1.5' PRECAST GALLEY
NO SCALE

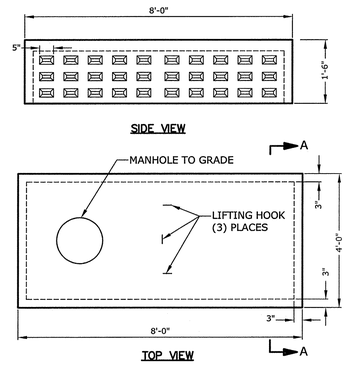

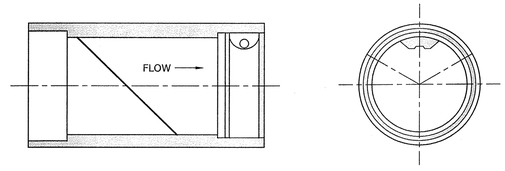

CHECKMATE VALVE								
NOMINAL PIPE SIZE I.D.*		OVERALL LENGTH*		NUMBER OF CLAMPS	CUFF DEPTH		BACK PRESSURE RATING	
Inches	Millimeters	Inches	Millimeters		Inches	Millimeters	Feet	Meters
12	300	23	584	1	2	51	40	12

CHECKMATE® IN LINE CHECK VALVE DETAIL
NO SCALE

Washington Village Phase 1

20 Day Street Building B

Norwalk, CT

Trinity Washington Village Limited Partnership
&
the Norwalk Housing Authority

E-ICON ARCHITECTURE
101 SUMMER ST BOSTON MA 02110
617-451-3333 www.iconarch.com

CONSULTANT
Tighe&Bond
www.tighebond.com
1000 Bridgeport Avenue
Suite 320
Shelton, CT 06484
(203) 712-1100

STAMP

STATE OF CONNECTICUT ALFRED J. MASCIA, JR. 12691 LICENSED PROFESSIONAL ENGINEER 9-16-14

STATE OF CONNECTICUT JOHN W. BLOOM 8488 LICENSED PROFESSIONAL ENGINEER 9/16/14

MARK	DATE	DESCRIPTION
4	09-15-2014	PERMIT/ PRICING
3	06-13-2014	PRICING
2	11-18-2013	40% CHFA
1	09-19-2013	CAM/ SPECIAL PERMIT

PROJECT NO.: I0071
DRAWN BY: MDS
CHECKED BY: EWL

SHEET TITLE

INFILTRATION SYSTEM DETAILS

C4.3

09/16/2014

Sep 16, 2014-9:08am Plotted By: SansoneM
Tighe & Bond, Inc. J:\I0071 Washington Village\Drawing\Sheet\Building B\DS-B-I0071-01.dwg

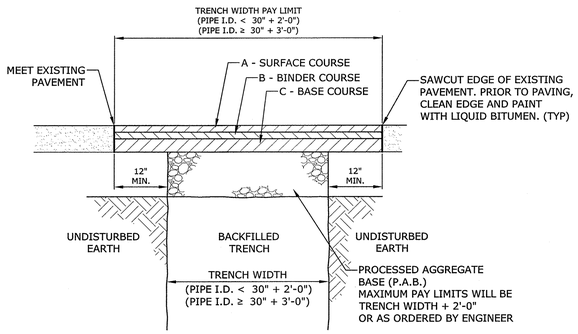

	A	B	C	D
	CL 2	CL 1	CL 4	P.A.B.
MAJOR ARTERIAL	2"	2"	6"	14"
MINOR ARTERIAL	1½"	2"	3"	12"
COLLECTOR	1½"	1½"	3"	10"
LOCAL	1½"	1½"	—	8"

PAVEMENT REPAIR
(CITY OF NORWALK)
NO SCALE

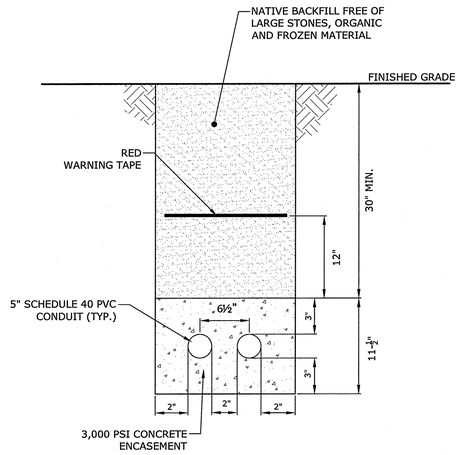

ELECTRICAL
CONDUIT BANK DETAIL
NO SCALE

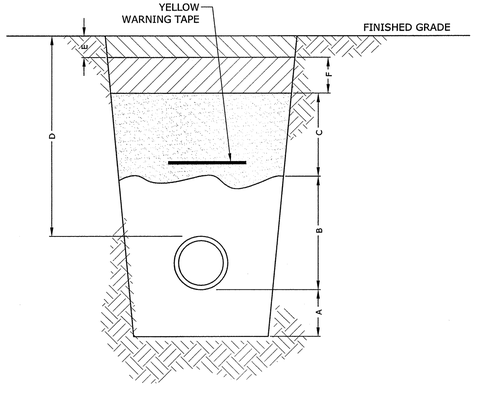

ITEM	DEPTH NORMAL	DEPTH ROCK
A - SAND PADDING	4"*	6"
B - SAND PADDING AS BACKFILL	6" OVER PIPE	6" OVER PIPE
C - REPLACEMENT FILL / SUITABLE BACKFILL	AS REQUIRED	AS REQUIRED
D - COVER	36"*	24"
E - ROAD REPAIR	AS REQUIRED	AS REQUIRED
F - PROCESSED AGGREGATE	AS REQUIRED	AS REQUIRED

*MAY BE LESS DUE TO CONDITIONS (SEE NOTE)

NOTES:
1. EACH BURIED MAIN SHOULD BE INSTALL WITH 36" COVER TO INSUREADEQUATE COVER FOR SERVICE TEES, VALVES, AND OTHER FITTINGS THAT MAY BE ADDED AT A FUTURE DATE.

2. ADDITIONAL COVER SHOULD BE PROVIDED WHERE THE POTENTIAL FOR DAMAGE BY OUTSIDE FORCES IS GREATER THAN NORMAL. CONSIDERATION SHOULD BE GIVEN TO THE FOLLOWING:
   A. DRAINAGE DITCH CROSSINGS
   B. OTHER UTILITY CROSSINGS
   C. LOCATIONS WHERE EROSION DUE TO WATER OR VEHICULAR ACTIVITY MAY AFFECT THE GRADE
   D. STREET LOCATIONS WHERE FUTURE STREET WORK IS A POSSIBILITY
   E. REQUIREMENTS OF OTHER REGULATORY AGENCIES

3. EACH BURIED MAIN MUST BE INSTALLED WITH A MINIMUM OF 24" COVER. WHERE AN UNDERGROUND STRUCTURE PREVENTS THEINSTALLATION OF THE MAIN WITH THE MINIMUM COVER, THE MAIN MAY BE INSTALLED WITH LESS COVER IF IT IS PROVIDED ADDITIONAL PROTECTION SUCH AS CASINGS TO WITHSTAND ANTICIPATED EXTERNAL LOADS.

YANKEEGAS GAS MAIN
TRENCH BEDDING DETAIL
NO SCALE

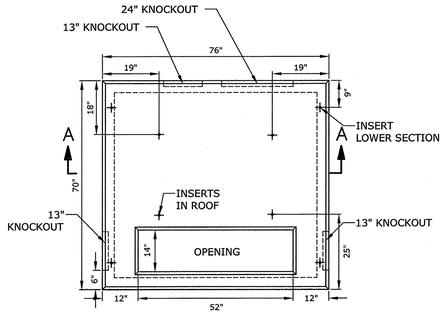

PLAN

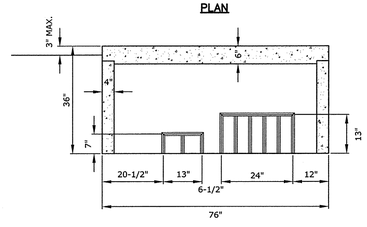

SECTION A–A

NOTE: PAD TO MEET ALL SNEW SPECIFICATIONS.

PRECAST THREE PHASE
TRANSFORMER PAD
NO SCALE

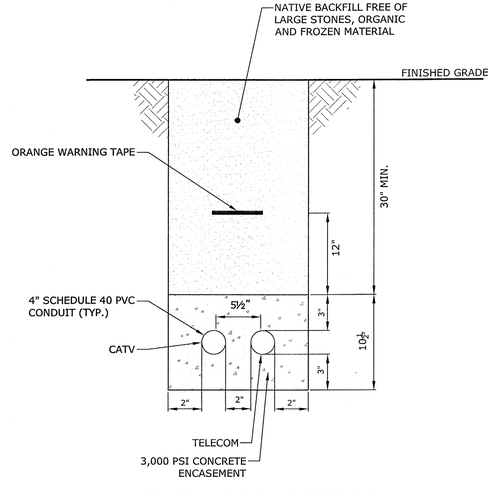

NOTE: MINIMUM CONDUIT RADIUS TO BE 15'-0"

TELECOM/CATV
CONDUIT BANK DETAIL
NO SCALE

Washington Village Phase 1

20 Day Street Building B

Norwalk, CT

Trinity Washington Village Limited Partnership
&
the Norwalk Housing Authority

E-ICON ARCHITECTURE
101 SUMMER ST BOSTON MA 02110
617-451-3333 www.iconarch.com

CONSULTANT

Tighe&Bond
www.tighebond.com
1000 Bridgeport Avenue
Suite 320
Shelton, CT 06484
(203) 712-1100

STAMP

STATE OF CONNECTICUT ALFRED J. MASCIA, JR. 12926 LICENSED PROFESSIONAL ENGINEER 9-16-14

STATE OF CONNECTICUT JOHN W. BLOCH 8488 LICENSED PROFESSIONAL ENGINEER 9/16/14

MARK	DATE	DESCRIPTION
4	09-15-2014	PERMIT/ PRICING
3	06-13-2014	PRICING
2	11-18-2013	40% CHFA
1	09-19-2013	CAM/ SPECIAL PERMIT

PROJECT NO.: I0071
DRAWN BY: MDS
CHECKED BY: EWL

SHEET TITLE

UTILITY DETAILS

C4.4

09/16/2014

Sep 16, 2014-9:08am Plotted By: Sansone
Tighe & Bond, Inc. J:\I0071 Washington Village\Drawing\Sheet\Building B\DS-B-I0071-01.dwg

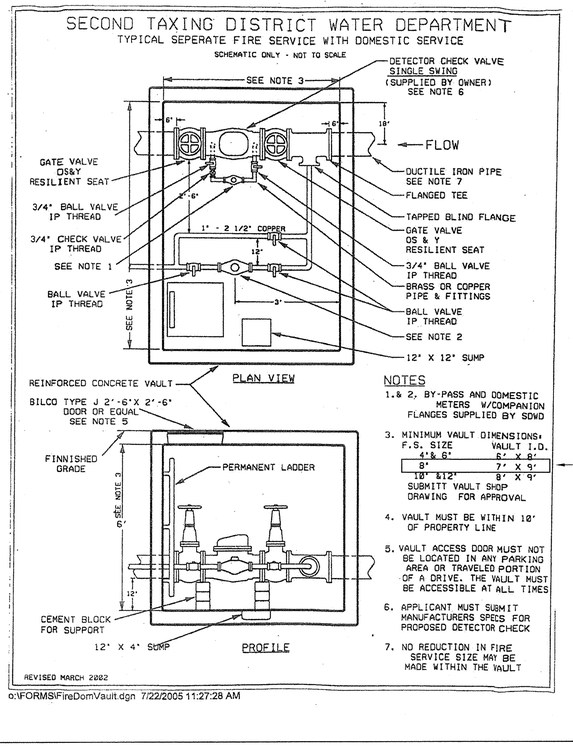

WATER METER VAULT
NO SCALE

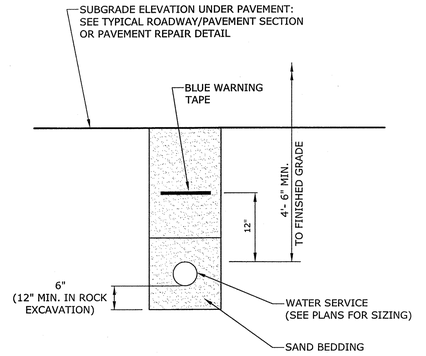

NOTES:
1. SAND BEDDING MATERIAL TO BE PLACED A MINIMUM OF 1'- 0" OVER THE TOP OF WATER SERVICE.
2. BEDDING MATERIAL TO BE PLACED ON UNDISTURBED FOUNDATION.
3. REMOVE ANY UNSUITABLE FOUNDATION MATERIAL AND REPLACE WITH COMPACTED BEDDING MATERIAL.
4. ALL WATER SERVICE INSTALLATIONS TO CONFORM TO SECOND TAXING DISTRICT WATER DEPARTMENT REQUIREMENTS.

WATER SERVICE TRENCH
NO SCALE

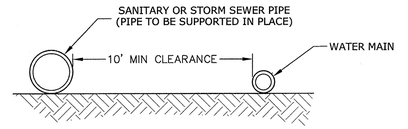

PARALLEL TO WATER MAIN

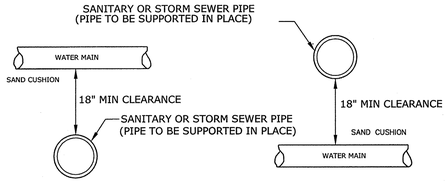

CROSSING UNDER WATER MAIN CROSSING OVER WATER MAIN

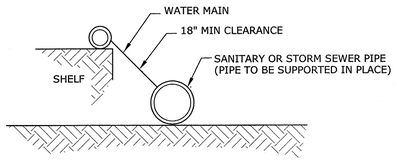

CROSSING WATER MAIN

1. IF THE SANITARY SEWER CROSSES LESS THAN 18" ABOVE OR UNDER THE WATER MAIN, THE SANITARY SEWER MUST BE ENCASED IN CONCRETE TO A DISTANCE OF 10 FEET (10') ON BOTH SIDES OF THE WATER MAIN OR BE APPROVED TIGHT JOINTED PIPE AS PER THE STATE OF CONNECTICUT D.O.H.S

PARALLEL TO WATER MAIN

2. IF THE SANITARY SEWER IS WITHIN 10 HORIZONTAL FEET (10') OF THE WATER MAIN AND EITHER ABOVE THE WATER MAIN INVERT OR LESS THAN 18 INCHES (18") UNDER THE WATER MAIN, THE SANITARY SEWER MUST BE ENCASED IN CONCRETE OR BE APPROVED TIGHT JOINTED PIPE AS PER THE STATE OR CONNECTICUT D.O.H.S

SEWER PIPE CROSSING DETAIL
NO SCALE

NOTE:
DIMENSIONS ARE CONTROLLED BY DIAMETER OF BRANCH MAIN

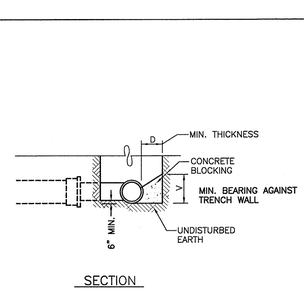

SECTION

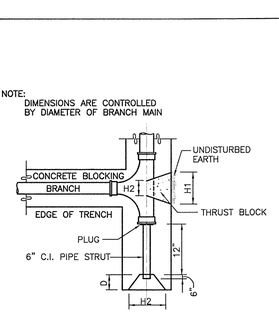

VERTICAL BENDS

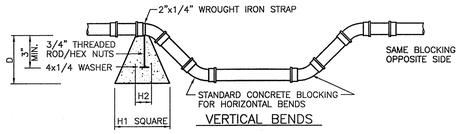

VERTICAL BENDS

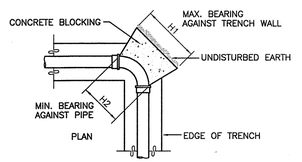

HORIZONTAL BENDS

CONCRETE THRUST BLOCKING
NO SCALE

TABLE OF DIMENSIONS FOR CONCRETE BLOCKING

PIPE SIZE (H)	TEES, CROSSES & PLUGS					90° BENDS					45° BENDS					22 1/2° BENDS					11 1/4° BENDS				
	H1	H2	V	D	CU. FT.	H1	H2	V	D	CU. FT.	H1	H2	V	D	CU. FT.	H1	H2	V	D	CU. FT.	H1	H2	V	D	CU. FT.
6"Ø	24"	16"	18"	18"	3.50	30"	16"	18"	18"	4.05	24"	10"	16"	18"	3.20	24"	10"	16"	18"	3.20	24"	10"	16"	18"	3.20
8"Ø	36"	18"	18"	18"	5.05	39"	18"	24"	18"	7.30	30"	11"	18"	18"	3.95	24"	11"	18"	18"	3.45	24"	11"	16"	18"	3.40
12"Ø	54"	30"	24"	24"	13.4	54"	32"	36"	24"	18.15	42"	18"	24"	24"	9.60	24"	18"	24"	24"	6.60	24"	18"	21"	24"	6.10

Washington Village Phase 1

20 Day Street Building B

Norwalk, CT

Trinity Washington Village Limited Partnership
&
the Norwalk Housing Authority

E-ICON ARCHITECTURE
101 SUMMER ST BOSTON MA 02110
617-451-3333 www.iconarch.com

CONSULTANT
Tighe&Bond
www.tighebond.com
1000 Bridgeport Avenue
Suite 320
Shelton, CT 06484
(203) 712-1100

STAMP

STATE OF CONNECTICUT ALFRED J. MASCIA, JR. 12620 LICENSED PROFESSIONAL ENGINEER 9-15-14

STATE OF CONNECTICUT JOHN W. BLOCK 24488 LICENSED PROFESSIONAL ENGINEER 9/16/14

MARK	DATE	DESCRIPTION
4	09-15-2014	PERMIT/ PRICING
3	06-13-2014	PRICING
2	11-18-2013	40% CHFA
1	09-19-2013	CAM/ SPECIAL PERMIT

PROJECT NO.: I0071
DRAWN BY: MDS
CHECKED BY: EWL

SHEET TITLE

WATER SERVICE DETAILS

C4.5

09/16/2014

Sep 16, 2014-9:08am Plotted By: SansoneM
Tighe & Bond, Inc. J:\I10071 Washington Village\Drawing\Sheet\Building B\DS-B-I0071-01.dwg

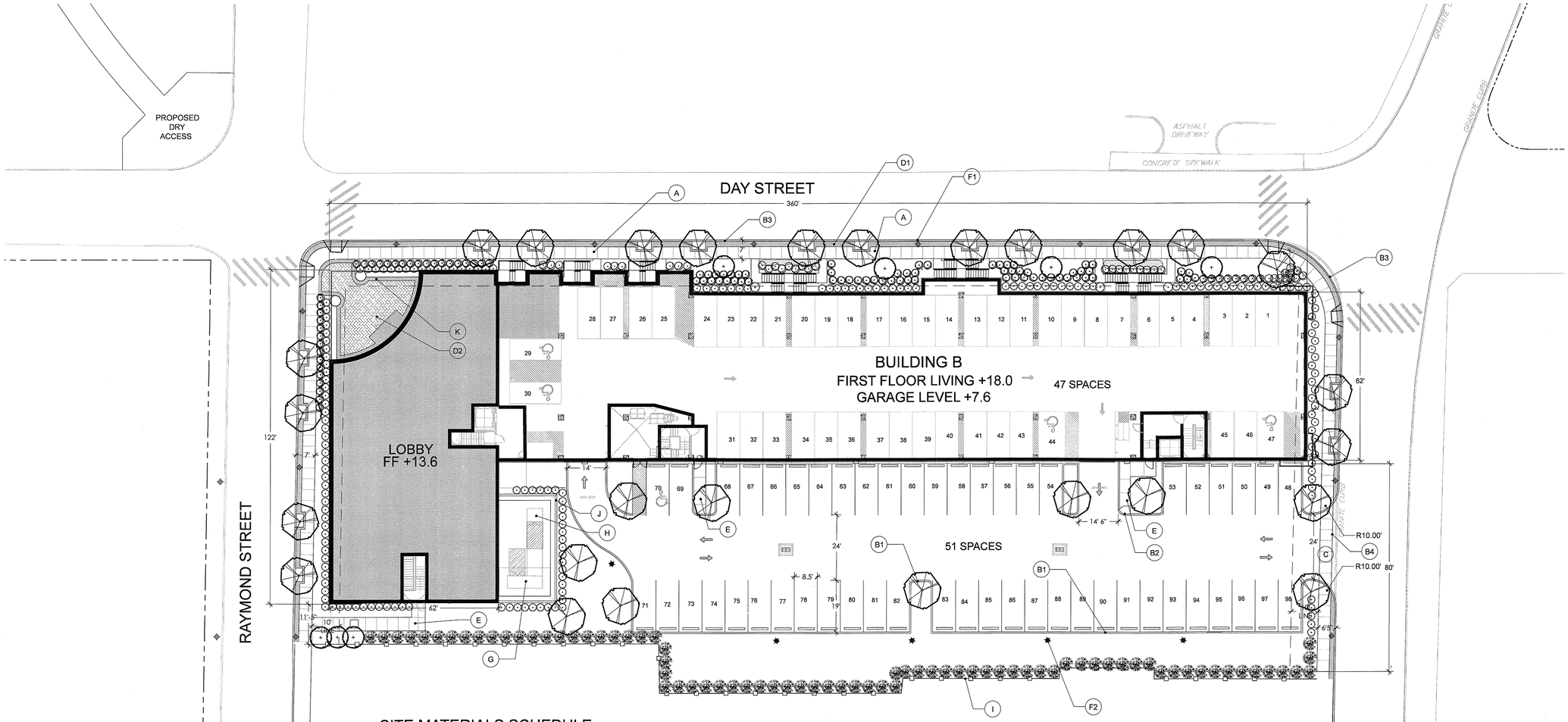

SITE MATERIALS SCHEDULE

SYM	ITEM
A	CONCRETE SIDEWALK - CITY OF NORWALK DPW STANDARD DETAILS
B	CURB
B1	CONCRETE CURB
B2	FLUSH CONCRETE CURB
B3	GRANITE CURB: WHITE MOUNT AIRY GRANITE: BY: NORTH CAROLINA GRANITE COMPANY. TEL:336-786-5141
B4	FLUSH GRANITE CURB: WHITE MOUNT AIRY GRANITE: BY: NORTH CAROLINA GRANITE COMPANY. TEL:336-786-5141
C	TYPE 'A' CONCRETE DRIVE APRON. CITY OF NORWALK DPW STANDARD DETAILS
D	PAVER
D1	BRICK PAVER: MODEL:NEW HOLLAND. COLOR: RE HOLLAND. SIZE:4"x8".MADE BY: UNILOCK. CONTACT: SEAN O'LEARY. TEL: 845-230-4530
D2	PATIO PAVER: MODEL:NEW HOLLAND. COLOR: RE HOLLAND. SIZE:4"x8".MADE BY: UNILOCK. CONTACT: SEAN O'LEARY. TEL: 845-230-4530
E	CONCRETE WALK
F	SITE LIGHTING
F1	STREET POLE LIGHT
F2	PARKING POLE LIGHT
G	GENERATOR
H	TRANSFORMER
I	BLACK VINYL COATED FENCE
J	MODULAR BLOCK RETAINING WALL SEE ARCHITECTURAL DRAWINGS
K	SKATEBOARD PROOF SEAT WALL

GENERAL NOTE:
THE EXCAVATION, HANDLING, AND MANAGEMENT OF ALL SITE SOILS, INCLUDING THE ON-SITE REUSE OF EXISTING SITE SOILS TO THE FULLEST EXTENT FEASIBLE, SHALL BE PERFORMED IN ACCORDANCE WITH THE EARTHWORK SPECIFICATION SECTION 02300 AND THE SOIL MANAGEMENT PLAN PREPARED FOR USE ON THIS PROJECT, PURSUANT TO THE STATE OF CONNECTICUT REMEDIATION STANDARD REGULATIONS (RSRS). LAWN/LANDSCAPED AREAS OF THE SITE NOT COVERED BY THE PROPOSED BUILDINGS, CONCRETE OR PAVEMENT SHALL BE COVERED BY A GEOTEXTILE MARKER BARRIER AND A MINIMUM 4-FOOT SURFICIAL THICKNESS OF "CLEAN" SOIL, MEETING THE CT RSRS, AT FINISHED GRADE.

GRAPHIC SCALE
20 0 10 20 40 80
(IN FEET)
1 inch = 20 ft.

Washington Village Phase 1

20 Day Street Building B

Norwalk, CT

Trinity Washington Village Limited Partnership
&
the Norwalk Housing Authority

E-ICON ARCHITECTURE
101 SUMMER ST BOSTON MA 02110
617-451-3333 www.iconarch.com

CONSULTANT

erla eric rains landscape architecture, llc
33 N Water Street Norwalk, CT 203.853.7600 www.ericrains.com

STAMP



KEY PLAN

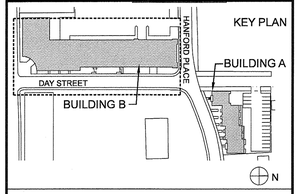

MARK	DATE	DESCRIPTION
4	09.15.2014	PERMIT/PRICING
3	06.13.2014	PRICING
2	11.18.2013	40% CHFACD SET
1	09.19.2013	CAM/SPECIAL PERMIT

PROJECT NO.: 21222
DRAWN BY:
CHECKED BY:

SHEET TITLE

SITE PLAN

L-1.0

Tue Sep 16 15:58:58 2014

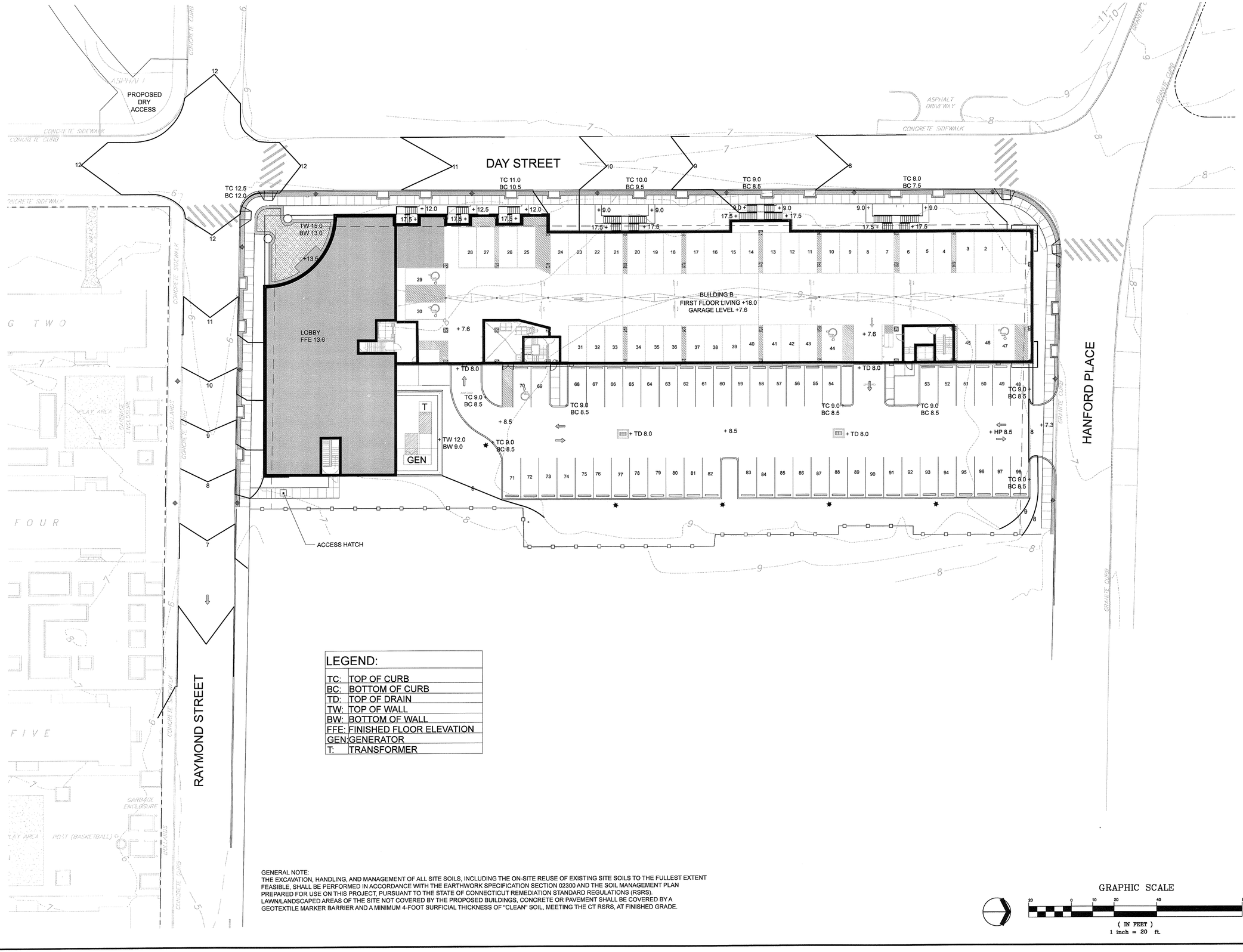

LEGEND:	
TC:	TOP OF CURB
BC:	BOTTOM OF CURB
TD:	TOP OF DRAIN
TW:	TOP OF WALL
BW:	BOTTOM OF WALL
FFE:	FINISHED FLOOR ELEVATION
GEN:	GENERATOR
T:	TRANSFORMER

GENERAL NOTE:
THE EXCAVATION, HANDLING, AND MANAGEMENT OF ALL SITE SOILS, INCLUDING THE ON-SITE REUSE OF EXISTING SITE SOILS TO THE FULLEST EXTENT FEASIBLE, SHALL BE PERFORMED IN ACCORDANCE WITH THE EARTHWORK SPECIFICATION SECTION 02300 AND THE SOIL MANAGEMENT PLAN PREPARED FOR USE ON THIS PROJECT, PURSUANT TO THE STATE OF CONNECTICUT REMEDIATION STANDARD REGULATIONS (RSRS). LAWN/LANDSCAPED AREAS OF THE SITE NOT COVERED BY THE PROPOSED BUILDINGS, CONCRETE OR PAVEMENT SHALL BE COVERED BY A GEOTEXTILE MARKER BARRIER AND A MINIMUM 4-FOOT SURFICIAL THICKNESS OF "CLEAN" SOIL, MEETING THE CT RSRS, AT FINISHED GRADE.

GRAPHIC SCALE

20 0 10 20 40 80

(IN FEET)
1 inch = 20 ft.

Washington Village Phase 1

20 Day Street Building B

Norwalk, CT

Trinity Washington Village Limited Partnership
&
the Norwalk Housing Authority

E-ICON ARCHITECTURE
101 SUMMER ST BOSTON MA 02110
617-451-3333 www.iconarch.com

CONSULTANT
erla eric rains landscape architecture, llc
33 N Water Street Norwalk, CT 203.853.7000 www.ericrains.com

STAMP



KEY PLAN

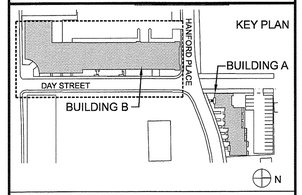

MARK	DATE	DESCRIPTION
4	09.15.2014	PERMIT/PRICING
3	06.13.2014	PRICING
2	11.18.2013	40% CHFACD SET
1	09.19.2013	CAM/SPECIAL PERMIT

PROJECT NO.: 21222
DRAWN BY:
CHECKED BY:

SHEET TITLE

GRADING PLAN

L-2.0

True Map 16 15:37:24 2014

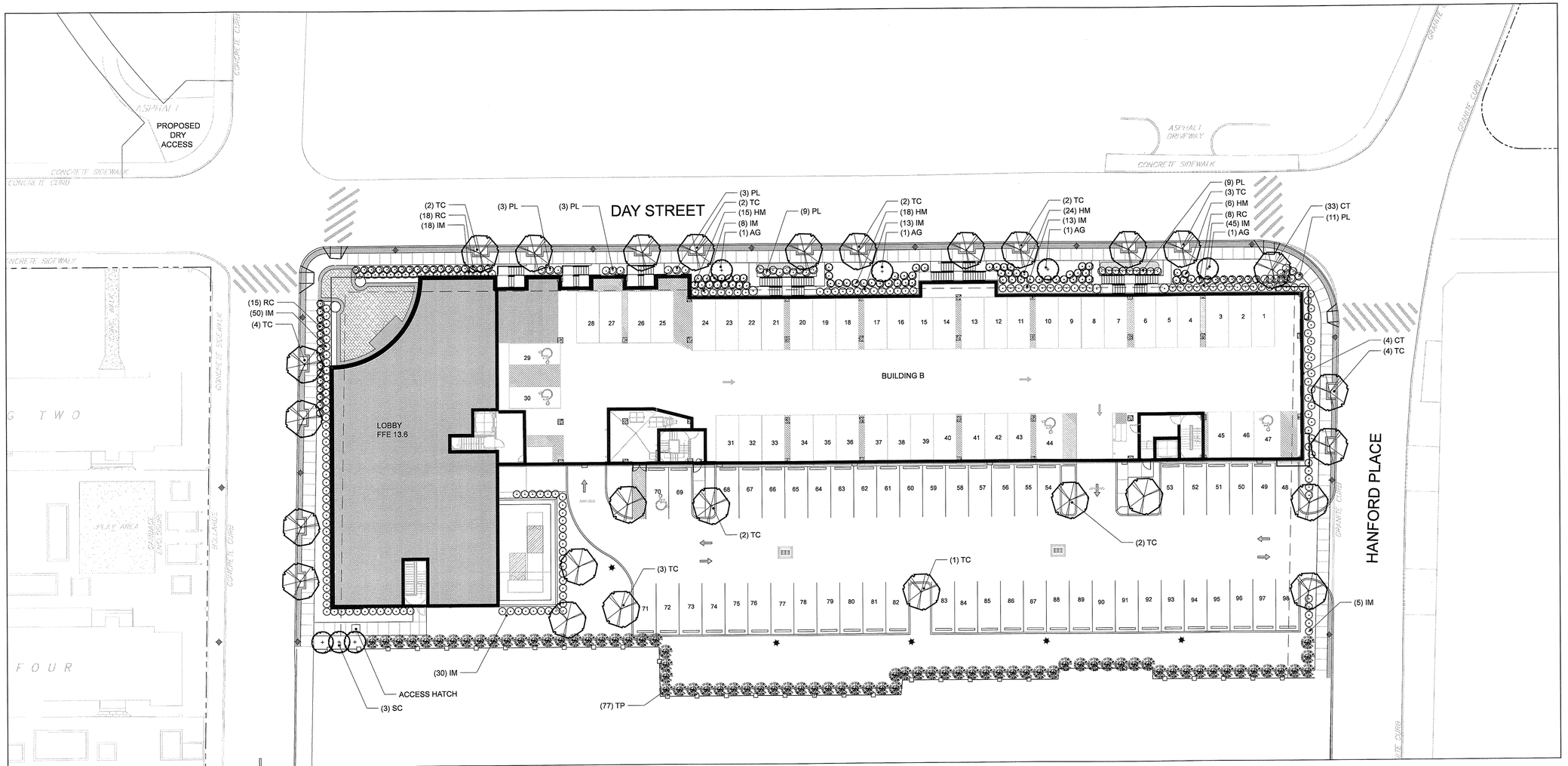

PLANT LIST

SYM	QTY	BOTANICAL NAME	COMMON NAME	ROOT	SIZE	COMMENTS
TREES						
AG	4	Acer ginnala	AMUR MAPLE	B&B	2 1/2" - 3" cal.	Full, Nicely Shaped
SC	3	Syringa x chinensis 'Saugeana'	SAUGEANA CHINESE LILAC	B&B	2 1/2" - 3" cal.	Full, Nicely Shaped, 6' clear to ground
TP	77	Thuja plicata 'Green Giant'	GREEN GIANT ARBORVITAE	B&B	6'-8' HT.	Full, Nicely Shaped
TC	22	Tilla Cordata	LITTLE LEAF LINDEN	B&B	3" - 3 1/2" cal.	Full, Nicely Shaped, 6' clear to ground
SHRUBS						
HM	53	Hydrangea macrophylla 'Endless Summer'	ENDLESS SUMMER HYDRANGEA	Cont.	24"- 30" HT.	Specimen, 30" Spacing O.C.
IM	182	Illex x meserveae 'Blue Princess'	BLUE PRINCESS HOLLY	B&B	30"- 36" HT.	Specimen, 36" Spacing O.C.
PL	38	Prunus laurocerasus 'Otto Luyken'	OTTO LUYKEN CHERRY LAUREL	Cont.	18"-24" HT.	Specimen, 24" Spacing O.C.
RC	41	Rosa 'Meipitac' carefree wonder	CAREFREE WONDER ROSE	Cont.	24"-30" HT.	Specimen, 30" Spacing O.C.
GROUNDCOVERS						
LM	60	Liriope muscari 'Big Blue'	BIG BLUE LILY TURF	Cont.	1 PINT	12-15" Spacing O.C.
VINES						
CT	37	Clematis terniflora	Sweet Autumn Clematis	Cont.	5 Gal.	Full, 6' min runners

SOIL CHART

POSTCONSTRUCTION SOIL CONDITION	TYPE OF PREPARATION
GOOD SOIL	LOOSEN EXISTING SOIL
COMPACTED SOIL	LOOSEN EXISTING SOIL, ADD COMPOSTED ORGANIC MATTER TO BRING ORGANIC CONTENT TO 5% DRY WEIGHT
CLAY CONTENT 5-35%	LOOSEN EXISTING SOIL, ADD ORGANIC MATTER TO BRING ORGANIC CONTENT TO 5% DRY WEIGHT
SANDY LOAM SOILS	ADD CLEAN COMPOSTED ORGANIC MATERIAL (20% MAX. BY VOLUME) TO THE EXISTING SOIL.
POOR QUALITY, HEAVY CLAY SOIL	REMOVE EXISTING SOIL, ADD LOAM TOPSOIL

GENERAL NOTE:
THE EXCAVATION, HANDLING, AND MANAGEMENT OF ALL SITE SOILS, INCLUDING THE ON-SITE REUSE OF EXISTING SITE SOILS TO THE FULLEST EXTENT FEASIBLE, SHALL BE PERFORMED IN ACCORDANCE WITH THE EARTHWORK SPECIFICATION SECTION 02300 AND THE SOIL MANAGEMENT PLAN PREPARED FOR USE ON THIS PROJECT, PURSUANT TO THE STATE OF CONNECTICUT REMEDIATION STANDARD REGULATIONS (RSRS). LAWN/LANDSCAPED AREAS OF THE SITE NOT COVERED BY THE PROPOSED BUILDINGS, CONCRETE OR PAVEMENT SHALL BE COVERED BY A GEOTEXTILE MARKER BARRIER AND A MINIMUM 4-FOOT SURFICIAL THICKNESS OF "CLEAN" SOIL, MEETING THE CT RSRS, AT FINISHED GRADE.

PLANTING NOTES

1) EACH TREE MUST BE PLANTED SUCH THAT THE TRUNK FLARE IS VISIBLE AT THE TOP OF THE ROOT BALL. TREES WHERE THE TRUNK FLARE IS NOT VISIBLE SHALL BE REJECTED. DO NOT COVER THE TOP OF THE ROOT BALL WITH SOIL.

2) DO NOT HEAVILY PRUNE THE TREE AT PLANTING. PRUNE ONLY CROSSOVER LIMBS, CO-DOMINANT LEADERS, AND BROKEN OR DEAD BRANCHES. SOME INTERIOR TWIGS AND LATERAL BRANCHES MAY BE PRUNED; HOWEVER, DO NOT REMOVE THE TERMINAL BUDS OF BRANCHES THAT EXTEND TO THE EDGE OF THE CROWN.

3) STAKE TREE BASED ON CRITERIA BELOW OR AS REQUESTED BY THE LANDSCAPE ARCHITECT.

4) WRAP TREE TRUNKS ONLY UPON THE APPROVAL OF THE LANDSCAPE ARCHITECT.

5) BACK FILL WITH SOIL EXCAVATED TO MAKE HOLE. SEE SOIL CHART FOR SOIL AMENDMENTS.

6) DO NOT PLACE MULCH IN CONTACT WITH TREE TRUNK. MAINTAIN THE MULCH FREE OF WEEDS.

7) ALL PLANT MATERIAL SHALL BE INSPECTED FOR DEFECTS AND OR DAMAGE BEFORE PLANTING. SUBSTANDARD PLANTS SHALL BE RETURNED AND REPLACED BY THE CONTRACTOR. ACCEPTABLE PLANTS ARE TO BE PLANTED PER THE SPECIFICATIONS OF THE PLANT.

8) ALL PLANTINGS OPERATIONS SHALL BE PERFORMED AND COMPLETED BETWEEN OCTOBER 1 AND THE DATE AT WHICH FROZEN SOIL CONDITIONS EXIST, AND/OR FROM APRIL 15 TO JUNE 15.

9) ALL PLANT MATERIAL IS TO HAVE A ONE YEAR WARRANTEE THAT WILL INCLUDE ALL MATERIALS AND LABOR. REPLACEMENT OPERATIONS SHALL OCCUR DURING THE APPROPRIATE GROWING SEASON AND SHALL INCLUDE ALL MATERIAL THAT HAS LOST UP TO 25% OF ITS AREA OR MASS.

10) THE ACCEPTABILITY OF THE PLANT MATERIAL FURNISHED AND PLANTED SHALL BE DETERMINED AT THE END OF THE FIRST FULL GROWING SEASON. SHOULD THE INSTALLING CONTRACTOR NOT BE THE MAINTENANCE CONTRACTOR, THE INSTALLING CONTRACTOR SHALL, AS NECESSARY, INFORM THE OWNER OF ANY CONDITIONS THAT ARE CAUSING THE INSTALLED PLANT MATERIAL TO SUFFER OR DECLINE.

11) AT THE END OF ONE FULL GROWING SEASON, AN INSPECTION TO DETERMINE THE ACCEPTABILITY OF PLANT ESTABLISHMENT WILL BE HELD BY THE CONTRACTOR AND OWNER NO LATER THAN OCTOBER 1. AT THE END OF ONE YEAR, CONTRACTOR SHALL REPLACE ALL DEAD SHRUBS AND PLANTINGS AND PERFORM ANY NECESSARY CORRECTIVE ACTION.

12) REFER TO CIVIL DRAWINGS AND DETAILS FOR INFORMATION AND SITE GRADING/UTILITY COORDINATION.

13) ALL PLANT MATERIAL TO MEET THE STANDARDS ESTABLISHED BY THE AMERICAN NURSERY AND LANDSCAPE ASSOCIATION. SPECIFICALLY THE AMERICAN STANDARD FOR NURSERY STOCK ANSI-Z60.1-2004.

GRAPHIC SCALE

20 0 10 20 40 80

(IN FEET)
1 inch = 20 ft.

Washington Village Phase 1

20 Day Street Building B

Norwalk, CT

Trinity Washington Village Limited Partnership
&
the Norwalk Housing Authority

E-ICON ARCHITECTURE
101 SUMMER ST BOSTON MA 02110
617-451-3333 www.iconarch.com

CONSULTANT
erla eric rains landscape architecture, llc
33 N Water Street Suite, CT 203.853.7666 www.ericrains.com

STAMP



KEY PLAN

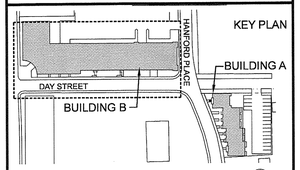

MARK	DATE	DESCRIPTION
4	09.15.2014	PERMIT/PRICING
3	06.13.2014	PRICING
2	11.18.2013	40% CHFACD SET
1	09.19.2013	CAM/SPECIAL PERMIT

PROJECT NO.: 21222
DRAWN BY:
CHECKED BY:

SHEET TITLE

PLANTING PLAN

L-3.0

Tue Sep 16 15:58:30 2014

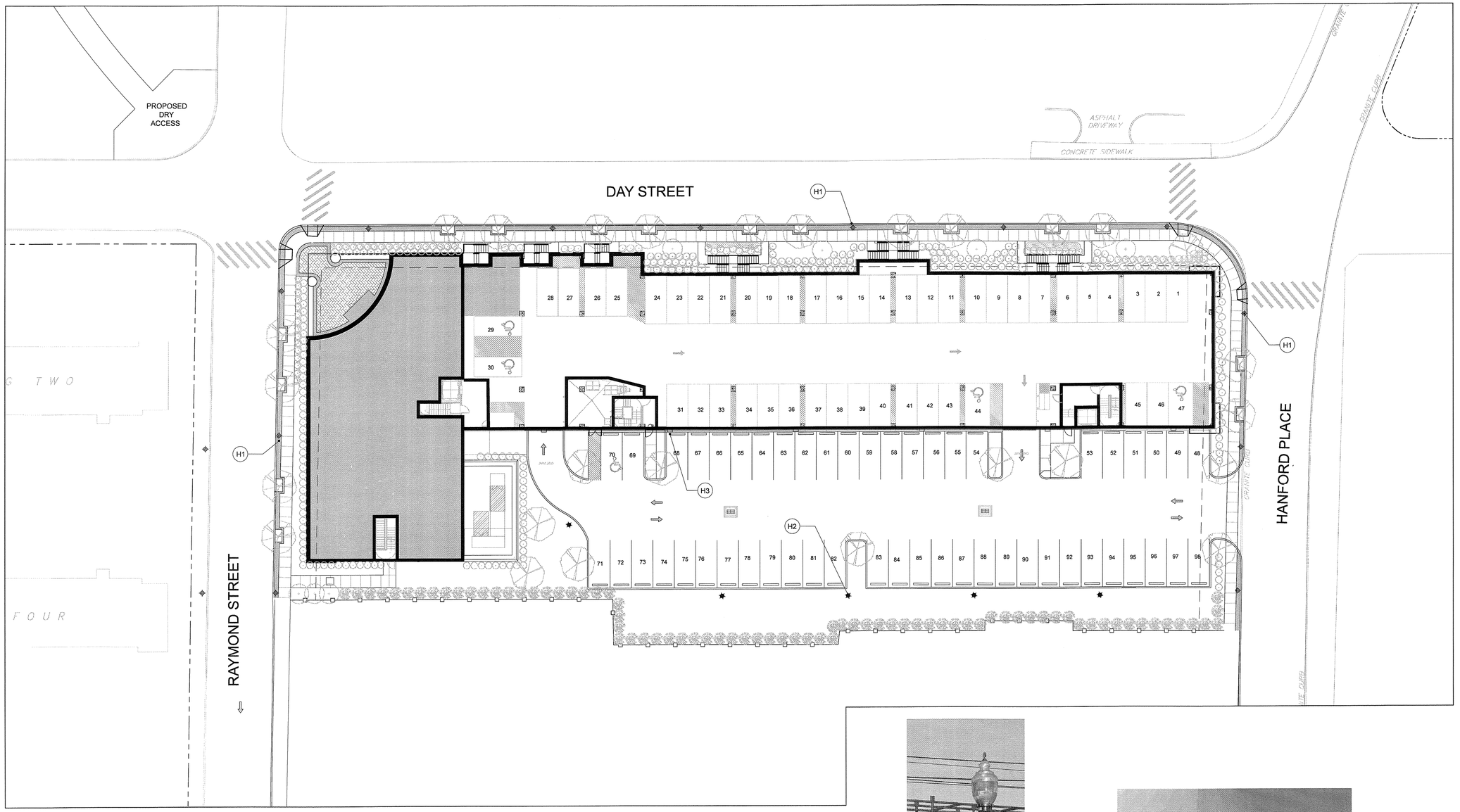

LUMINAIRE SCHEDULE

SYMBOL	QTY	LABEL	FINISH	LAMP	DESCRIPTION	HEIGHT
⊙	12	H1	BLACK	15W H.P.S.	PRODUCT: WSH - PF83. MODEL 424 TYPE III. POST: WASHINGTON PEDESTRIAN - 12'.SUPPLIED BY: SPRING CITY ELECTRICAL. CONTACT: PAUL MELLOR 701.245.0044	14' 11"
✹	5	H2	BLACK	4000K LAMP/ 12000 LUMENS	PRODUCT: THE ARCHETYPE MODEL: 1SA-SAR4-150MH120-BL MADE BY: KIM LIGHTING. CONTACT: CLIFF GILBERT 203.788.0814	12'
⌴	6	H3	BLACK	4000K LAMP/ 12000 LUMENS	PRODUCT: THE ARCHETYPE MODEL: 1W-SAR4-150MH120-BL MADE BY: KIM LIGHTING. CONTACT: CLIFF GILBERT 203.788.0814	12'

GENERAL NOTE:
THE EXCAVATION, HANDLING, AND MANAGEMENT OF ALL SITE SOILS, INCLUDING THE ON-SITE REUSE OF EXISTING SITE SOILS TO THE FULLEST EXTENT FEASIBLE, SHALL BE PERFORMED IN ACCORDANCE WITH THE EARTHWORK SPECIFICATION SECTION 02300 AND THE SOIL MANAGEMENT PLAN PREPARED FOR USE ON THIS PROJECT, PURSUANT TO THE STATE OF CONNECTICUT REMEDIATION STANDARD REGULATIONS (RSRS).
LAWN/LANDSCAPED AREAS OF THE SITE NOT COVERED BY THE PROPOSED BUILDINGS, CONCRETE OR PAVEMENT SHALL BE COVERED BY A GEOTEXTILE MARKER BARRIER AND A MINIMUM 4-FOOT SURFICIAL THICKNESS OF "CLEAN" SOIL, MEETING THE CT RSRS, AT FINISHED GRADE.



H1

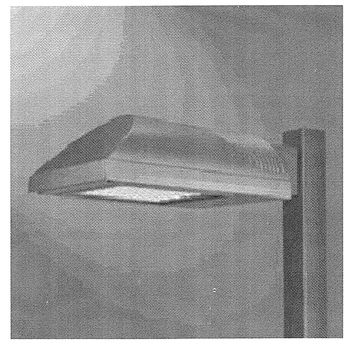

H2

GRAPHIC SCALE

20 0 10 20 40 80
(IN FEET)
1 inch = 20 ft.

Washington Village Phase 1

20 Day Street Building B

Norwalk, CT

Trinity Washington Village Limited Partnership
&
the Norwalk Housing Authority

E-ICON ARCHITECTURE
101 SUMMER ST BOSTON MA 02110
617-451-3333 www.iconarch.com

CONSULTANT

erla eric rains landscape architecture, llc
315 Water Street SoNo, CT 2013513600 www.ericrains.com

STAMP



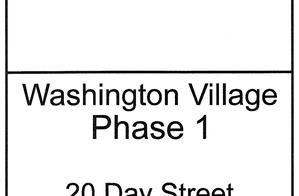

MARK	DATE	DESCRIPTION
4	09.15.2014	PERMIT/PRICING
3	06.13.2014	PRICING
2	11.18.2013	40% CHFACD SET
1	09.19.2013	CAM/SPECIAL PERMIT

PROJECT NO.: 21222
DRAWN BY:
CHECKED BY:

SHEET TITLE

LIGHTING PLAN

L-4.0

True Grip 16 151.65.00.2014

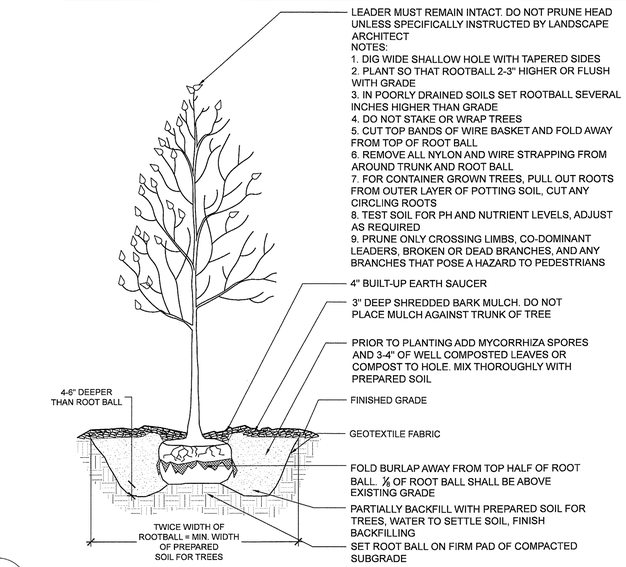

1 L-5.0 TYPICAL TREE PLANTING — NTS

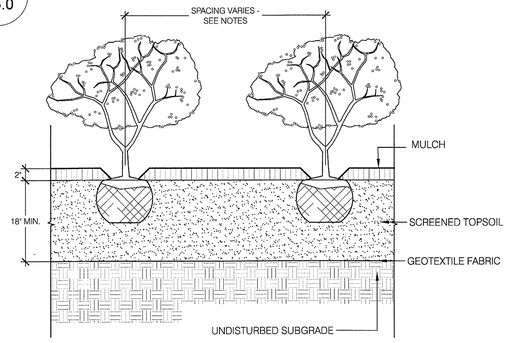

NOTE: PLANTS ARE TO BE SPACED AS REQUIRED BY PLANTING SCHEDULE

2 L-5.0 TYPICAL SHRUB PLANTING — NTS

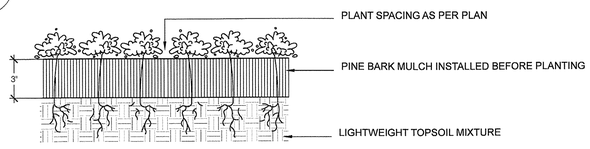

3 L-5.0 TYPICAL GROUNDCOVER PLANTING — NTS

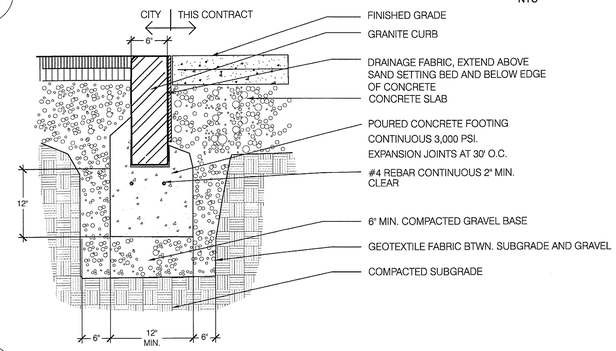

4 L-5.0 FLUSH GRANITE CURB — NTS

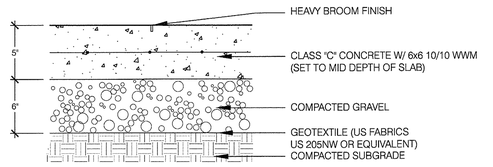

5 L-5.0 CONCRETE — NTS

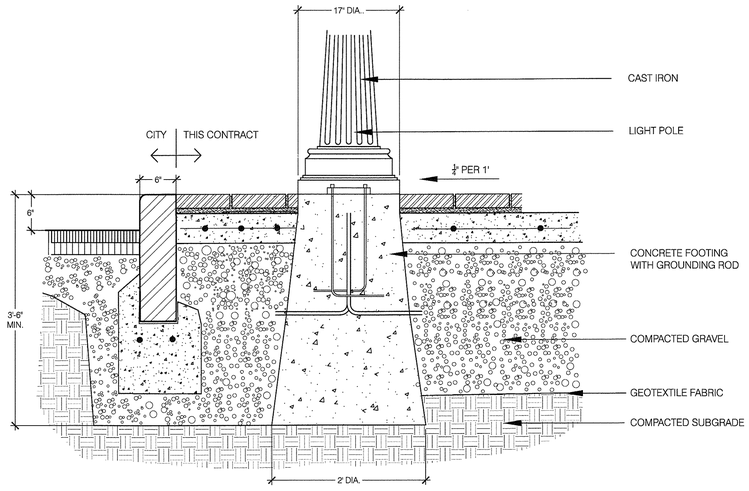

6 L-5.0 LIGHT POLE BASE IN CONCRETE (PAVERS) — NTS

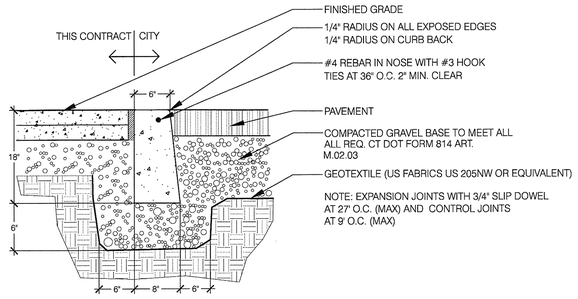

7 L-5.0 FLUSH CONCRETE CURB — NTS

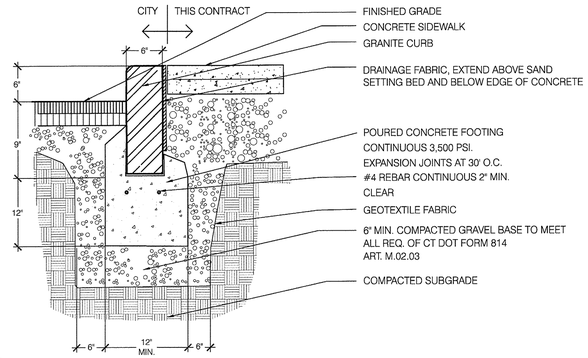

8 L-5.0 GRANITE CURB — NTS

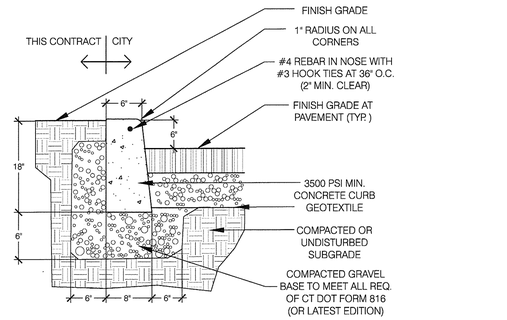

NOTE: EXPANSION JOINTS WITH 3/4" SLIP DOWEL AT 27' O.C. (MAX) AND CONTROL JOINTS AT 9' O.C. (MAX)

9 L-5.0 CONCRETE CURB — NTS

GENERAL NOTE:
THE EXCAVATION, HANDLING, AND MANAGEMENT OF ALL SITE SOILS, INCLUDING THE ON-SITE REUSE OF EXISTING SITE SOILS TO THE FULLEST EXTENT FEASIBLE, SHALL BE PERFORMED IN ACCORDANCE WITH THE EARTHWORK SPECIFICATION SECTION 02300 AND THE SOIL MANAGEMENT PLAN PREPARED FOR USE ON THIS PROJECT, PURSUANT TO THE STATE OF CONNECTICUT REMEDIATION STANDARD REGULATIONS (RSRS). LAWN/LANDSCAPED AREAS OF THE SITE NOT COVERED BY THE PROPOSED BUILDINGS, CONCRETE OR PAVEMENT SHALL BE COVERED BY A GEOTEXTILE MARKER BARRIER AND A MINIMUM 4-FOOT SURFICIAL THICKNESS OF "CLEAN" SOIL, MEETING THE CT RSRS, AT FINISHED GRADE.

Washington Village Phase 1

20 Day Street Building B

Norwalk, CT

Trinity Washington Village Limited Partnership
&
the Norwalk Housing Authority

E-ICON ARCHITECTURE
101 SUMMER ST BOSTON MA 02110
617-451-3333 www.iconarch.com

CONSULTANT

erla e r i c r a i n s landscape architecture, llc
33 N Main Street Suite 302 Norwalk, CT 203.853.1700 www.ericrains.com

STAMP



KEY PLAN

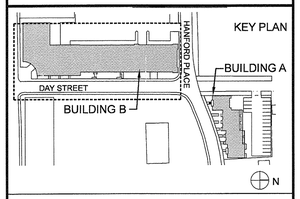

MARK	DATE	DESCRIPTION
4	09.15.2014	PERMIT/PRICING
3	06.13.2014	PRICING
2	11.18.2013	40% CHFACD SET
1	09.19.2013	CAM/SPECIAL PERMIT

PROJECT NO.: 21222
DRAWN BY:
CHECKED BY:

SHEET TITLE

DETAILS

L-5.0

Tue Sep 16 15:09:47 2014

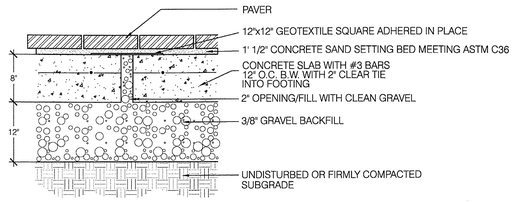

1 / L-5.1 BRICK PAVER - VEHICULAR

NTS

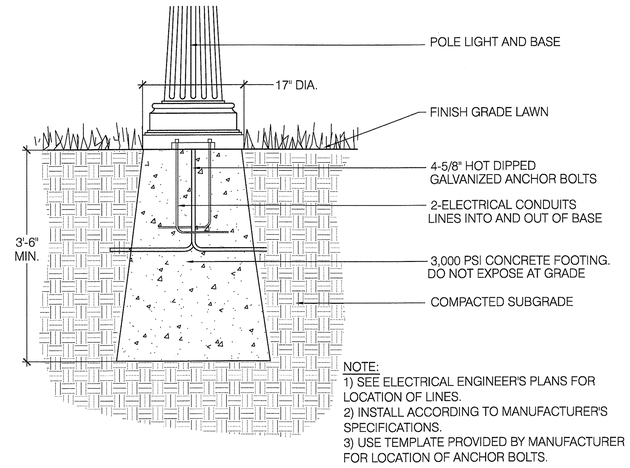

NOTE:
1) SEE ELECTRICAL ENGINEER'S PLANS FOR LOCATION OF LINES.
2) INSTALL ACCORDING TO MANUFACTURER'S SPECIFICATIONS.
3) USE TEMPLATE PROVIDED BY MANUFACTURER FOR LOCATION OF ANCHOR BOLTS.

2 / L-5.1 LIGHT POLE BASE IN CONCRETE (LAWN)

NTS

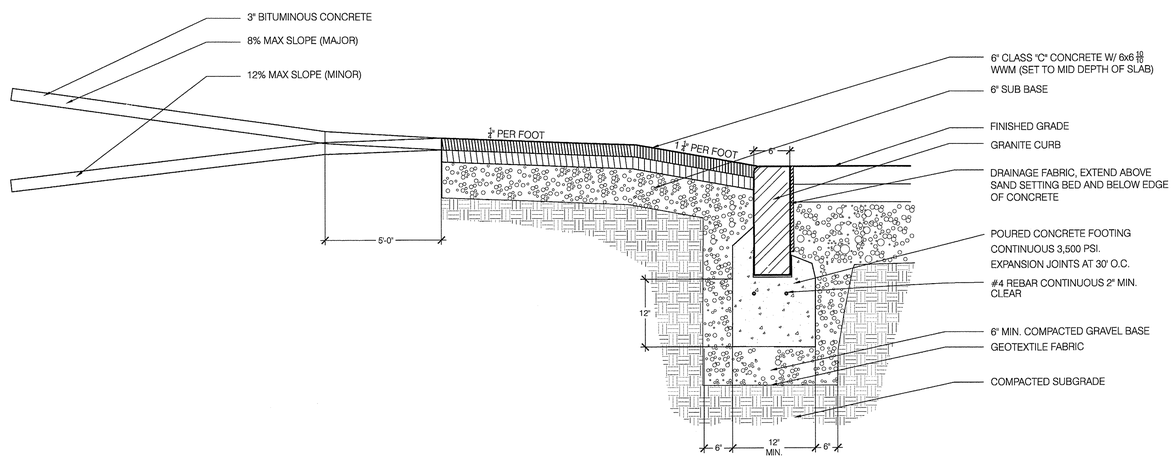

3 / L-5.1 CONCRETE DRIVEWAY RAMP WITH GRANITE CURB

NTS

GENERAL NOTE:
THE EXCAVATION, HANDLING, AND MANAGEMENT OF ALL SITE SOILS, INCLUDING THE ON-SITE REUSE OF EXISTING SITE SOILS TO THE FULLEST EXTENT FEASIBLE, SHALL BE PERFORMED IN ACCORDANCE WITH THE EARTHWORK SPECIFICATION SECTION 02300 AND THE SOIL MANAGEMENT PLAN PREPARED FOR USE ON THIS PROJECT, PURSUANT TO THE STATE OF CONNECTICUT REMEDIATION STANDARD REGULATIONS (RSRS). LAWN/LANDSCAPED AREAS OF THE SITE NOT COVERED BY THE PROPOSED BUILDINGS, CONCRETE OR PAVEMENT SHALL BE COVERED BY A GEOTEXTILE MARKER BARRIER AND A MINIMUM 4-FOOT SURFICIAL THICKNESS OF "CLEAN" SOIL, MEETING THE CT RSRS, AT FINISHED GRADE.

Washington Village Phase 1

20 Day Street Building B

Norwalk, CT

Trinity Washington Village Limited Partnership
&
the Norwalk Housing Authority

E-ICON ARCHITECTURE
101 SUMMER ST BOSTON MA 02110
617-451-3333 www.iconarch.com

CONSULTANT

erla eric rains landscape architecture, llc

STAMP



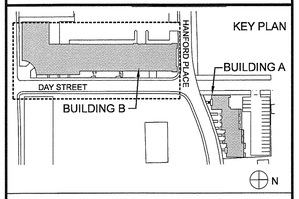

MARK	DATE	DESCRIPTION
4	09.15.2014	PERMIT/PRICING
3	06.13.2014	PRICING
2	11.18.2013	40% CHFACD SET
1	09.19.2013	CAM/SPECIAL PERMIT

PROJECT NO.: 21222
DRAWN BY:
CHECKED BY:

SHEET TITLE

DETAILS

L-5.1

Tue Sep 16 16:00:01 2014

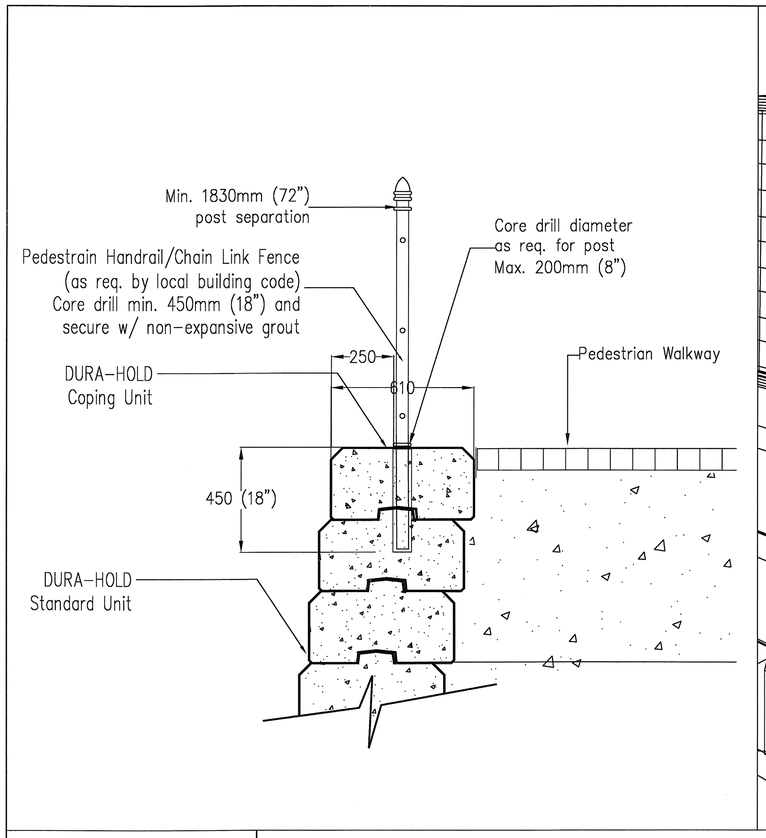

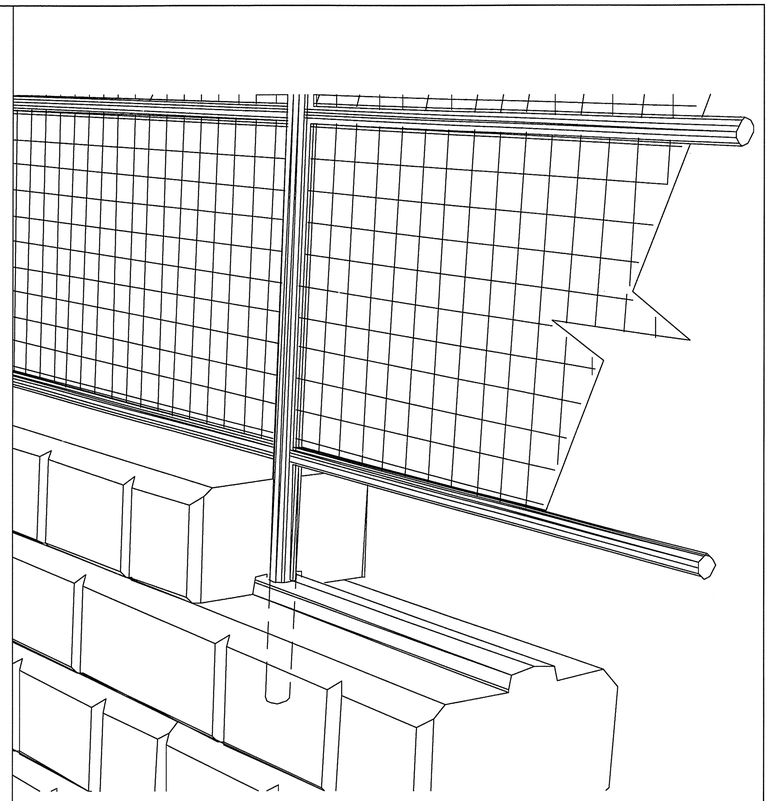

UNILOCK®

1 800 • UNILOCK
TORONTO • NEW YORK
CHICAGO • DETROIT • BUFFALO
CLEVELAND • BOSTON

© Risi Stone Systems, Jan 2001

DURA-HOLD®
PEDESTRIAN HANDRAIL DETAIL

DHDET003.DWG

1 / L-5.2 UNILOCK RETAINING WALL WITH RAILING

NTS

NOTE: DETAIL PROVIDED BY DANIEL NEVIACKAS AT UNILOCK.
DIRECT ANY QUESTIONS TO UNILOCK

GENERAL NOTE:
THE EXCAVATION, HANDLING, AND MANAGEMENT OF ALL SITE SOILS, INCLUDING THE ON-SITE REUSE OF EXISTING SITE SOILS TO THE FULLEST EXTENT FEASIBLE, SHALL BE PERFORMED IN ACCORDANCE WITH THE EARTHWORK SPECIFICATION SECTION 02300 AND THE SOIL MANAGEMENT PLAN PREPARED FOR USE ON THIS PROJECT, PURSUANT TO THE STATE OF CONNECTICUT REMEDIATION STANDARD REGULATIONS (RSRS). LAWN/LANDSCAPED AREAS OF THE SITE NOT COVERED BY THE PROPOSED BUILDINGS, CONCRETE OR PAVEMENT SHALL BE COVERED BY A GEOTEXTILE MARKER BARRIER AND A MINIMUM 4-FOOT SURFICIAL THICKNESS OF "CLEAN" SOIL, MEETING THE CT RSRS, AT FINISHED GRADE.

Tue Sep 16 16:00:48 2014

Washington Village Phase 1

20 Day Street Building B

Norwalk, CT

Trinity Washington Village Limited Partnership
&
the Norwalk Housing Authority

E-ICON ARCHITECTURE
101 SUMMER ST BOSTON MA 02110
617-451-3333 www.iconarch.com

CONSULTANT

erla eric rains landscape architecture, llc

STAMP



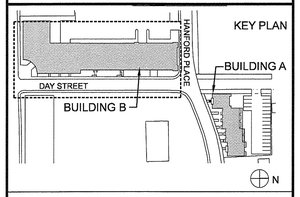

MARK	DATE	DESCRIPTION
4	09.15.2014	PERMIT/PRICING
3	06.13.2014	PRICING
2	11.18.2013	40% CHFACD SET
1	09.19.2013	CAM/SPECIAL PERMIT

PROJECT NO.: 21222
DRAWN BY:
CHECKED BY:

SHEET TITLE

DETAILS

L-5.2

GENERAL NOTES

1. STUDS OF ALL DEMISING WALLS CENTERED ON GRID LINES, UNLESS OTHERWISE NOTED

2. ALL VERTICAL SHAFTS 1HR FIRE RATED ENCLOSURE, UNLESS CONNECTING MORE THAN 3 REDIENTIAL FLOORS. (BETWEEN COLUMN LINES 4+7)

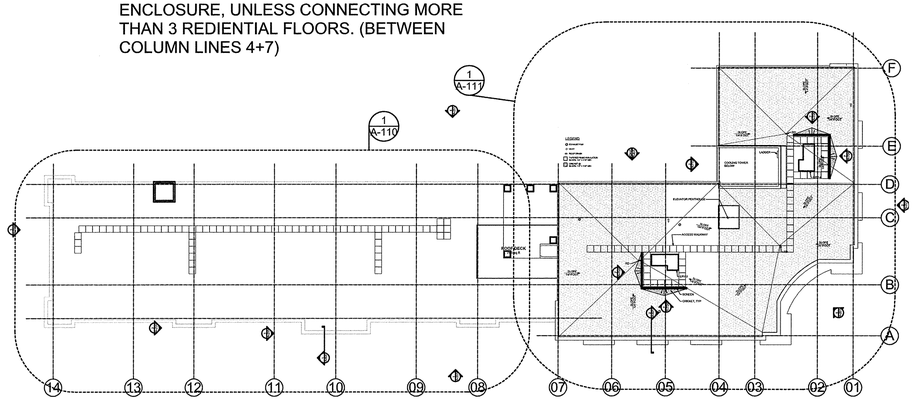

6 ROOF PLAN
SCALE: 1/32" = 1'-0"

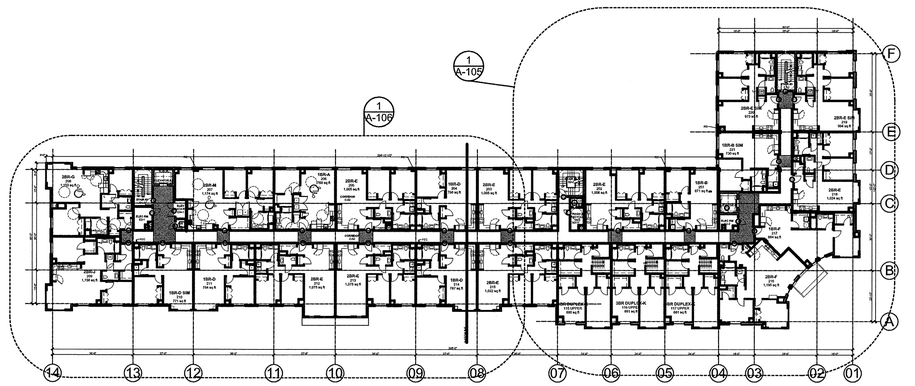

3 SECOND FLOOR PLAN
SCALE: 1/32" = 1'-0"

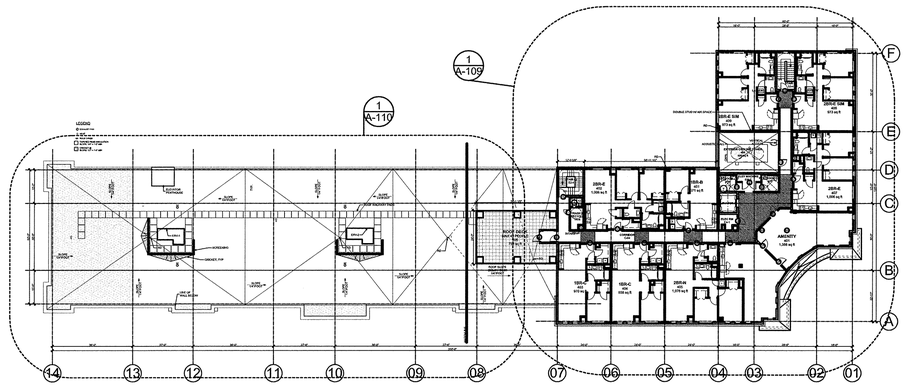

5 FOURTH FLOOR PLAN
SCALE: 1/32" = 1'-0"

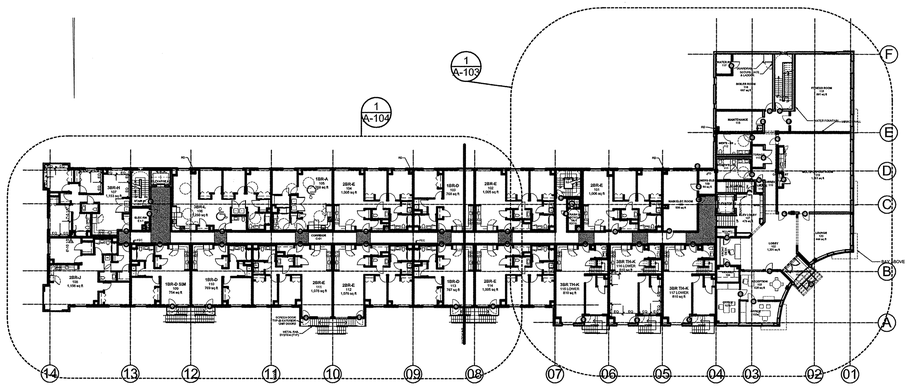

2 FIRST FLOOR PLAN
SCALE: 1/32" = 1'-0"

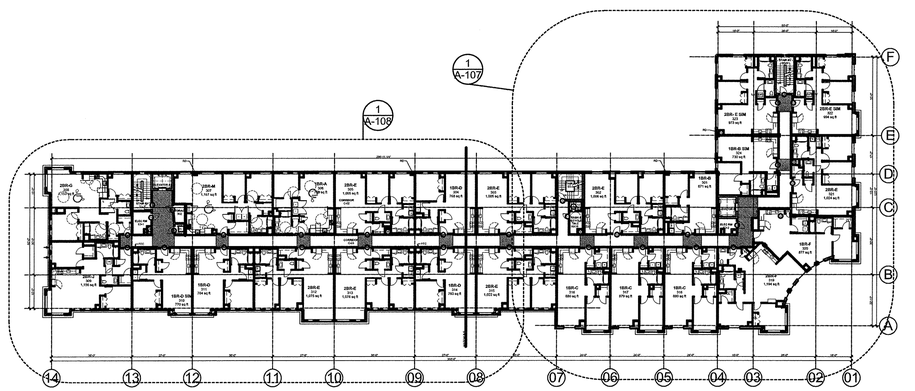

4 THIRD FLOOR PLAN
SCALE: 1/32" = 1'-0"

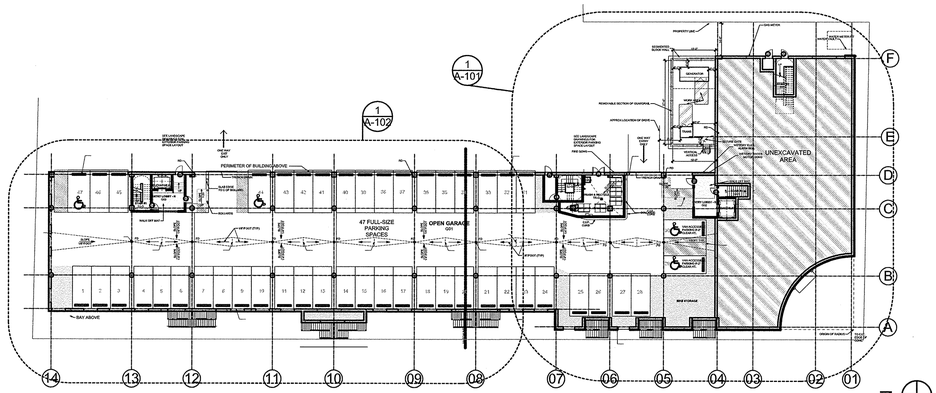

1 GROUND LEVEL PLAN
SCALE: 1/32" = 1'-0"

Washington Village Phase 1

20 Day Street Building B

Norwalk, CT

Trinity Washington Village Limited Partnership
&
the Norwalk Housing Authority

E-ICON ARCHITECTURE
101 SUMMER ST BOSTON MA 02110
617-451-3333 www.iconarch.com

CONSULTANT

STAMP

MARK	DATE	DESCRIPTION
	09-15-2014	PERMIT/ PRICING
	06-13-2014	PRICING
	11-18-2013	40% CHFA
	09-19-2013	CAM/ SPECIAL PERMIT

PROJECT NO.: 21222
DRAWN BY: JR,RA,AF,GA, KH, SO
CHECKED BY: KH

SHEET TITLE

BUILDING B KEY PLANS

A-001

9/18/2014 3:28 PM

GENERAL NOTES

1. STUDS OF ALL DEMISING WALLS CENTERED ON GRID LINES, UNLESS OTHERWISE NOTED

2. ALL VERTICAL SHAFTS 1HR FIRE RATED ENCLOSURE, UNLESS CONNECTING MORE THAN 3 REDIENTIAL FLOORS. (BETWEEN COLUMN LINES 4+7)

CPT-2: CARPET TYPE 2

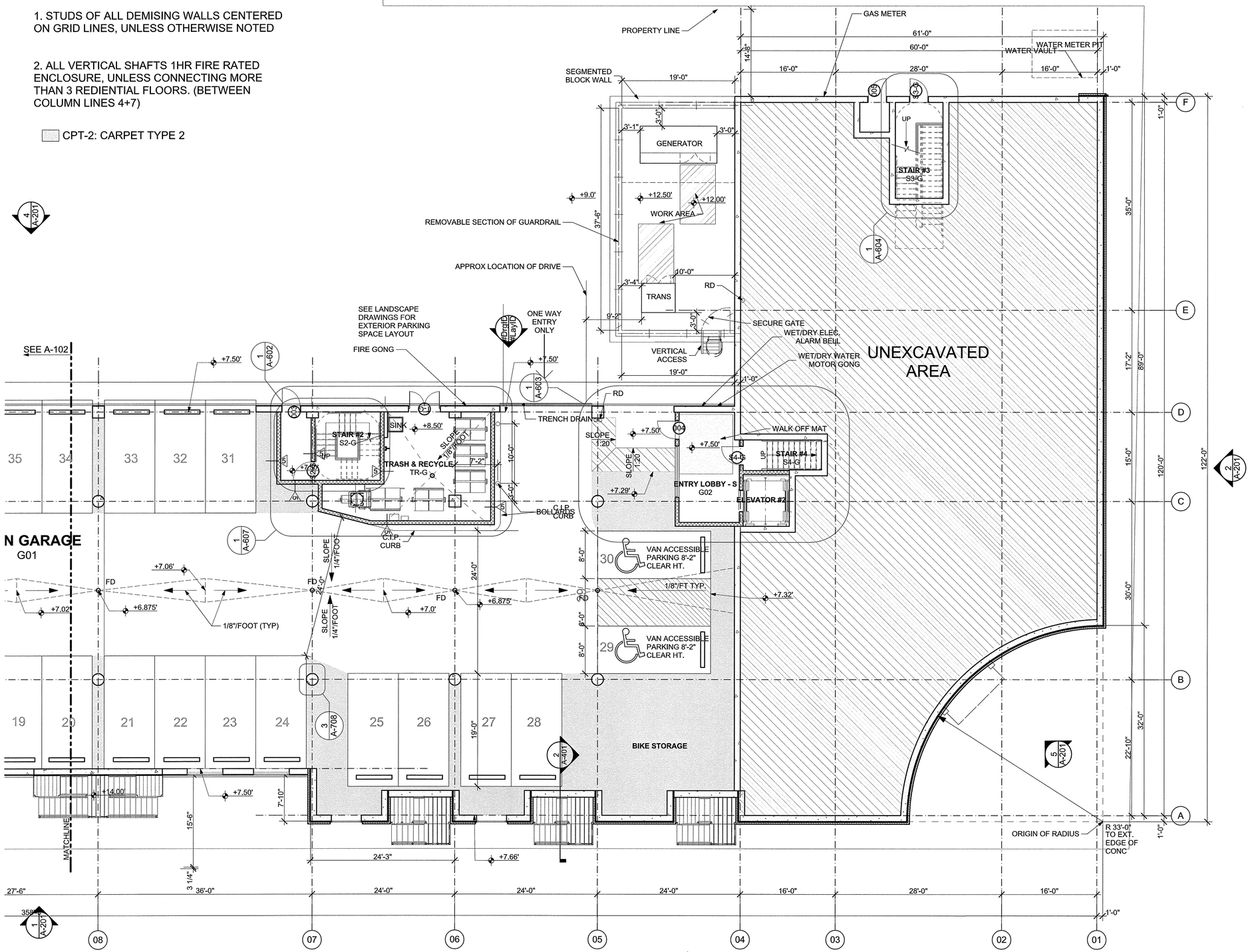

1 GROUND LEVEL PLAN

SCALE: 1/8" = 1'-0"

Washington Village Phase 1

20 Day Street Building B

Norwalk, CT

Trinity Washington Village Limited Partnership
&
the Norwalk Housing Authority

E-ICON ARCHITECTURE
101 SUMMER ST BOSTON MA 02110
617-451-3333 www.iconarch.com

CONSULTANT

STAMP



KEY PLAN

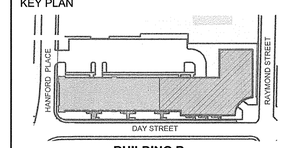

BUILDING B

MARK	DATE	DESCRIPTION
	09-15-2014	PERMIT/ PRICING
	06-13-2014	PRICING
	11-18-2013	40% CHFA
	09-19-2013	CAM/ SPECIAL PERMIT

PROJECT NO.: 21222
DRAWN BY: JR,RA,AF,GA, KH, SO
CHECKED BY:

SHEET TITLE

BUILDING B
GROUND LEVEL PLAN
(SOUTH WING)

A-101

9/19/2014 3:28 PM

GENERAL NOTES

1. STUDS OF ALL DEMISING WALLS CENTERED ON GRID LINES, UNLESS OTHERWISE NOTED

2. ALL VERTICAL SHAFTS 1HR FIRE RATED ENCLOSURE, UNLESS CONNECTING MORE THAN 3 REDIENTIAL FLOORS. (BETWEEN COLUMN LINES 4+7)

CPT-2: CARPET TYPE 2

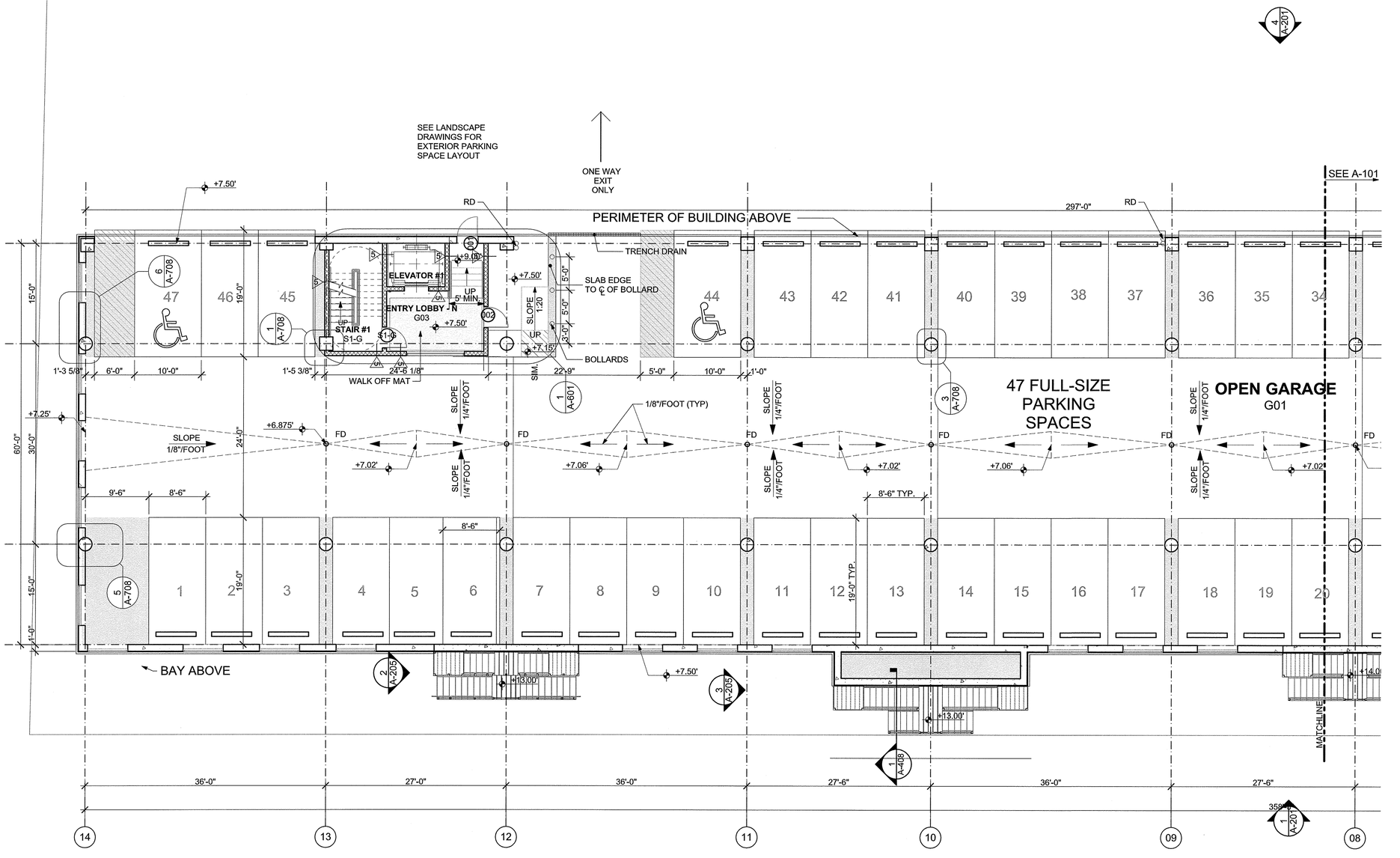

1 GROUND LEVEL PLAN
SCALE: 1/8" = 1'-0"

Washington Village Phase 1

20 Day Street Building B

Norwalk, CT

Trinity Washington Village Limited Partnership & the Norwalk Housing Authority

E-ICON ARCHITECTURE
101 SUMMER ST BOSTON MA 02110
617-451-3333 www.iconarch.com

CONSULTANT

STAMP



KEY PLAN

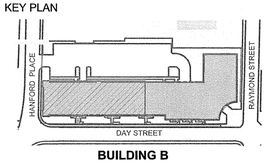

BUILDING B

MARK	DATE	DESCRIPTION
	09-15-2014	PERMIT/ PRICING
	06-13-2014	PRICING
	11-18-2013	40% CHFA
	09-19-2013	CAM/ SPECIAL PERMIT

PROJECT NO.: 21222
DRAWN BY: JR,RA,AF,GA, KH, SO
CHECKED BY:

SHEET TITLE

BUILDING B GROUND LEVEL PLAN (NORTH WING)

A-102

9/18/2014 3:28 PM

GENERAL NOTES

1. STUDS OF ALL DEMISING WALLS CENTERED ON GRID LINES, UNLESS OTHERWISE NOTED

2. ALL VERTICAL SHAFTS 1HR FIRE RATED ENCLOSURE, UNLESS CONNECTING MORE THAN 3 REDIENTIAL FLOORS. (BETWEEN COLUMN LINES 4+7)

CPT-2: CARPET TYPE 2

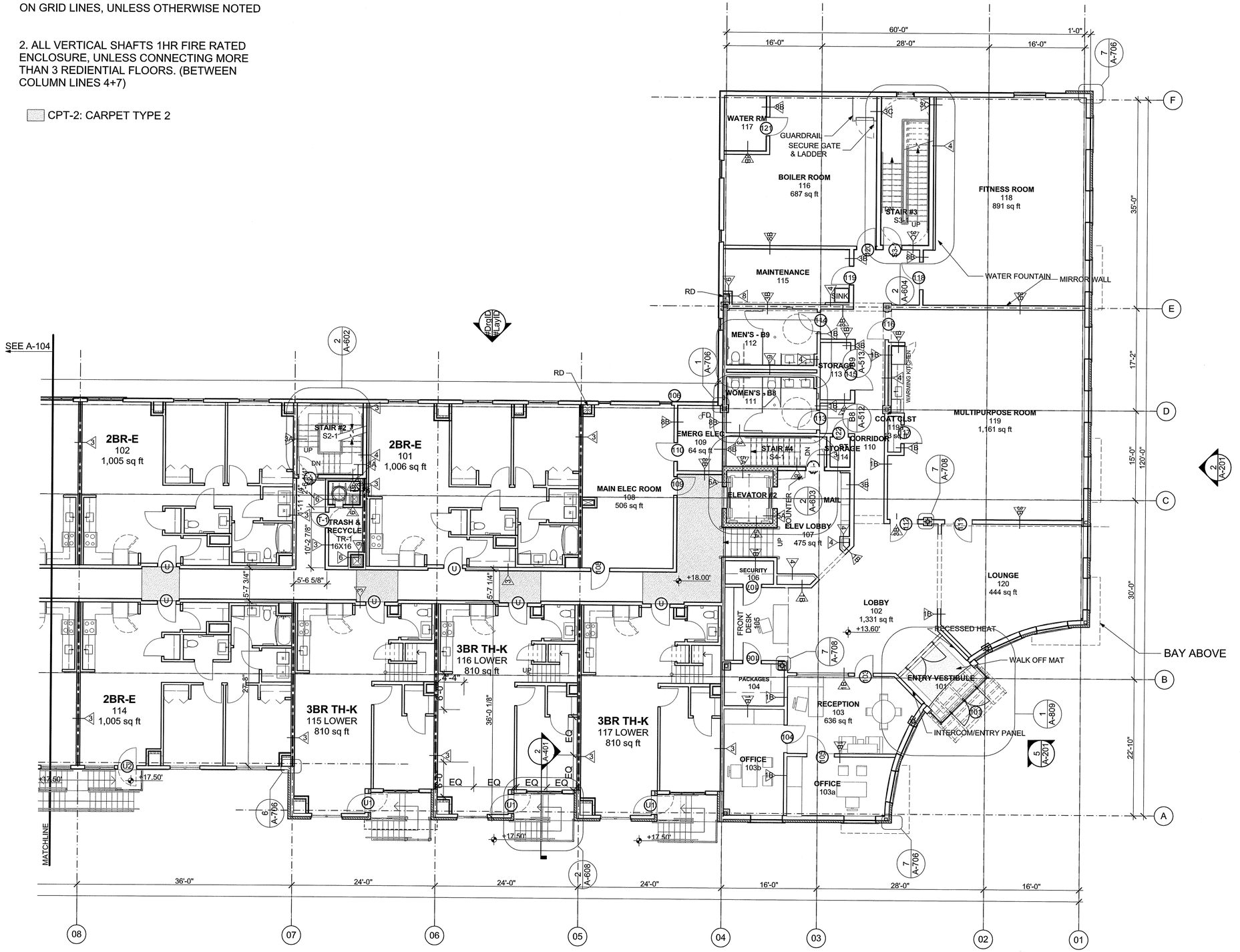

1 FIRST FLOOR PLAN
SCALE: 1/8" = 1'-0"

Washington Village Phase 1

20 Day Street Building B

Norwalk, CT

Trinity Washington Village Limited Partnership
&
the Norwalk Housing Authority

E-ICON ARCHITECTURE
101 SUMMER ST BOSTON MA 02110
617-451-3333 www.iconarch.com

CONSULTANT

STAMP

KEY PLAN

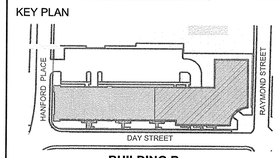

BUILDING B

MARK	DATE	DESCRIPTION
	09-15-2014	PERMIT/ PRICING
	06-13-2014	PRICING
	11-18-2013	40% CHFA
	09-19-2013	CAM/ SPECIAL PERMIT

PROJECT NO.: 21222
DRAWN BY: JR,RA,AF,GA, KH, SO
CHECKED BY:

SHEET TITLE

BUILDING B
FIRST FLOOR PLAN
(SOUTH WING)

A-103

GENERAL NOTES

1. STUDS OF ALL DEMISING WALLS CENTERED ON GRID LINES, UNLESS OTHERWISE NOTED

2. ALL VERTICAL SHAFTS 1HR FIRE RATED ENCLOSURE, UNLESS CONNECTING MORE THAN 3 REDIENTIAL FLOORS. (BETWEEN COLUMN LINES 4+7)

CPT-2: CARPET TYPE 2

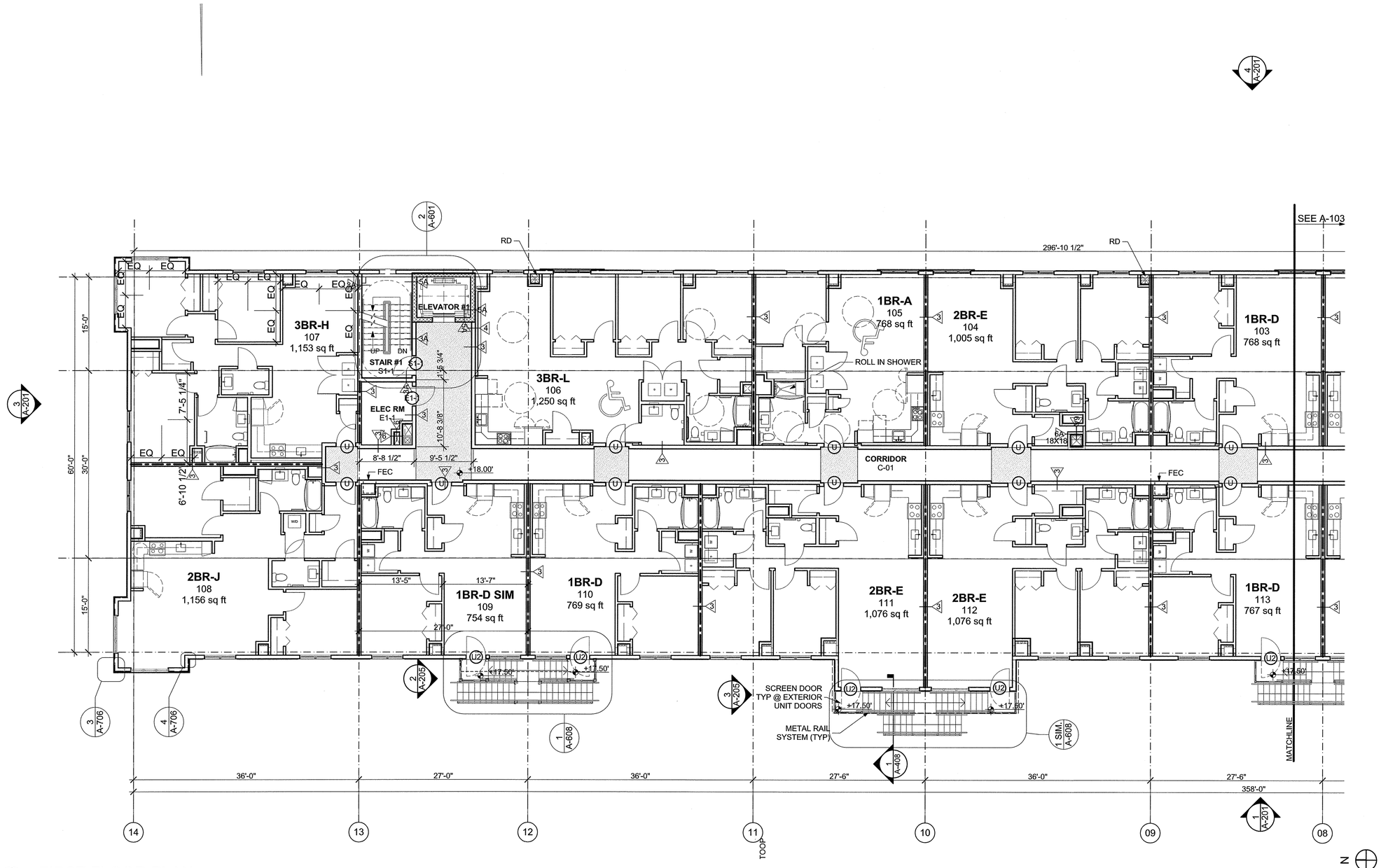

1 FIRST FLOOR PLAN
SCALE: 1/8" = 1'-0"

Washington Village Phase 1

20 Day Street Building B

Norwalk, CT

Trinity Washington Village Limited Partnership
&
the Norwalk Housing Authority

E-ICON ARCHITECTURE
101 SUMMER ST BOSTON MA 02110
617-451-3333 www.iconarch.com

CONSULTANT

STAMP

KEY PLAN

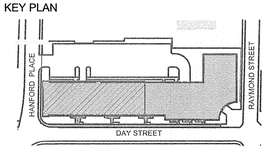

BUILDING B

MARK	DATE	DESCRIPTION
	09-15-2014	PERMIT/ PRICING
	06-13-2014	PRICING
	11-18-2013	40% CHFA
	09-19-2013	CAM/ SPECIAL PERMIT

PROJECT NO.: 21222
DRAWN BY: JR,RA,AF,GA, KH, SO
CHECKED BY:

SHEET TITLE

BUILDING B
FIRST FLOOR PLAN
(NORTH WING)

A-104

9/18/2014 3:28 PM

GENERAL NOTES

1. STUDS OF ALL DEMISING WALLS CENTERED ON GRID LINES, UNLESS OTHERWISE NOTED

2. ALL VERTICAL SHAFTS 1HR FIRE RATED ENCLOSURE, UNLESS CONNECTING MORE THAN 3 REDIENTIAL FLOORS. (BETWEEN COLUMN LINES 4+7)

CPT-2: CARPET TYPE 2

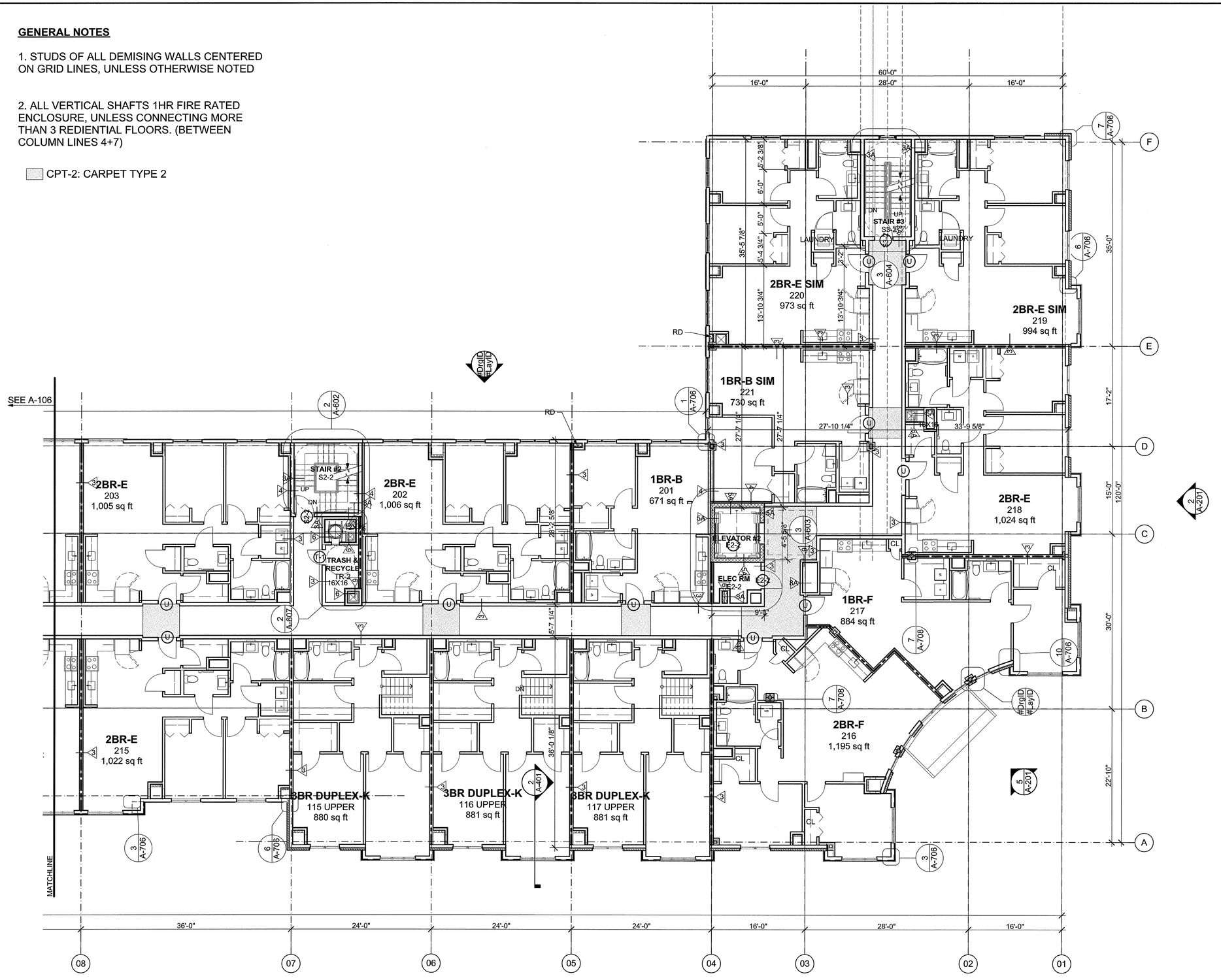

1 SECOND FLOOR PLAN

SCALE: 1/8" = 1'-0"

N

0 4' 8' 16'

Washington Village Phase 1

20 Day Street Building B

Norwalk, CT

Trinity Washington Village Limited Partnership
&
the Norwalk Housing Authority

E-ICON ARCHITECTURE
101 SUMMER ST BOSTON MA 02110
617-451-3333 www.iconarch.com

CONSULTANT

STAMP

STATE OF CONNECTICUT
STEVEN A. HEINO
NO. 28864
REGISTERED ARCHITECT

KEY PLAN

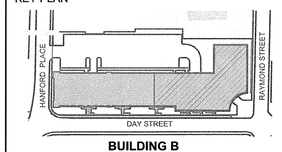

BUILDING B

MARK	DATE	DESCRIPTION
	09-15-2014	PERMIT/ PRICING
	06-13-2014	PRICING
	11-18-2013	40% CHFA
	09-19-2013	CAM/ SPECIAL PERMIT

PROJECT NO.: 21222
DRAWN BY: JR,RA,AF,GA, KH, SO
CHECKED BY:

SHEET TITLE

BUILDING B
SECOND FLOOR PLAN
(SOUTH WING)

A-105

9/19/2014 9:28 PM

GENERAL NOTES

1. STUDS OF ALL DEMISING WALLS CENTERED ON GRID LINES, UNLESS OTHERWISE NOTED

2. ALL VERTICAL SHAFTS 1HR FIRE RATED ENCLOSURE, UNLESS CONNECTING MORE THAN 3 REDIENTIAL FLOORS. (BETWEEN COLUMN LINES 4+7)

CPT-2: CARPET TYPE 2

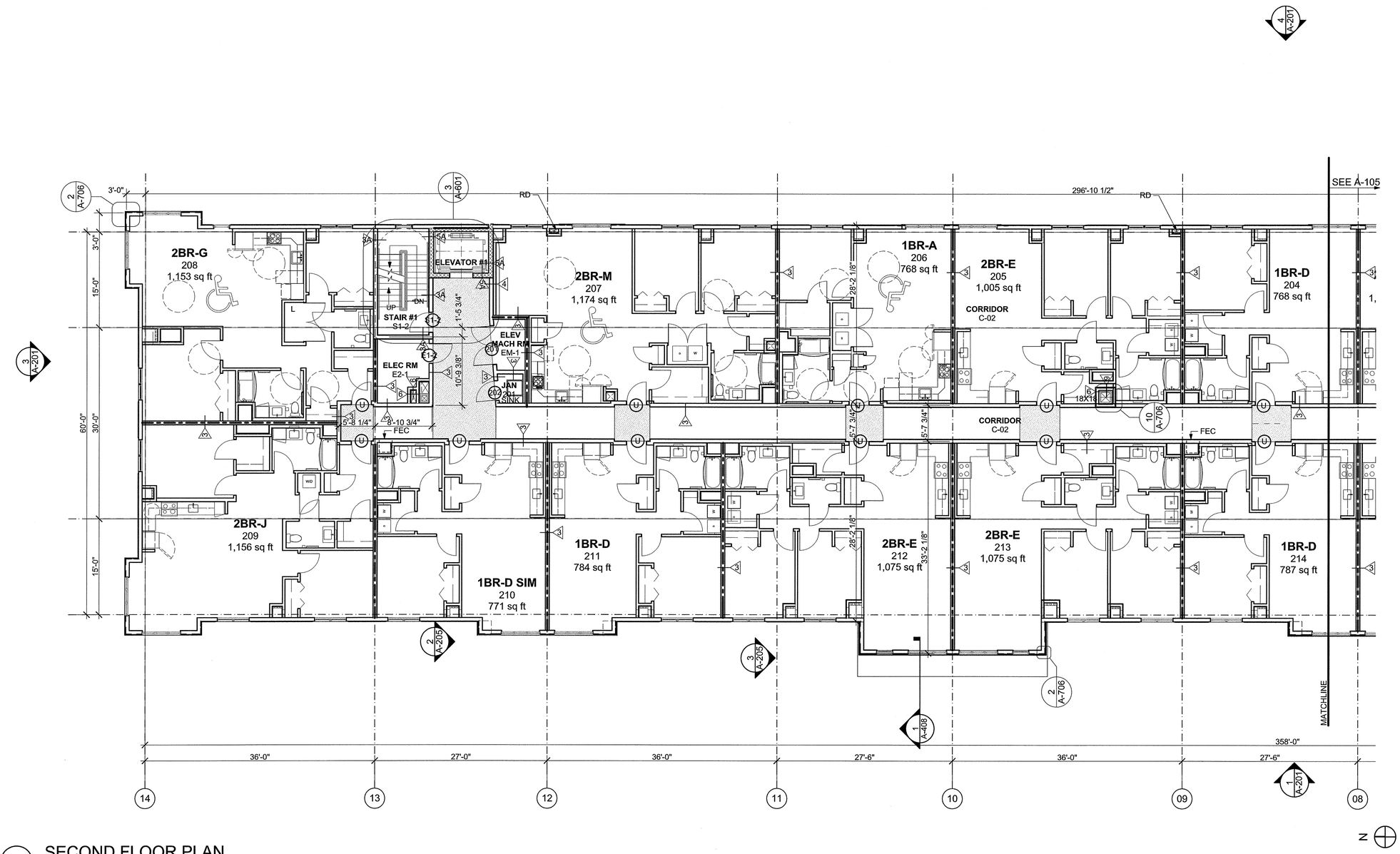

1 SECOND FLOOR PLAN
SCALE: 1/8" = 1'-0"

Washington Village Phase 1

20 Day Street Building B

Norwalk, CT

Trinity Washington Village Limited Partnership
&
the Norwalk Housing Authority

E-ICON ARCHITECTURE
101 SUMMER ST BOSTON MA 02110
617-451-3333 www.iconarch.com

CONSULTANT

STAMP

STATE OF CONNECTICUT
STEVEN A. HEIKIN
NO. 8664
LICENSED ARCHITECT

KEY PLAN

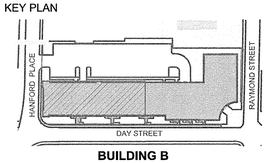

BUILDING B

MARK	DATE	DESCRIPTION
	09-15-2014	PERMIT/ PRICING
	06-13-2014	PRICING
	11-18-2013	40% CHFA
	09-19-2013	CAM/ SPECIAL PERMIT

PROJECT NO.: 21222
DRAWN BY: JR,RA,AF,GA, KH, SO
CHECKED BY:

SHEET TITLE

BUILDING B
SECOND FLOOR PLAN
(NORTH WING)

A-106

9/18/2014 3:28 PM

GENERAL NOTES

1. STUDS OF ALL DEMISING WALLS CENTERED ON GRID LINES, UNLESS OTHERWISE NOTED

2. ALL VERTICAL SHAFTS 1HR FIRE RATED ENCLOSURE, UNLESS CONNECTING MORE THAN 3 REDIENTIAL FLOORS. (BETWEEN COLUMN LINES 4+7)

CPT-2: CARPET TYPE 2

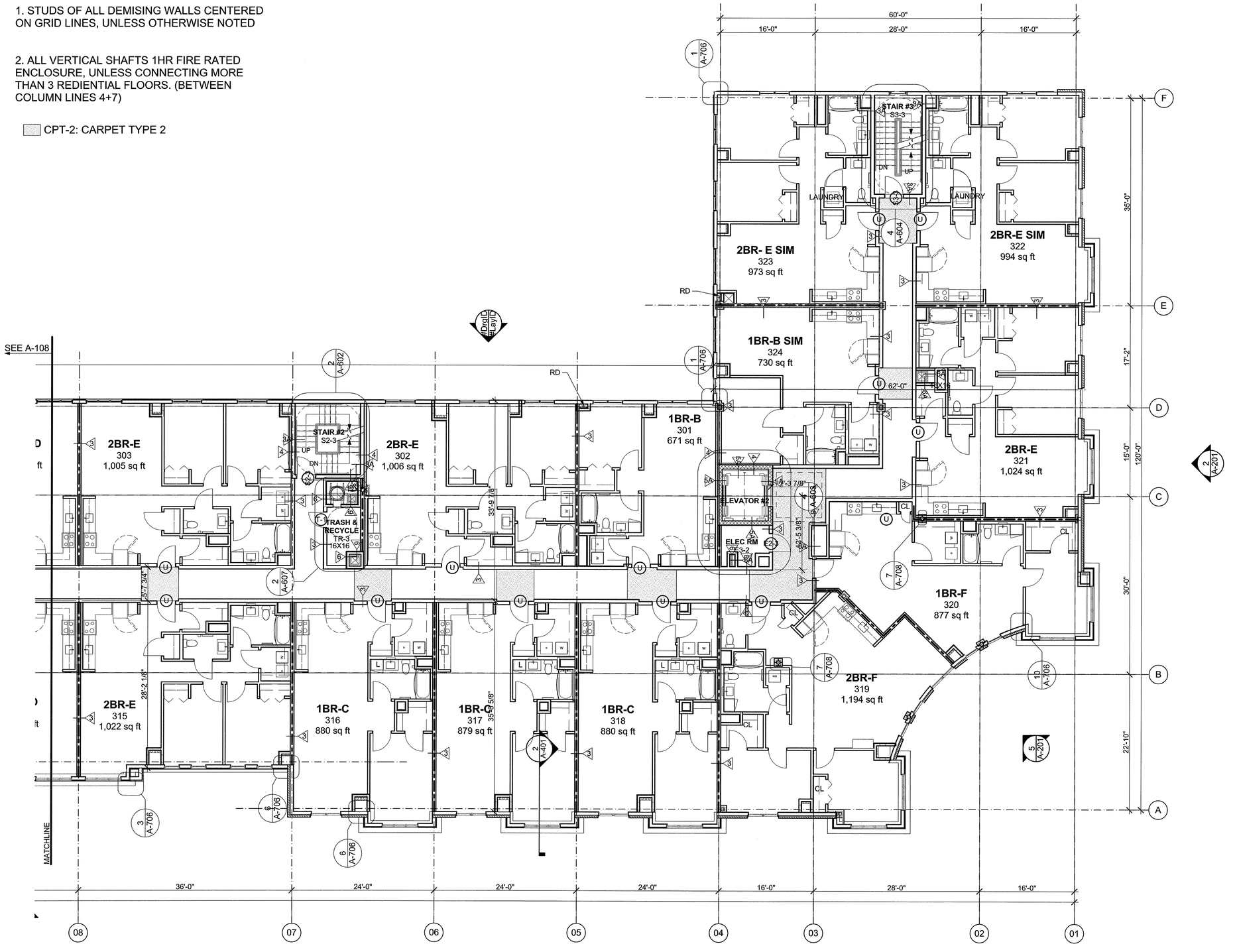

1 THIRD FLOOR PLAN
SCALE: 1/8" = 1'-0"

Washington Village Phase 1

20 Day Street Building B

Norwalk, CT

Trinity Washington Village Limited Partnership
&
the Norwalk Housing Authority

E-ICON ARCHITECTURE
101 SUMMER ST BOSTON MA 02110
617-451-3333 www.iconarch.com

CONSULTANT

STAMP

STATE OF CONNECTICUT
STEVEN A. HEIKIN
NO. 8864
LICENSED ARCHITECT

KEY PLAN

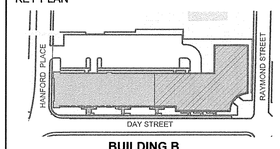

BUILDING B

MARK	DATE	DESCRIPTION
	09-15-2014	PERMIT/ PRICING
	06-13-2014	PRICING
	11-18-2013	40% CHFA
	09-19-2013	CAM/ SPECIAL PERMIT

PROJECT NO.: 21222
DRAWN BY: JR,RA,AF,GA, KH, SO
CHECKED BY:

SHEET TITLE

BUILDING B
THIRD FLOOR PLAN
(SOUTH WING)

A-107

9/18/2014 3:28 PM

GENERAL NOTES

1. STUDS OF ALL DEMISING WALLS CENTERED ON GRID LINES, UNLESS OTHERWISE NOTED

2. ALL VERTICAL SHAFTS 1HR FIRE RATED ENCLOSURE, UNLESS CONNECTING MORE THAN 3 REDIENTIAL FLOORS. (BETWEEN COLUMN LINES 4+7)

CPT-2: CARPET TYPE 2

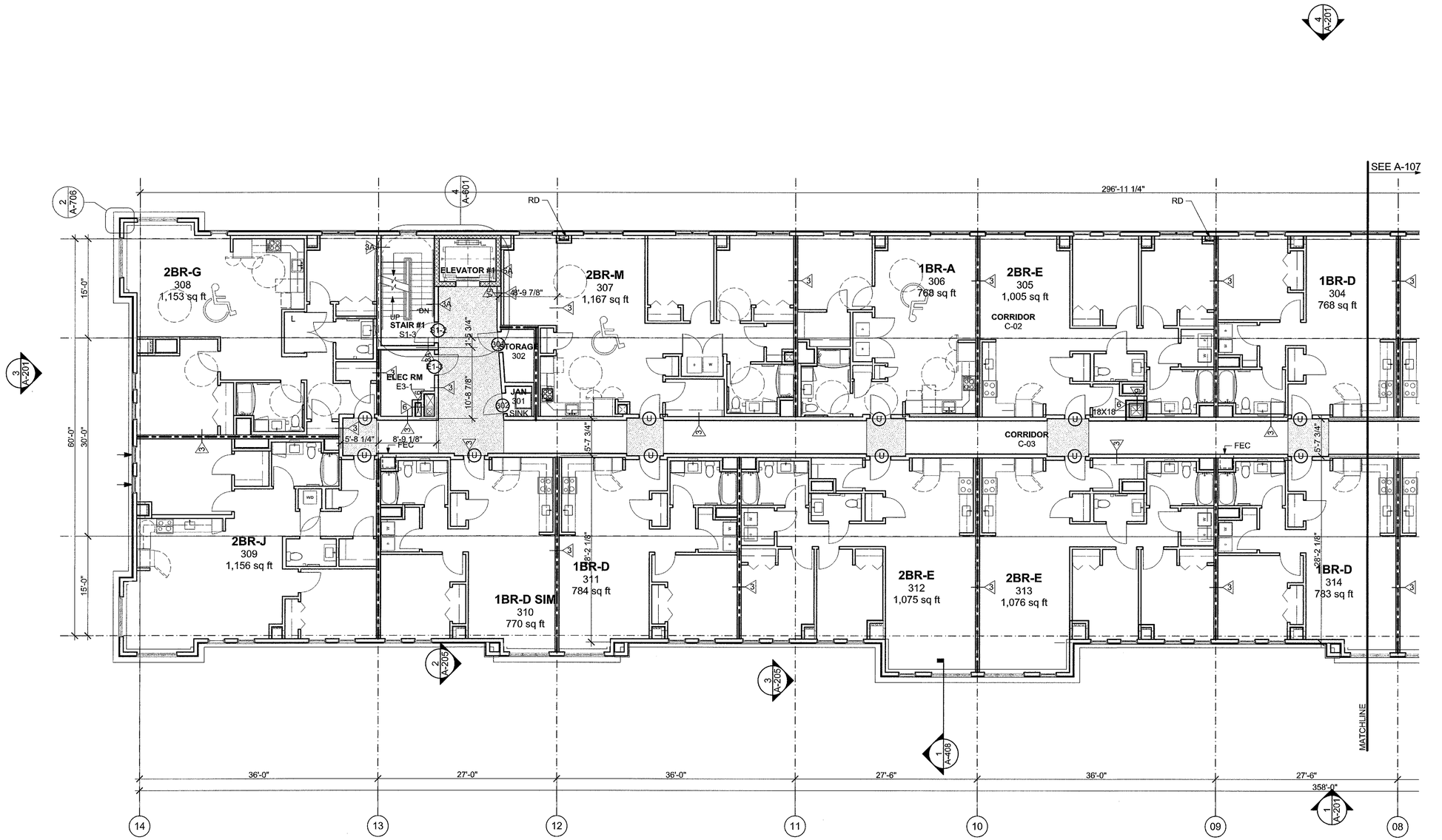

1 THIRD FLOOR PLAN
SCALE: 1/8" = 1'-0"

Washington Village Phase 1

20 Day Street Building B

Norwalk, CT

Trinity Washington Village Limited Partnership
&
the Norwalk Housing Authority

E-ICON ARCHITECTURE
101 SUMMER ST BOSTON MA 02110
617-451-3333 www.iconarch.com

CONSULTANT

STAMP

KEY PLAN

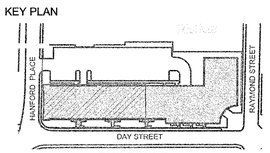

BUILDING B

MARK	DATE	DESCRIPTION
	09-15-2014	PERMIT/ PRICING
	06-13-2014	PRICING
	11-18-2013	40% CHFA
	09-19-2013	CAM/ SPECIAL PERMIT

PROJECT NO.: 21222
DRAWN BY: JR,RA,AF,GA, KH, SO
CHECKED BY:

SHEET TITLE

BUILDING B
THIRD FLOOR PLAN
(NORTH WING)

A-108

GENERAL NOTES

1. STUDS OF ALL DEMISING WALLS CENTERED ON GRID LINES, UNLESS OTHERWISE NOTED

2. ALL VERTICAL SHAFTS 1HR FIRE RATED ENCLOSURE, UNLESS CONNECTING MORE THAN 3 REDIENTIAL FLOORS. (BETWEEN COLUMN LINES 4+7)

CPT-2: CARPET TYPE 2

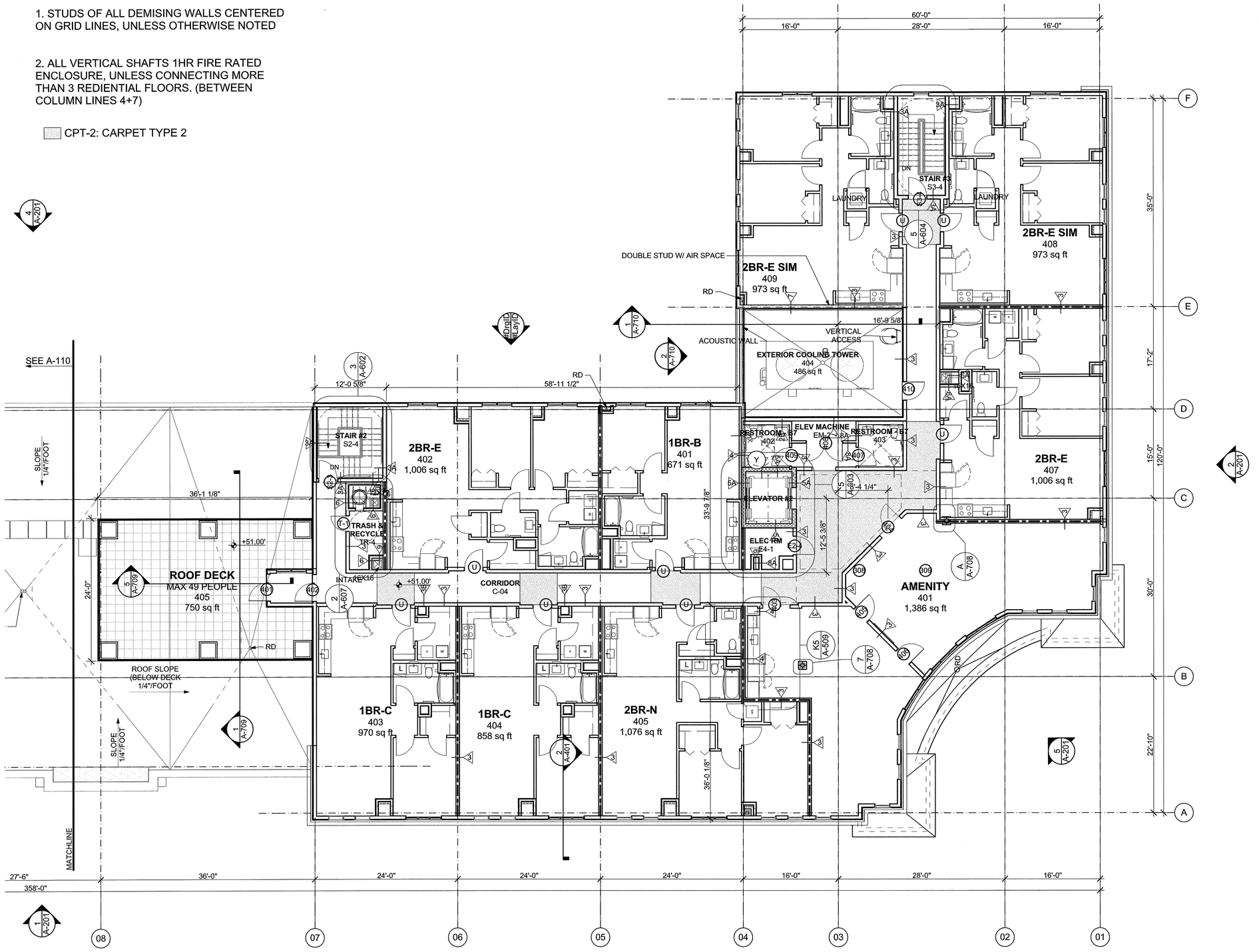

1 FOURTH FLOOR PLAN
SCALE: 1/8" = 1'-0"

Washington Village Phase 1

20 Day Street Building B

Norwalk, CT

Trinity Washington Village Limited Partnership
&
the Norwalk Housing Authority

E-ICON ARCHITECTURE
101 SUMMER ST BOSTON MA 02110
617-451-3333 www.iconarch.com

CONSULTANT

STAMP

KEY PLAN

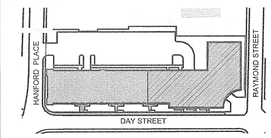

BUILDING B

MARK	DATE	DESCRIPTION
	09-15-2014	PERMIT/ PRICING
	06-13-2014	PRICING
	11-18-2013	40% CHFA
	09-19-2013	CAM/ SPECIAL PERMIT

PROJECT NO.: 21222
DRAWN BY: JR,RA,AF,GA, KH, SO
CHECKED BY:

SHEET TITLE

BUILDING B
FOURTH FLOOR PLAN
(SOUTH WING)

A-109

LEGEND

- EXHAUST FAN
- VENT
- ROOF DRAIN
- TAPERED RIGID INSULATION SLOPE: 1/4" = 1'-0" MIN
- CRICKET @ SLOPE: 1/2" = 1'-0" MIN

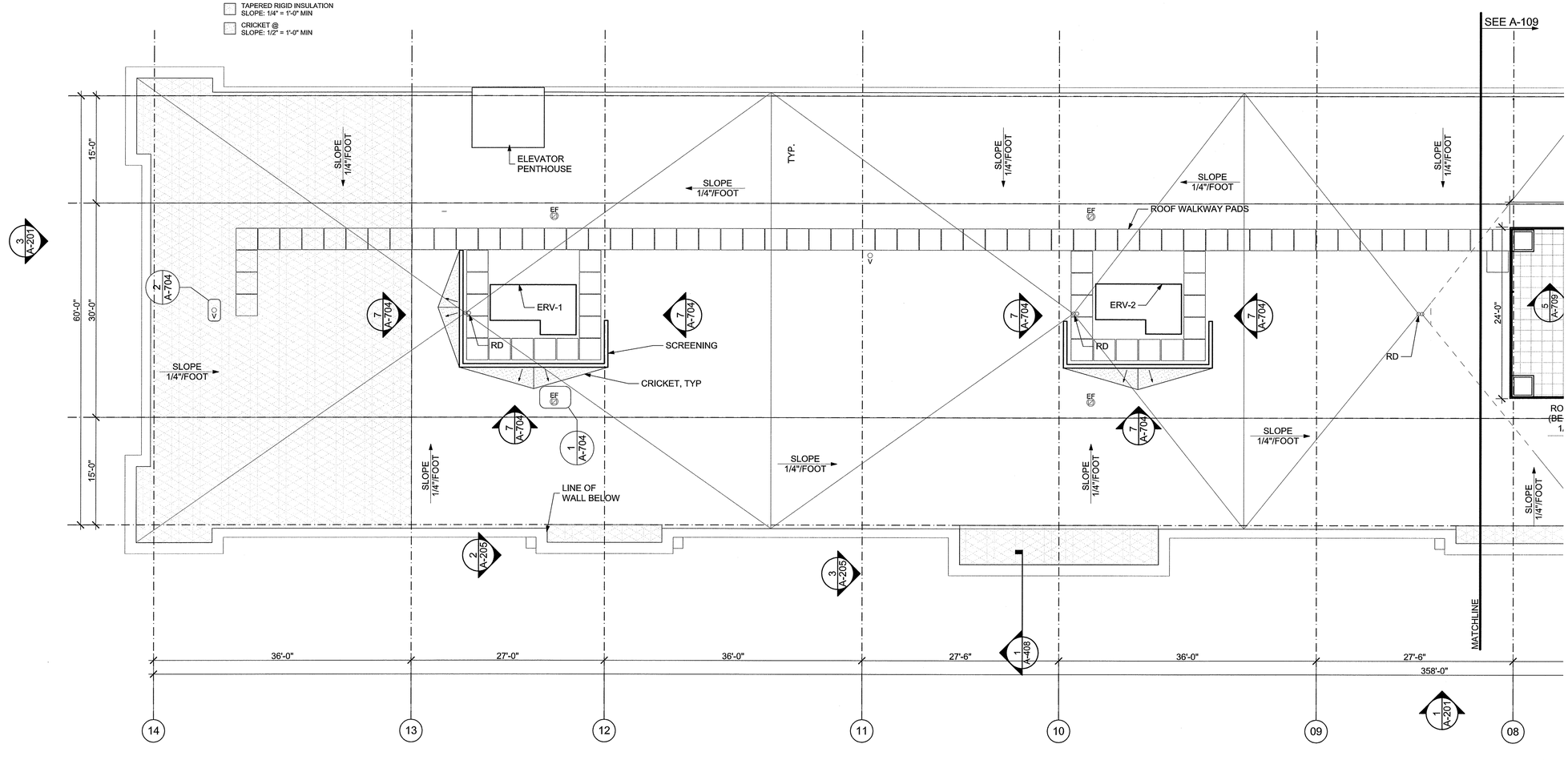

1 FOURTH FLOOR / LOWER ROOF

SCALE: 1/8" = 1'-0"

Washington Village Phase 1

20 Day Street Building B

Norwalk, CT

Trinity Washington Village Limited Partnership
&
the Norwalk Housing Authority

E-ICON ARCHITECTURE
101 SUMMER ST BOSTON MA 02110
617-451-3333 www.iconarch.com

CONSULTANT

STAMP

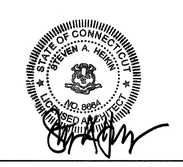

KEY PLAN

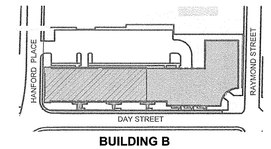

BUILDING B

MARK	DATE	DESCRIPTION
	09-19-2013	CAM/ SPECIAL PERMIT
	11-18-2013	40% CHFA
	06-13-2014	PRICING
	09-15-2014	PERMIT/ PRICING

PROJECT NO.: 21222
DRAWN BY: JR,RA,AF,GA, KH, SO
CHECKED BY:

SHEET TITLE

BUILDING B
ROOF PLAN
(NORTH WING)

A-110

9/19/2014 3:36 PM

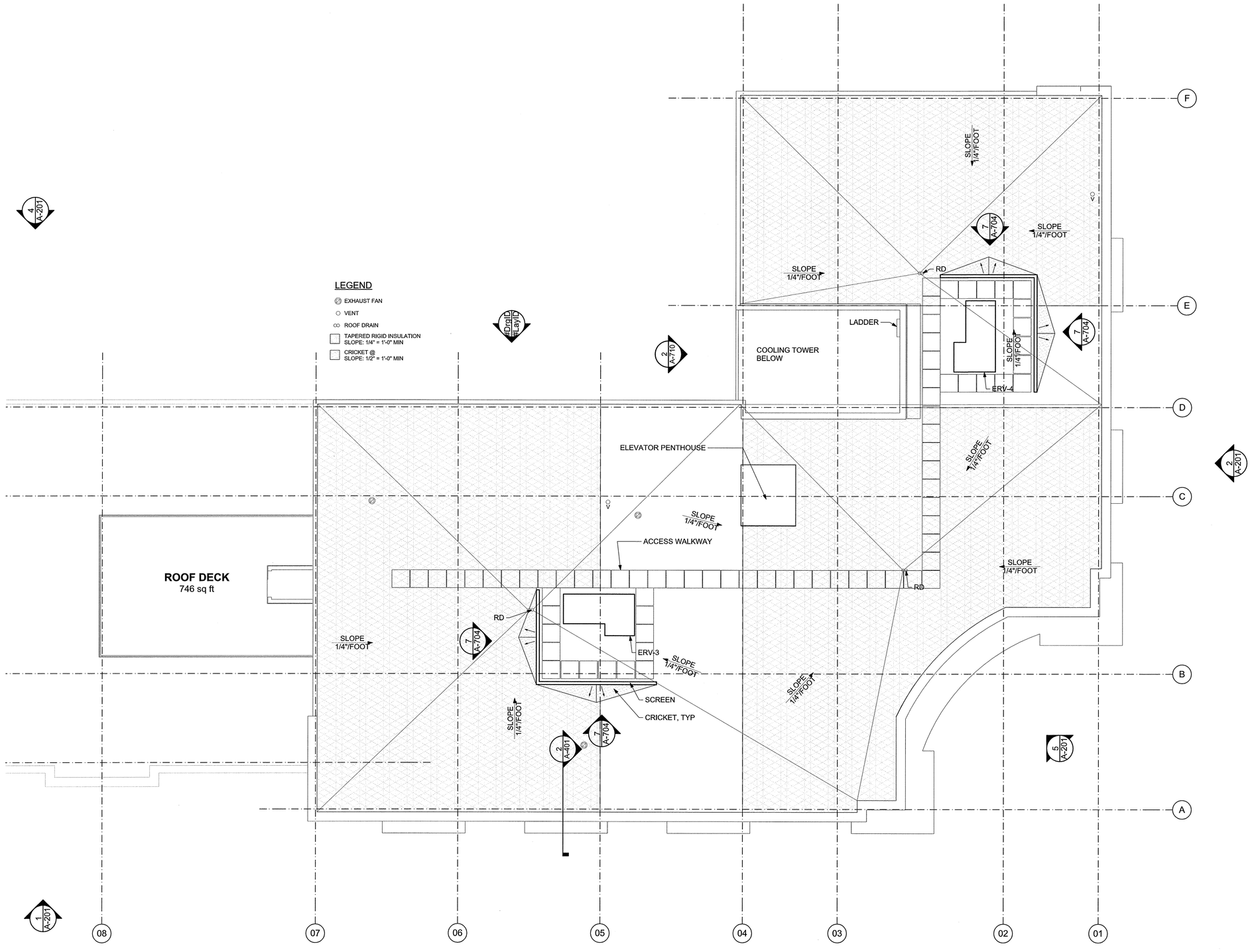

1 ROOF PLAN

SCALE: 1/8" = 1'-0"

Washington Village Phase 1

20 Day Street Building B

Norwalk, CT

Trinity Washington Village Limited Partnership
&
the Norwalk Housing Authority

ICON ARCHITECTURE
101 SUMMER ST BOSTON MA 02110
617-451-3333 www.iconarch.com

CONSULTANT

STAMP

STATE OF CONNECTICUT
ARTEMIS A. HENRY
NO. 9664
REGISTERED ARCHITECT

KEY PLAN

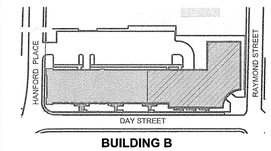

BUILDING B

MARK	DATE	DESCRIPTION
	09-15-2014	PERMIT/ PRICING
	06-13-2014	PRICING
	11-18-2013	40% CHFA
	09-19-2013	CAM/ SPECIAL PERMIT

PROJECT NO.: 21222
DRAWN BY: JR,RA,AF,GA, KH, SO
CHECKED BY:

SHEET TITLE

BUILDING B
ROOF PLAN
(SOUTH WING)

A-111

9/15/2014 3:26 PM



5 BUILDING B ELEVATION AT CORNER OF DAY & RAYMOND STREET

SCALE: 1/16" = 1'-0"

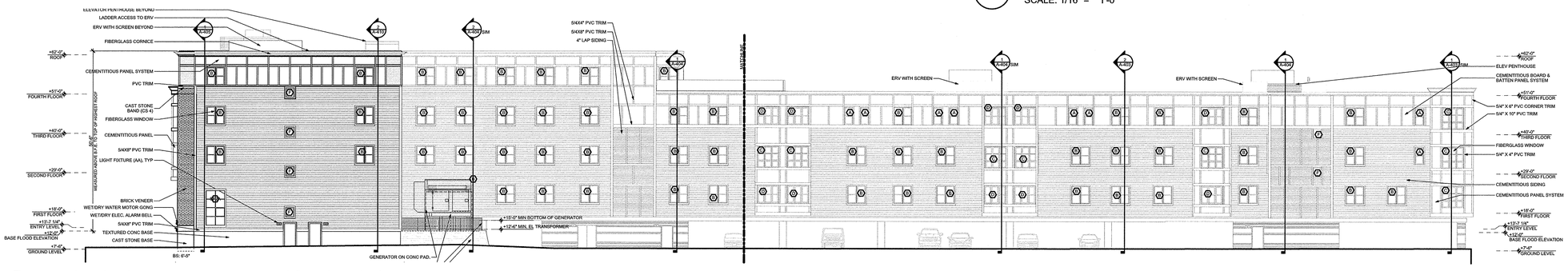

4 BUILDING B REAR ELEVATION (EAST)

SCALE: 1/16" = 1'-0"

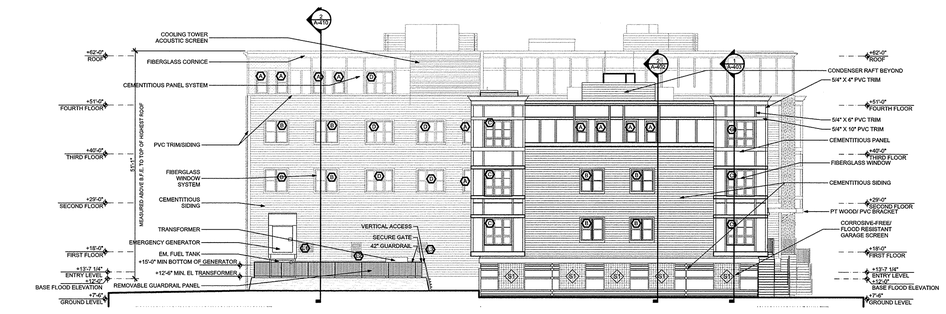

3 BUILDING B HANFORD PLACE ELEVATION (NORTH)

SCALE: 1/16" = 1'-0"

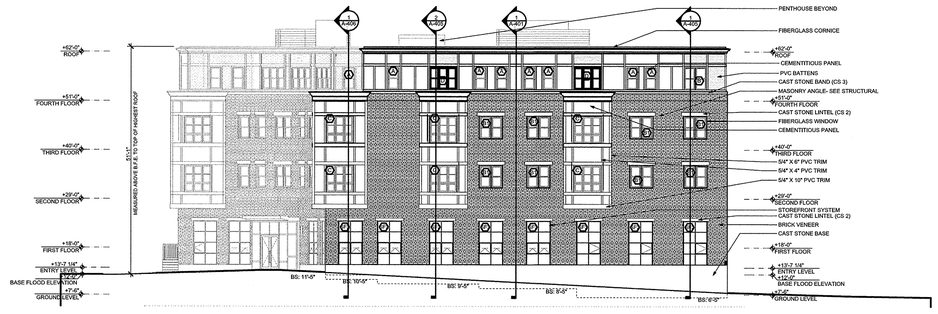

2 BUILDING B RAYMOND STREET ELEVATION (SOUTH)

SCALE: 1/16" = 1'-0"

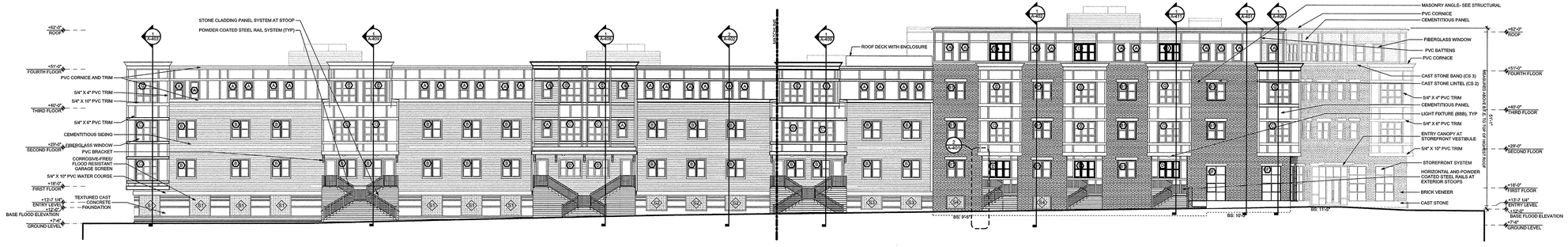

1 BUILDING B DAY STREET ELEVATION (WEST)

SCALE: 1/16" = 1'-0"

Washington Village Phase 1

20 Day Street Building B

Norwalk, CT

Trinity Washington Village Limited Partnership
&
the Norwalk Housing Authority

E-ICON ARCHITECTURE
101 SUMMER ST BOSTON MA 02110
617-451-3333 www.iconarch.com

CONSULTANT

STAMP

STATE OF CONNECTICUT
STEVEN A. HEIMLICH
NO. 26814
REGISTERED ARCHITECT

KEY PLAN

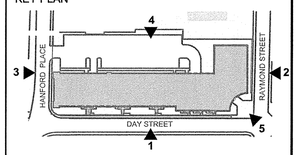

MARK	DATE	DESCRIPTION
	09-15-2014	PERMIT/ PRICING
	06-13-2014	PRICING
	11-18-2013	40% CHFA
	09-19-2013	CAM/ SPECIAL PERMIT

PROJECT NO.: 21222
DRAWN BY: AF,GA, KH
CHECKED BY:

SHEET TITLE

BUILDING B ELEVATIONS

A-201

5/19/2014 3:08 PM

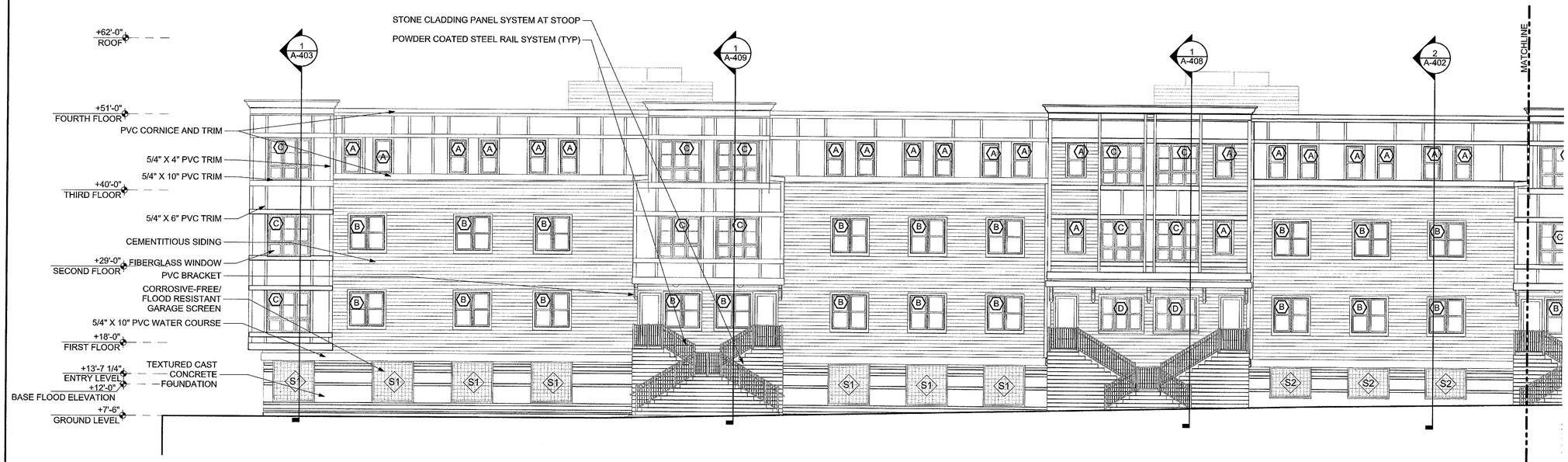

2 BUILDING B DAY STREET ELEVATION (WEST)

SCALE: 1/8" = 1'-0"



1 BUILDING B DAY STREET ELEVATION (WEST)

SCALE: 1/8" = 1'-0"

Washington Village Phase 1

20 Day Street Building B

Norwalk, CT

Trinity Washington Village Limited Partnership
&
the Norwalk Housing Authority

E-ICON ARCHITECTURE
101 SUMMER ST BOSTON MA 02110
617-451-3333 www.iconarch.com

CONSULTANT

STAMP



KEY PLAN

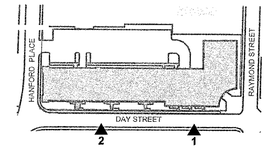

MARK	DATE	DESCRIPTION
	09-15-2014	PERMIT/ PRICING
	06-13-2014	PRICING
	11-18-2013	40% CHFA
	09-19-2013	CAM/ SPECIAL PERMIT

PROJECT NO.: 21222
DRAWN BY: AF,GA, KH
CHECKED BY:

SHEET TITLE

BUILDING B DAY STREET ELEVATION

A-202

9/18/2014 3:28 PM

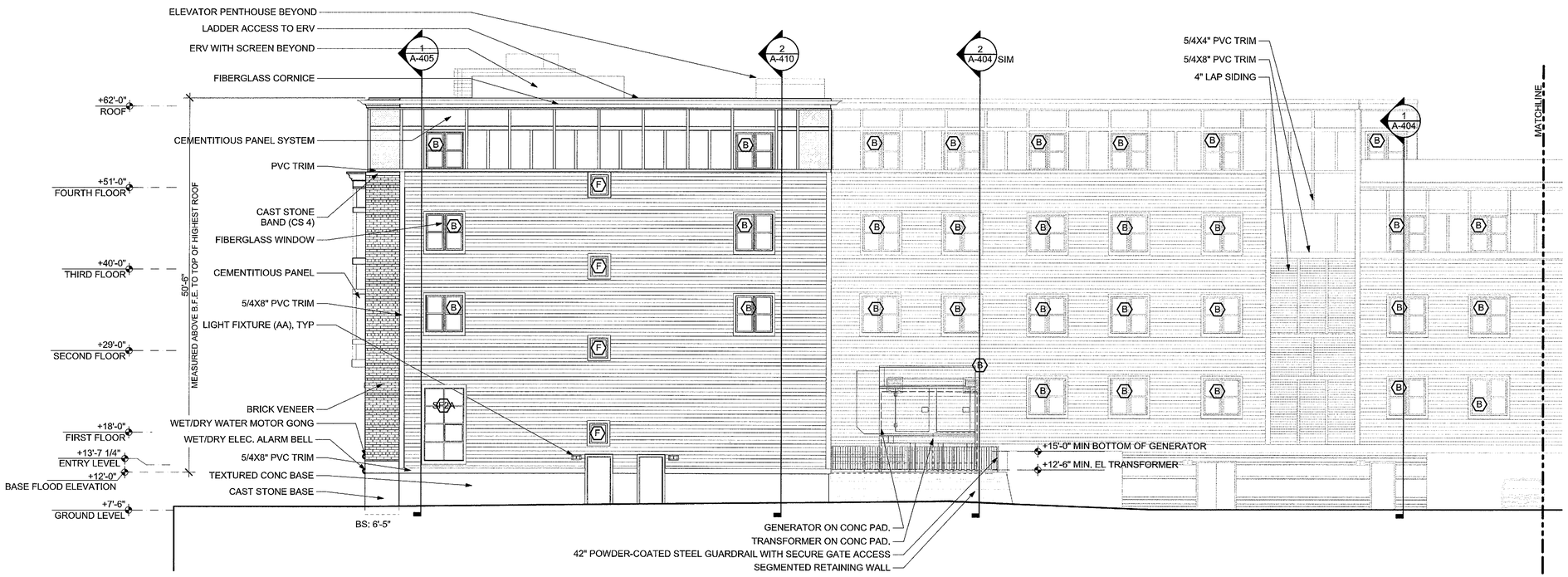

2 BUILDING B REAR ELEVATION (EAST)

SCALE: 1/8" = 1'-0"

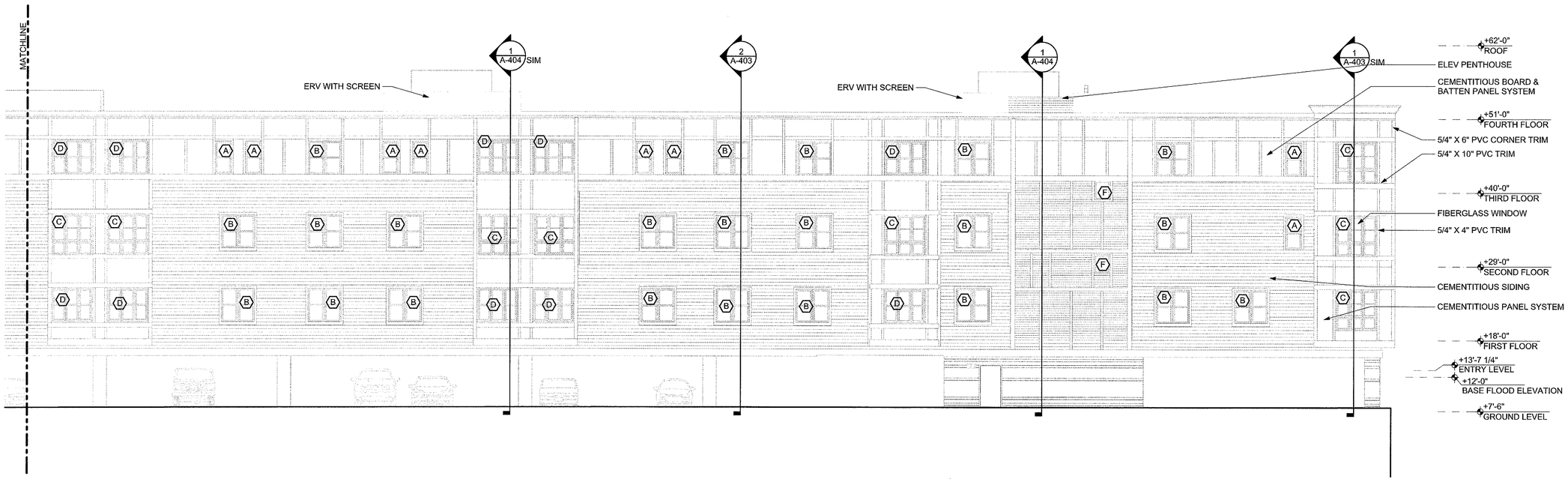

1 BUILDING B REAR ELEVATION (EAST)

SCALE: 1/8" = 1'-0"

Washington Village Phase 1

20 Day Street Building B

Norwalk, CT

Trinity Washington Village Limited Partnership
&
the Norwalk Housing Authority

E-ICON ARCHITECTURE
101 SUMMER ST BOSTON MA 02110
617-451-3333 www.iconarch.com

CONSULTANT

STAMP

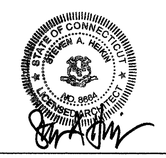

KEY PLAN

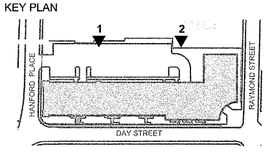

MARK	DATE	DESCRIPTION
	09-15-2014	PERMIT/ PRICING
	06-13-2014	PRICING
	11-18-2013	40% CHFA
	09-19-2013	CAM/ SPECIAL PERMIT

PROJECT NO.: 21222
DRAWN BY: AF,GA, KH
CHECKED BY:

SHEET TITLE

BUILDING B REAR ELEVATION

A-203

9/17/2014 3:29 PM

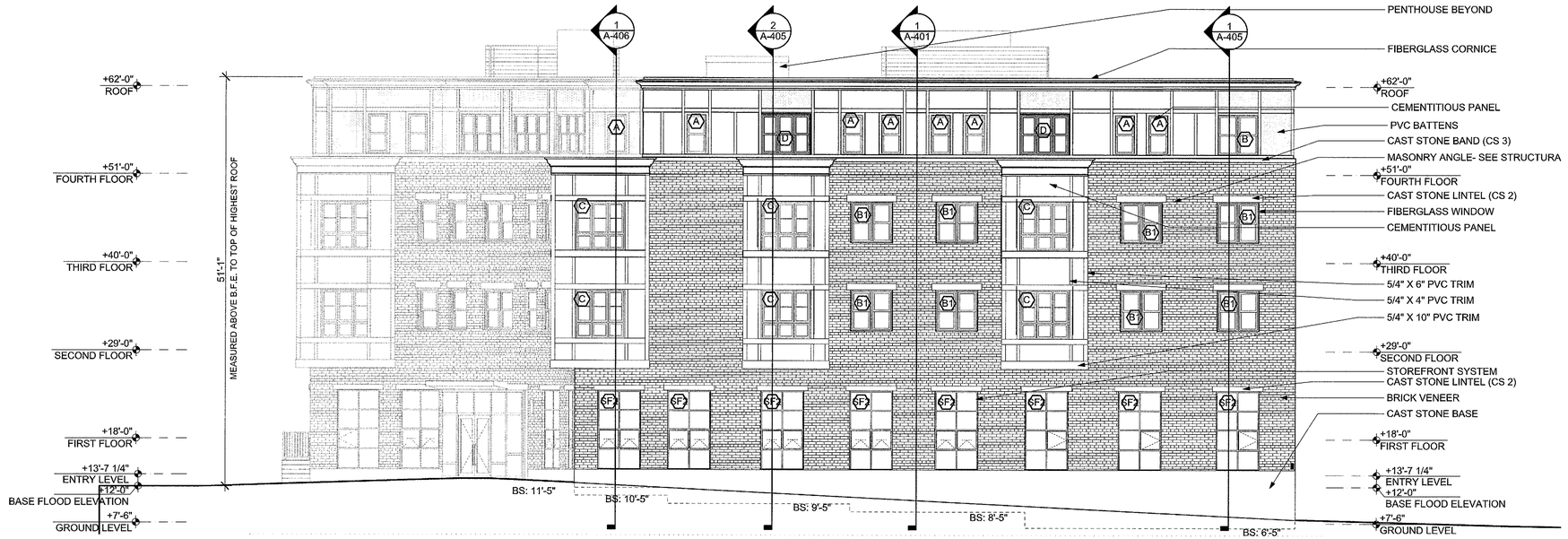

2 BUILDING B RAYMOND STREET ELEVATION (SOUTH)

SCALE: 1/8" = 1'-0"

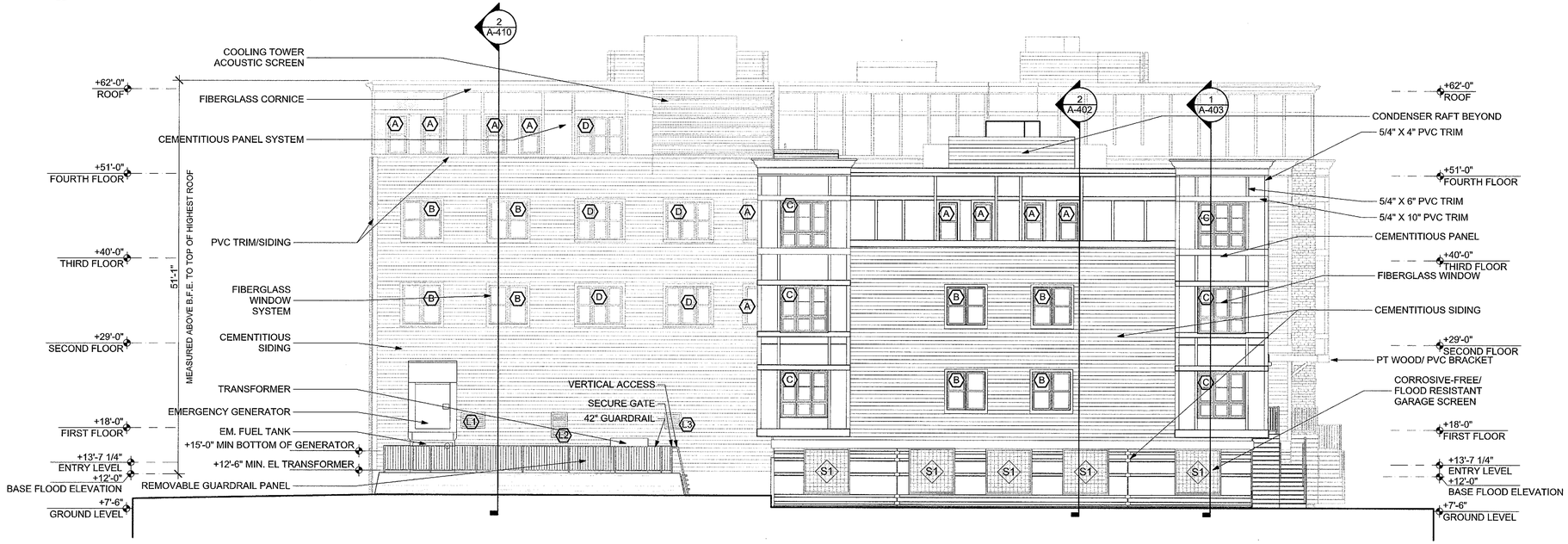

1 BUILDING B HANFORD PLACE ELEVATION (NORTH)

SCALE: 1/8" = 1'-0"

Washington Village Phase 1

20 Day Street Building B

Norwalk, CT

Trinity Washington Village Limited Partnership
&
the Norwalk Housing Authority

E-ICON ARCHITECTURE
101 SUMMER ST BOSTON MA 02110
617-451-3333 www.iconarch.com

CONSULTANT

STAMP



KEY PLAN

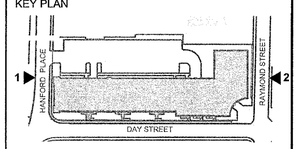

MARK	DATE	DESCRIPTION
	09-15-2014	PERMIT/ PRICING
	06-13-2014	PRICING
	11-18-2013	40% CHFA
	09-19-2013	CAM/ SPECIAL PERMIT

PROJECT NO.: 21222
DRAWN BY: AF,GA, KH
CHECKED BY:

SHEET TITLE

BUILDING B RAYMOND AND HANFORD PLACE ELEVATION

A-204

9/18/2014 9:28:28 PM

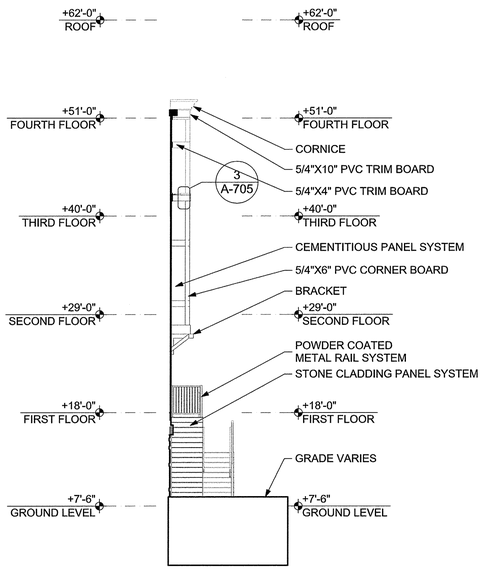

3 BUILDING B SIDE OF BAY

SCALE: 1/8" = 1'-0"

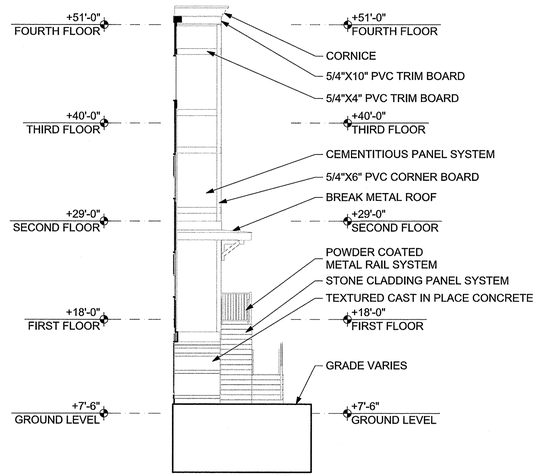

2 BUILDING B SIDE OF LARGE BAY

SCALE: 1/8" = 1'-0"

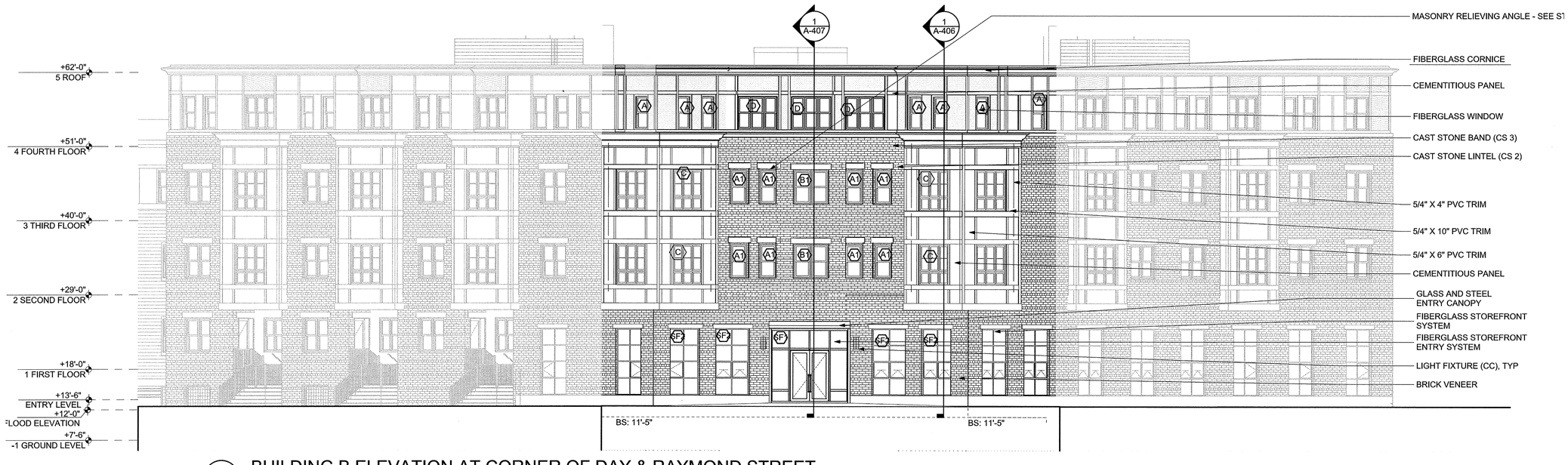

1 BUILDING B ELEVATION AT CORNER OF DAY & RAYMOND STREET

SCALE: 1/8" = 1'-0"

Washington Village Phase 1

20 Day Street Building B

Norwalk, CT

Trinity Washington Village Limited Partnership
&
the Norwalk Housing Authority

ICON ARCHITECTURE
101 SUMMER ST BOSTON MA 02110
617-451-3333 www.iconarch.com

CONSULTANT

STAMP



KEY PLAN

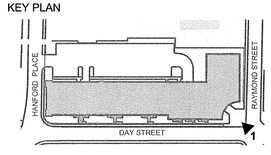

MARK	DATE	DESCRIPTION
	09-15-2014	PERMIT/ PRICING
	06-13-2014	PRICING
	11-18-2013	40% CHFA
	09-19-2013	CAM/ SPECIAL PERMIT

PROJECT NO.: 21222
DRAWN BY: AF,GA, KH
CHECKED BY:

SHEET TITLE

BUILDING B ENTRY ELEVATION

A-205

3/18/2014 3:28 PM

GENERAL NOTES:

1 HR SEPERATION

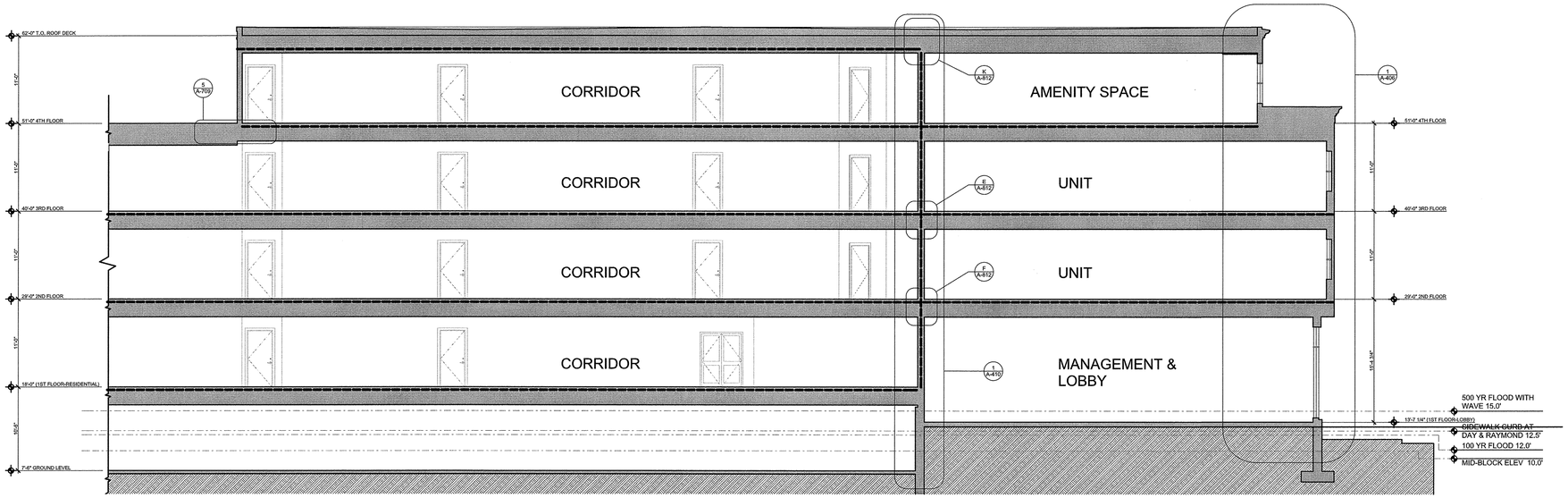

2 BUILDING B SECTION

SCALE: 1/8" = 1'-0"

0 4" 8" 16"

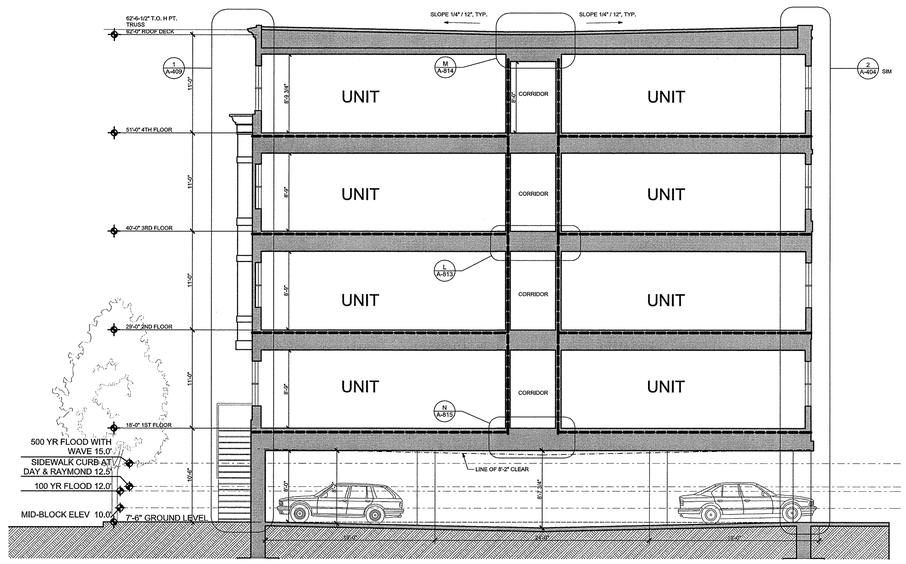

1 BUILDING B SECTION

SCALE: 1/8" = 1'-0"

0 4" 8" 16"

Washington Village Phase 1

20 Day Street Building B

Norwalk, CT

Trinity Washington Village Limited Partnership
&
the Norwalk Housing Authority

E-ICON ARCHITECTURE
101 SUMMER ST BOSTON MA 02110
617-451-3333 www.iconarch.com

CONSULTANT

STAMP

STATE OF CONNECTICUT · KAREEN A. HORN · NO. 8664 · REGISTERED ARCHITECT

MARK	DATE	DESCRIPTION
	09-15-2014	PERMIT/ PRICING
	06-13-2014	PRICING
	11-18-2013	40% CHFA
	09-19-2013	CAM/ SPECIAL PERMIT

PROJECT NO.: 21222
DRAWN BY: AF, SW, BD
CHECKED BY:

SHEET TITLE

BUILDING B SECTION

A-301

9/19/2013 2:09 PM

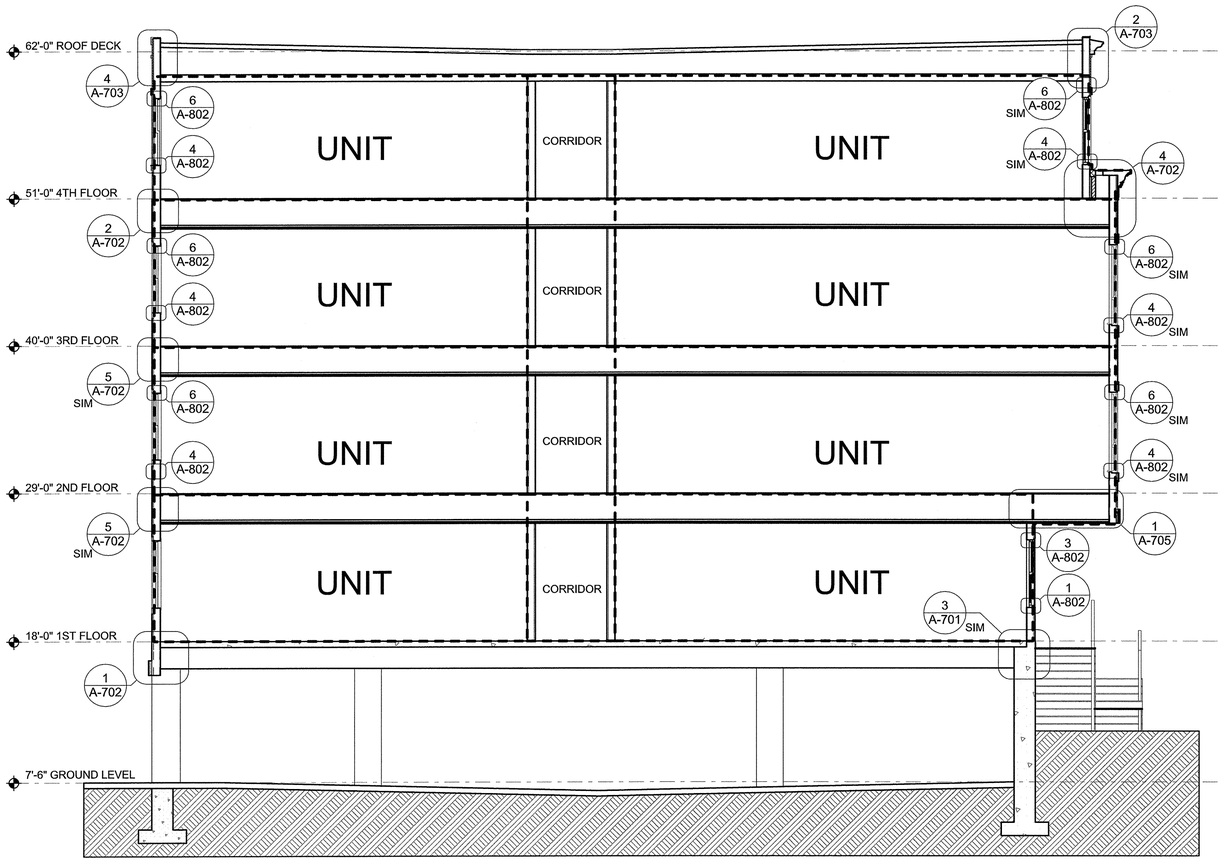

2 BUILDING B COMPARTMENTALIZATION SECTION
SCALE: 3/16" = 1'-0"

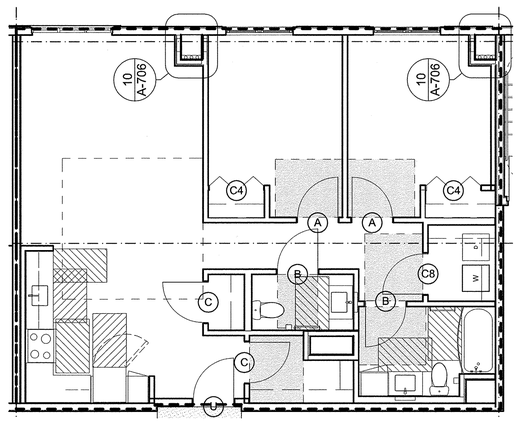

1 BUILDING B TYP. UNIT PLAN
SCALE: 3/16" = 1'-0"

Washington Village Phase 1

20 Day Street Building B

Norwalk, CT

Trinity Washington Village Limited Partnership
&
the Norwalk Housing Authority

E-ICON ARCHITECTURE
101 SUMMER ST BOSTON MA 02110
617-451-3333 www.iconarch.com

CONSULTANT

STAMP

MARK	DATE	DESCRIPTION
	09-15-2014	PERMIT/ PRICING
	06-13-2014	PRICING
	11-18-2013	40% CHFA
	09-19-2013	CAM/ SPECIAL PERMIT

PROJECT NO.: 21222
DRAWN BY: BD, AS
CHECKED BY:

SHEET TITLE

COMPARTMENT - ALIZATION PLAN

A-302

9/18/2014 3:28 PM

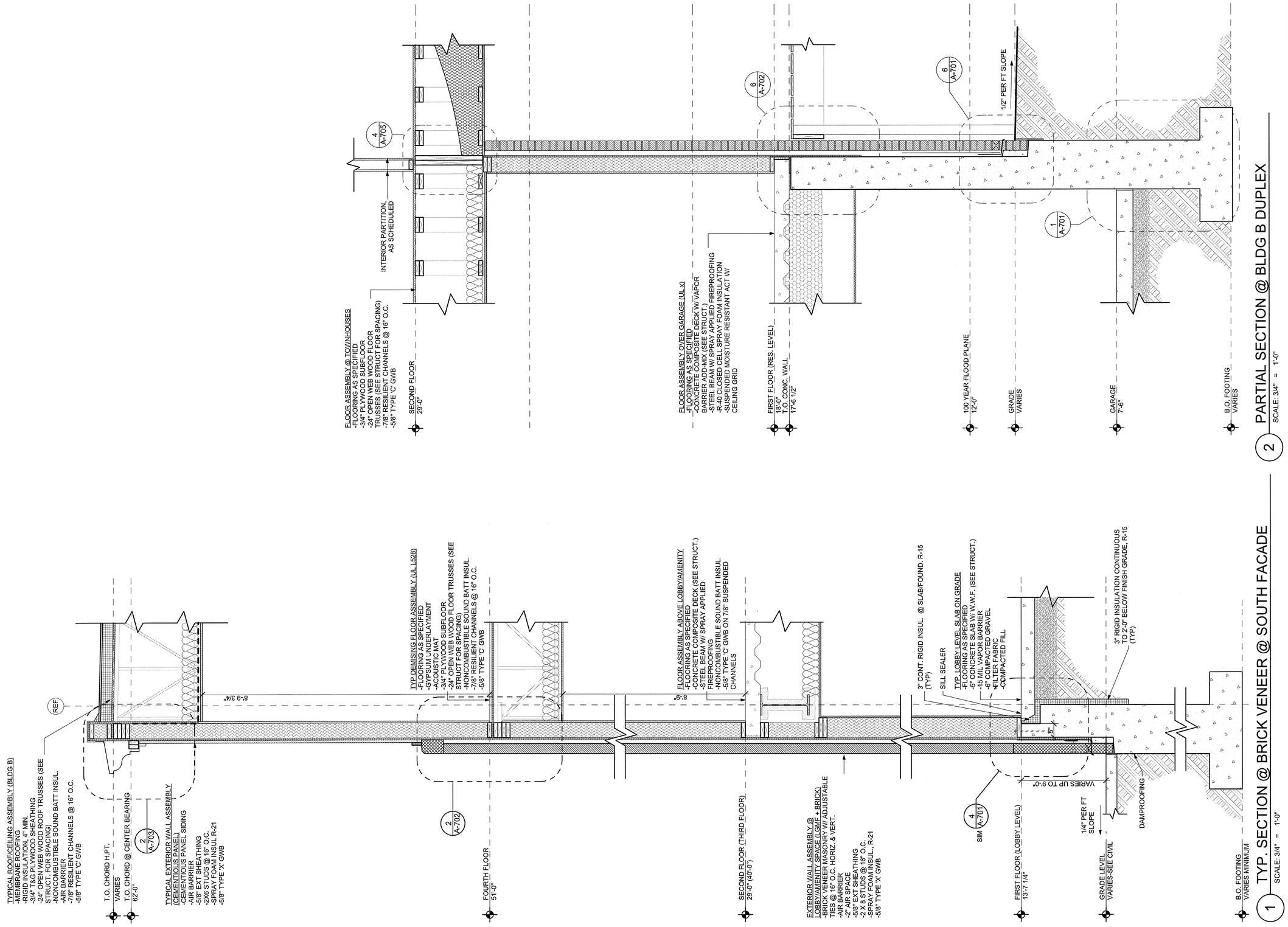

Washington Village Phase 1

20 Day Street Building B

Norwalk, CT

Trinity Washington Village Limited Partnership
&
the Norwalk Housing Authority

E-ICON ARCHITECTURE
101 SUMMER ST BOSTON MA 02110
617-451-3333 www.iconarch.com

CONSULTANT

STAMP

MARK	DATE	DESCRIPTION
	09-15-2014	PERMIT/ PRICING
	06-13-2014	PRICING
	11-18-2013	40% CHFA
	09-19-2013	CAM/ SPECIAL PERMIT

PROJECT NO.: 21222
DRAWN BY: AF, BD, SW
CHECKED BY:

SHEET TITLE

WALL SECTIONS, BUILDING B

A-401

9/18/2014 3:29 PM

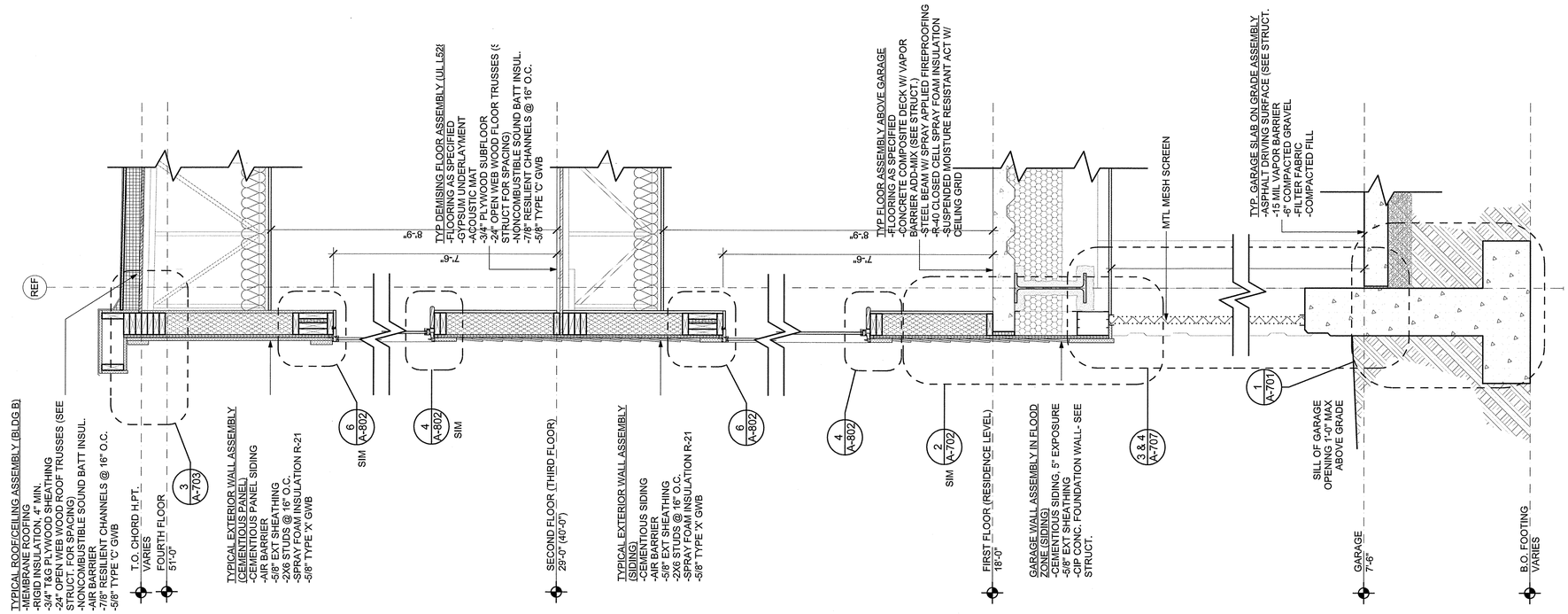

2 TYPICAL SECTION @ BLDG B 3 STORY RES.
SCALE: 3/4" = 1'-0"

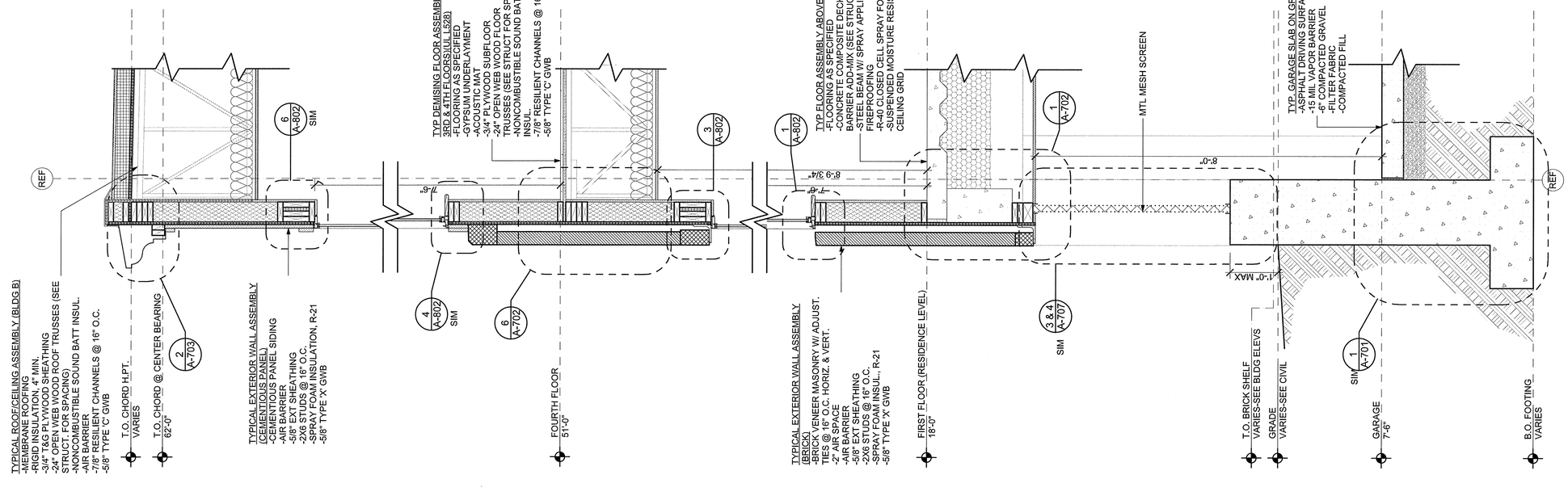

1 TYPICAL SECTION @ BLDG B TOWNHOUSE
SCALE: 3/4" = 1'-0"

Washington Village Phase 1

20 Day Street Building B

Norwalk, CT

Trinity Washington Village Limited Partnership
&
the Norwalk Housing Authority

ICON ARCHITECTURE
101 SUMMER ST BOSTON MA 02110
617-451-3333 www.iconarch.com

CONSULTANT

STAMP

STATE OF CONNECTICUT · STEVEN A. HEGEIN · REG. NO. 26858 · REGISTERED ARCHITECT

MARK	DATE	DESCRIPTION
	09-15-2014	PERMIT/ PRICING
	06-13-2014	PRICING
	11-18-2013	40% CHFA
	09-19-2013	CAM/ SPECIAL PERMIT

PROJECT NO.: 21222
DRAWN BY: AF, SO, BD, SW
CHECKED BY:

SHEET TITLE

WALL SECTIONS, BUILDING B

A-402

9/19/2014 3:09 PM

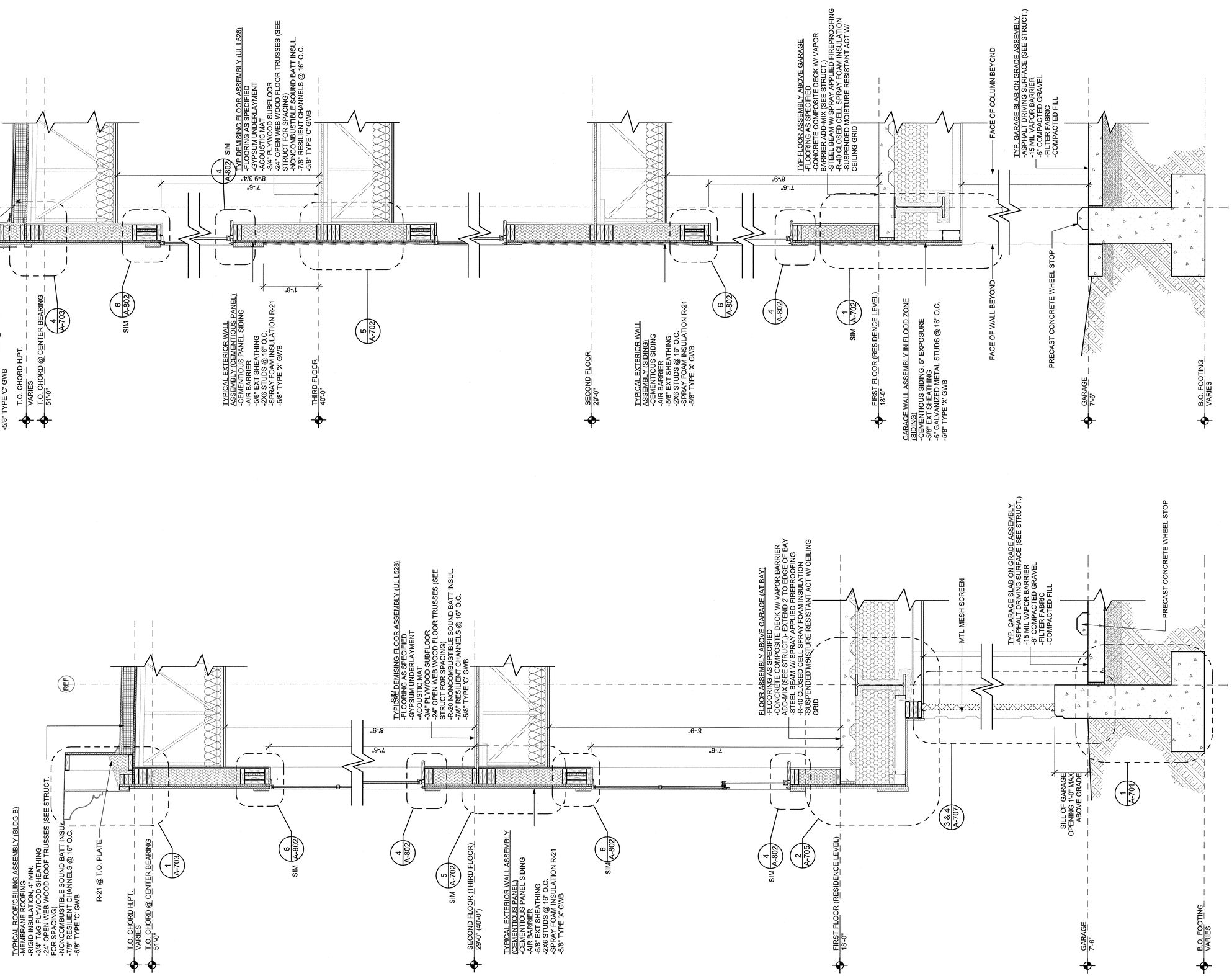

Washington Village Phase 1

20 Day Street Building B

Norwalk, CT

Trinity Washington Village Limited Partnership
&
the Norwalk Housing Authority

ICON ARCHITECTURE
101 SUMMER ST BOSTON MA 02110
617-451-3333 www.iconarch.com

CONSULTANT

STAMP

STATE OF CONNECTICUT · JOSEPH A. MORIN · NO. 8995 · REGISTERED ARCHITECT

MARK	DATE	DESCRIPTION
	09-15-2014	PERMIT/ PRICING
	06-13-2014	PRICING
	11-18-2013	40% CHFA
	09-19-2013	CAM/ SPECIAL PERMIT

PROJECT NO.: 21222
DRAWN BY: AF, SO, BD, SW
CHECKED BY:

SHEET TITLE

WALL SECTIONS, BUILDING B

A-403

9/19/2013 3:29 PM

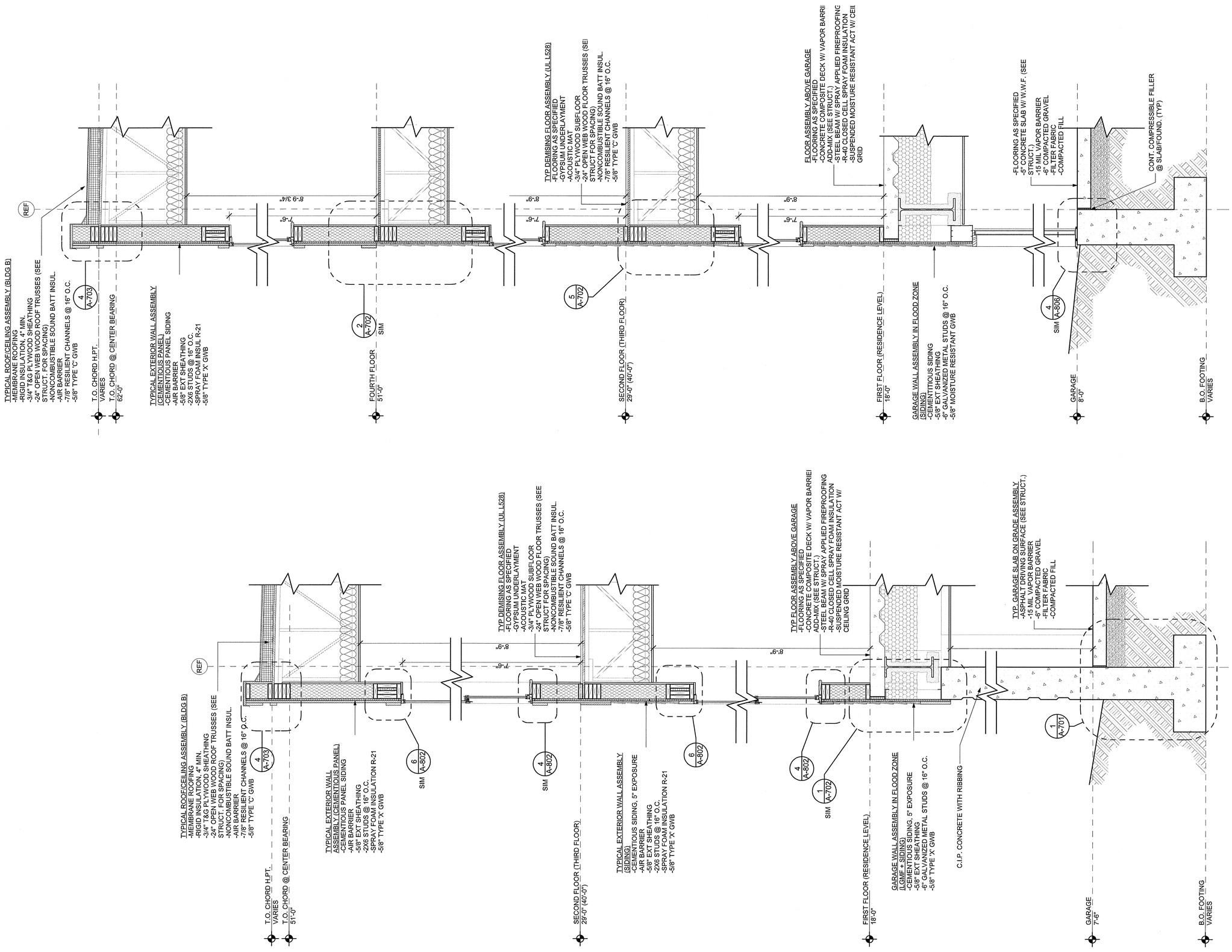

1 TYPICAL SECTION @ REAR MATERIAL CHANGE

SCALE: 3/4" = 1'-0"

2 TYPICAL SECTION @ 4 STORY REAR WALL

SCALE: 3/4" = 1'-0"

Washington Village Phase 1

20 Day Street Building B

Norwalk, CT

Trinity Washington Village Limited Partnership
&
the Norwalk Housing Authority

E-ICON ARCHITECTURE
101 SUMMER ST BOSTON MA 02110
617-451-3333 www.iconarch.com

CONSULTANT

STAMP

MARK	DATE	DESCRIPTION
	09-15-2014	PERMIT/ PRICING
	06-13-2014	PRICING
	11-18-2013	40% CHFA
	09-19-2013	CAM/ SPECIAL PERMIT

PROJECT NO.: 21222
DRAWN BY: AF, SO, BD, SW
CHECKED BY:

SHEET TITLE

WALL SECTIONS, BUILDING B

A-404

3/19/2014 3:59 PM

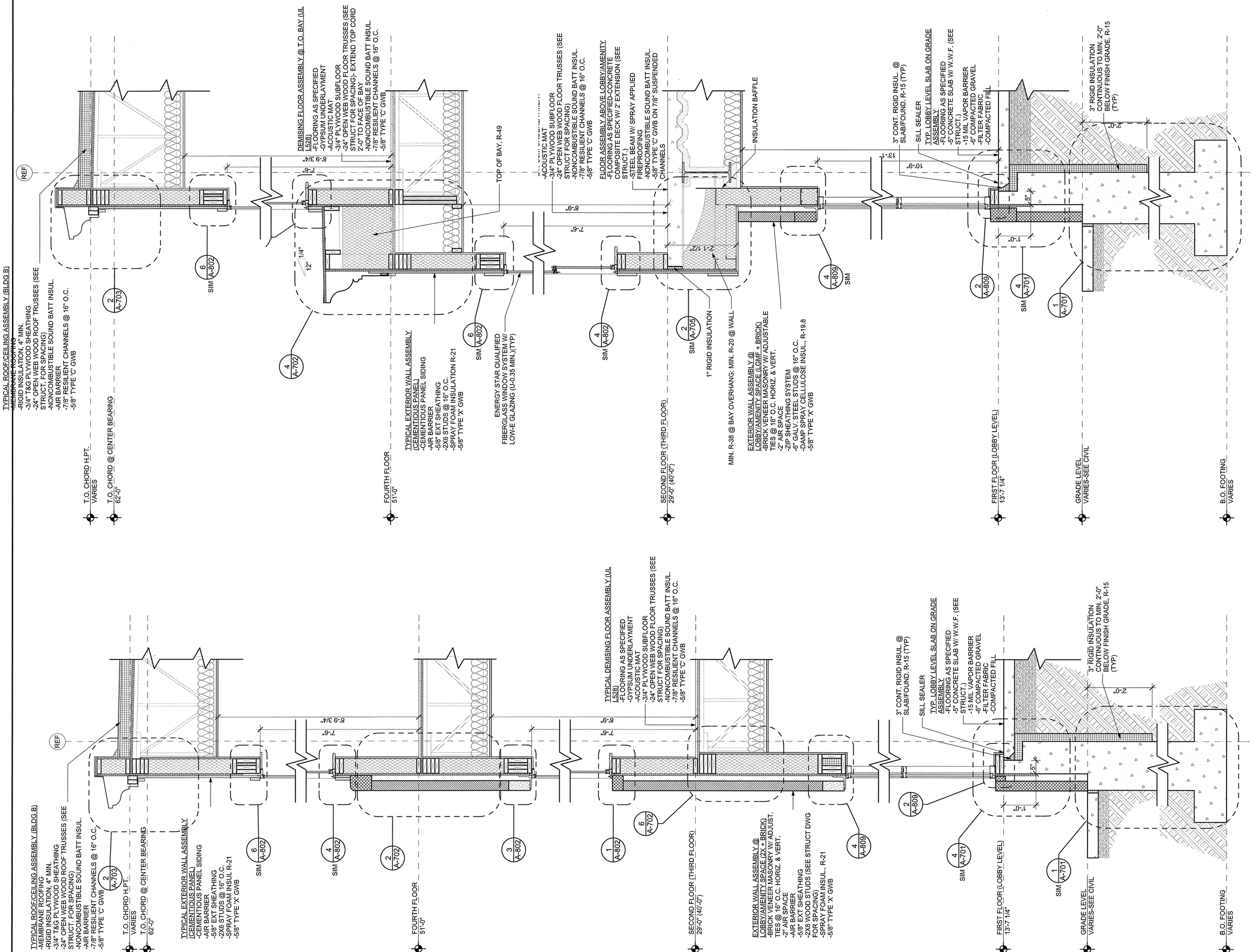

1 TYPICAL SECTION @ BLDG B STOREFRONT (BRICK)
SCALE: 3/4" = 1'-0"

2 BAY WITHOUT CANOPY @ 4 STORY
SCALE: 3/4" = 1'-0"

Washington Village Phase 1

20 Day Street Building B

Norwalk, CT

Trinity Washington Village Limited Partnership
&
the Norwalk Housing Authority

ICON ARCHITECTURE
101 SUMMER ST BOSTON MA 02110
617-451-3333 www.iconarch.com

CONSULTANT

STAMP

STATE OF CONNECTICUT · STEVEN A. HEIMAN · NO. 8884 · LICENSED ARCHITECT

MARK	DATE	DESCRIPTION
	09-15-2014	PERMIT/ PRICING
	06-13-2014	PRICING
	11-18-2013	40% CHFA
	09-19-2013	CAM/ SPECIAL PERMIT

PROJECT NO.: 21222
DRAWN BY: AF, BD, SW
CHECKED BY:

SHEET TITLE

WALL SECTIONS, BUILDING B

A-405

9/19/2013 3:39 PM

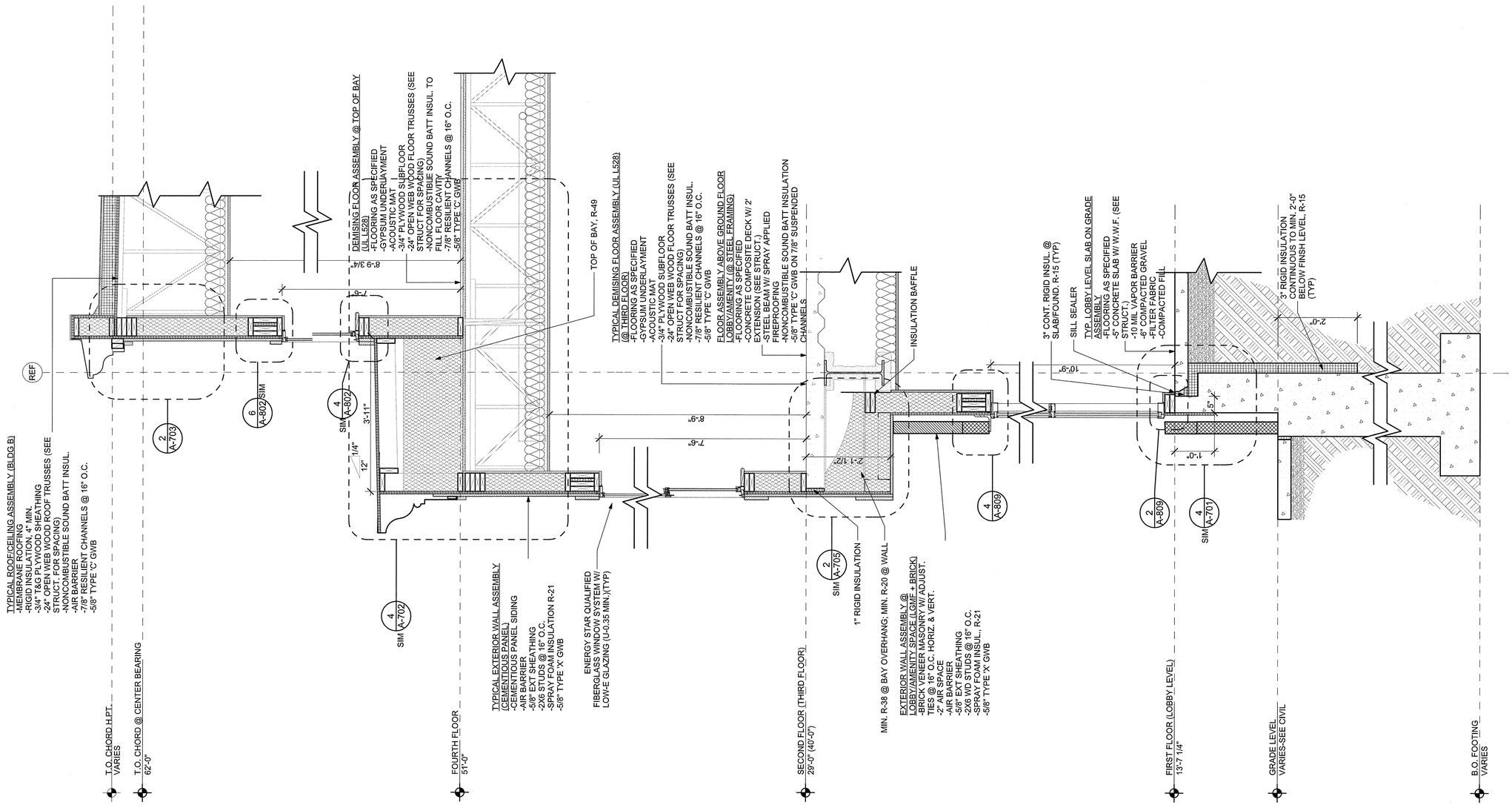

1 BAY @ BLDG B ENTRY/ARC
SCALE: 3/4" = 1'-0"

Washington Village Phase 1

20 Day Street Building B

Norwalk, CT

Trinity Washington Village Limited Partnership
&
the Norwalk Housing Authority

E-ICON ARCHITECTURE
101 SUMMER ST BOSTON MA 02110
617-451-3333 www.iconarch.com

CONSULTANT

STAMP

MARK	DATE	DESCRIPTION
	09-15-2014	PERMIT/ PRICING
	06-13-2014	PRICING
	11-18-2013	40% CHFA
	09-19-2013	CAM/ SPECIAL PERMIT

PROJECT NO.: 21222
DRAWN BY: AF, BD, SW
CHECKED BY:

SHEET TITLE

WALL SECTIONS, BUILDING B

A-406

9/18/2014 3:29 PM

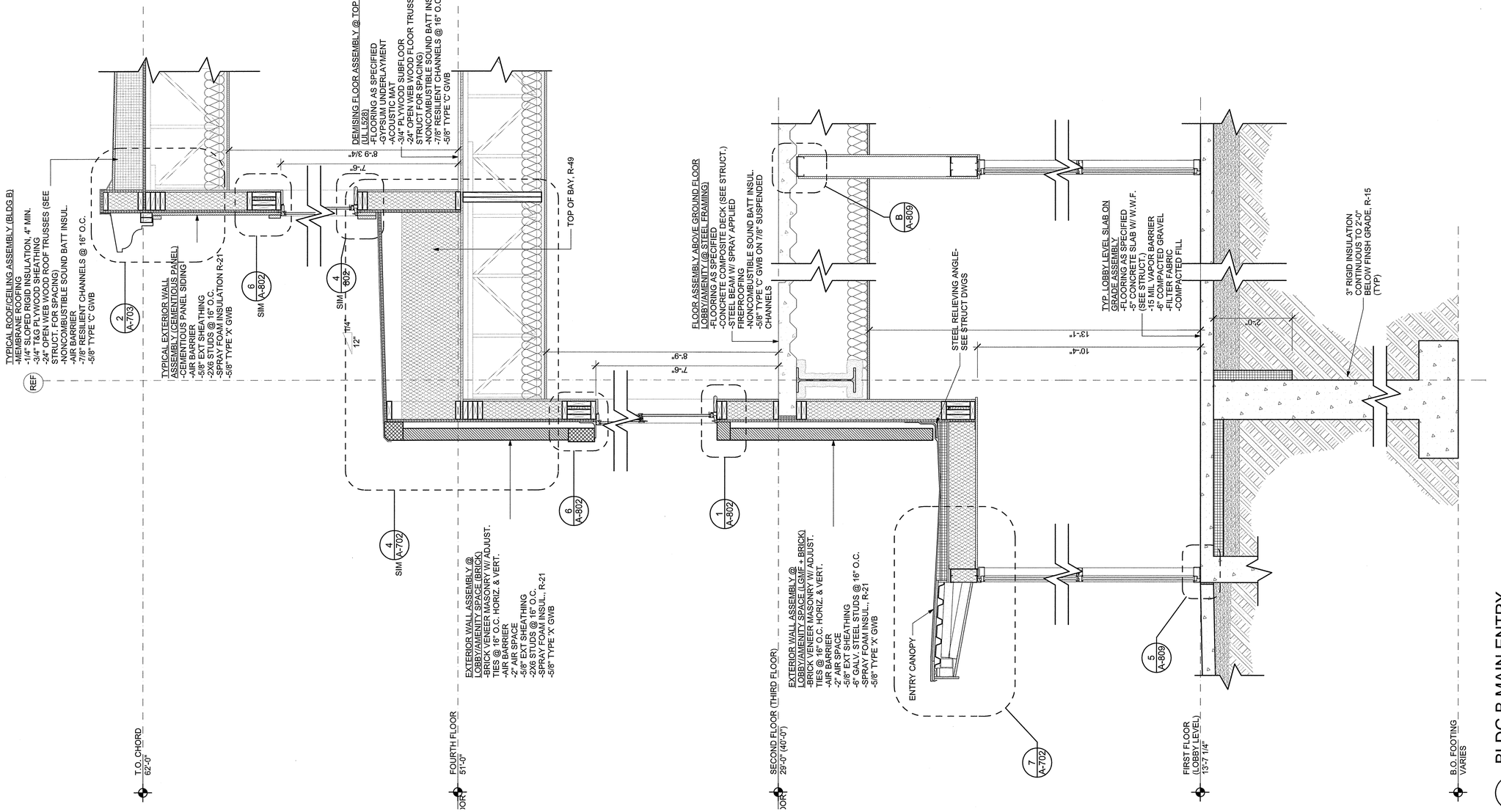

1 BLDG B MAIN ENTRY
SCALE: 3/4" = 1'-0"

Washington Village Phase 1

20 Day Street Building B

Norwalk, CT

Trinity Washington Village Limited Partnership
&
the Norwalk Housing Authority

E-ICON ARCHITECTURE
101 SUMMER ST BOSTON MA 02110
617-451-3333 www.iconarch.com

CONSULTANT

STAMP

STATE OF CONNECTICUT
STEPHEN A. HEIDEN
NO. 26691
REGISTERED ARCHITECT

MARK	DATE	DESCRIPTION
	09-15-2014	PERMIT/ PRICING
	06-13-2014	PRICING
	11-18-2013	40% CHFA
	09-19-2013	CAM/ SPECIAL PERMIT

PROJECT NO.: 21222
DRAWN BY: AF, BD, SW
CHECKED BY:

SHEET TITLE

WALL SECTIONS, BUILDING B

A-407

4/14/2014 3:26 PM

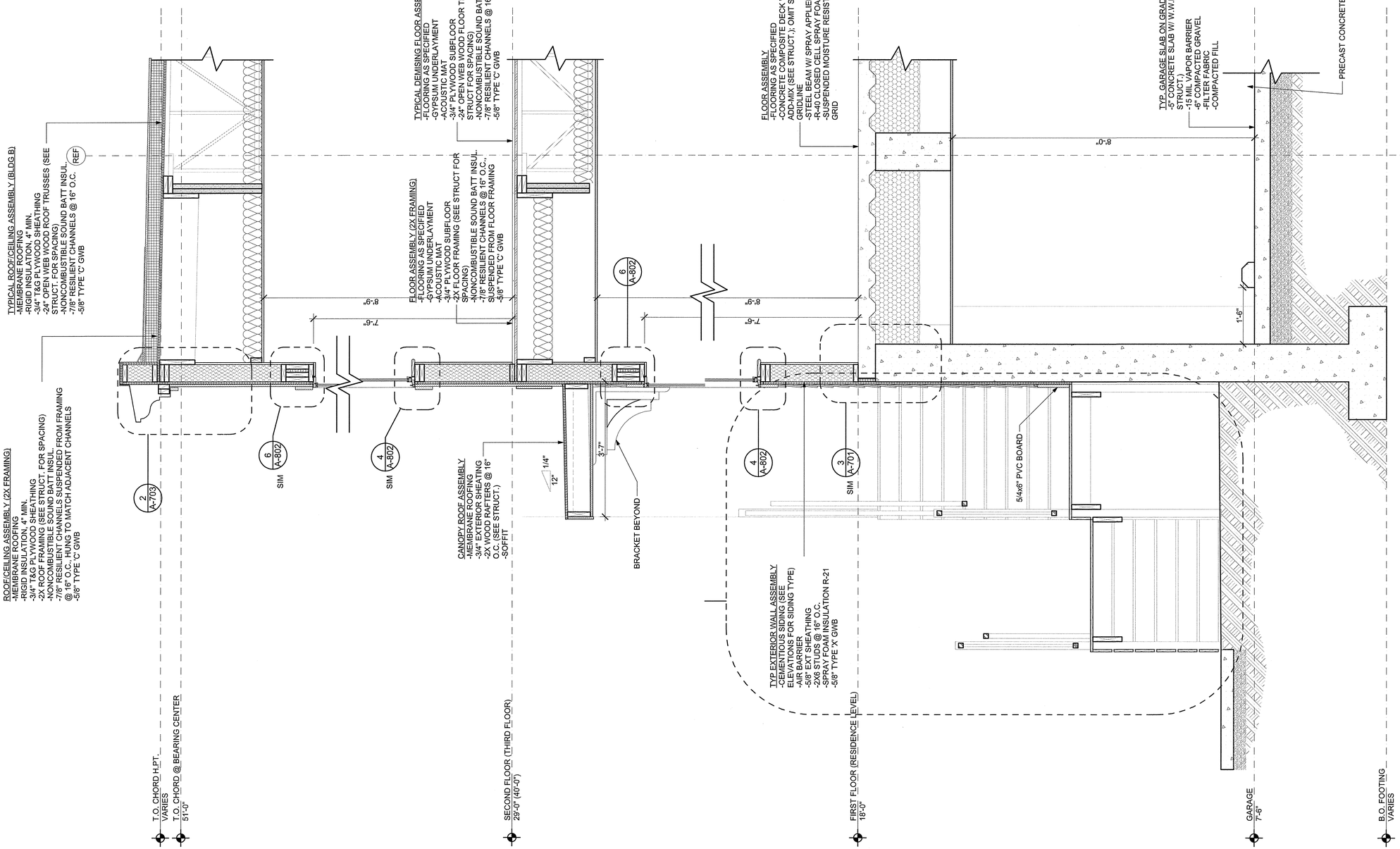

1 SECTION @ EXTENDED BAY
SCALE: 3/4" = 1'-0"

Washington Village Phase 1

20 Day Street Building B

Norwalk, CT

Trinity Washington Village Limited Partnership
&
the Norwalk Housing Authority

E-ICON ARCHITECTURE
101 SUMMER ST BOSTON MA 02110
617-451-3333 www.iconarch.com

CONSULTANT

STAMP

STATE OF CONNECTICUT
STEVEN A. HEIMAN
NO. 9884
REGISTERED ARCHITECT

MARK	DATE	DESCRIPTION
	09-15-2014	PERMIT/ PRICING
	06-13-2014	PRICING
	11-18-2013	40% CHFA
	09-19-2013	CAM/ SPECIAL PERMIT

PROJECT NO.: 21222
DRAWN BY: AF, BD, SW
CHECKED BY:

SHEET TITLE

WALL SECTIONS, BUILDING B

A-408

4/14/2014 3:29 PM

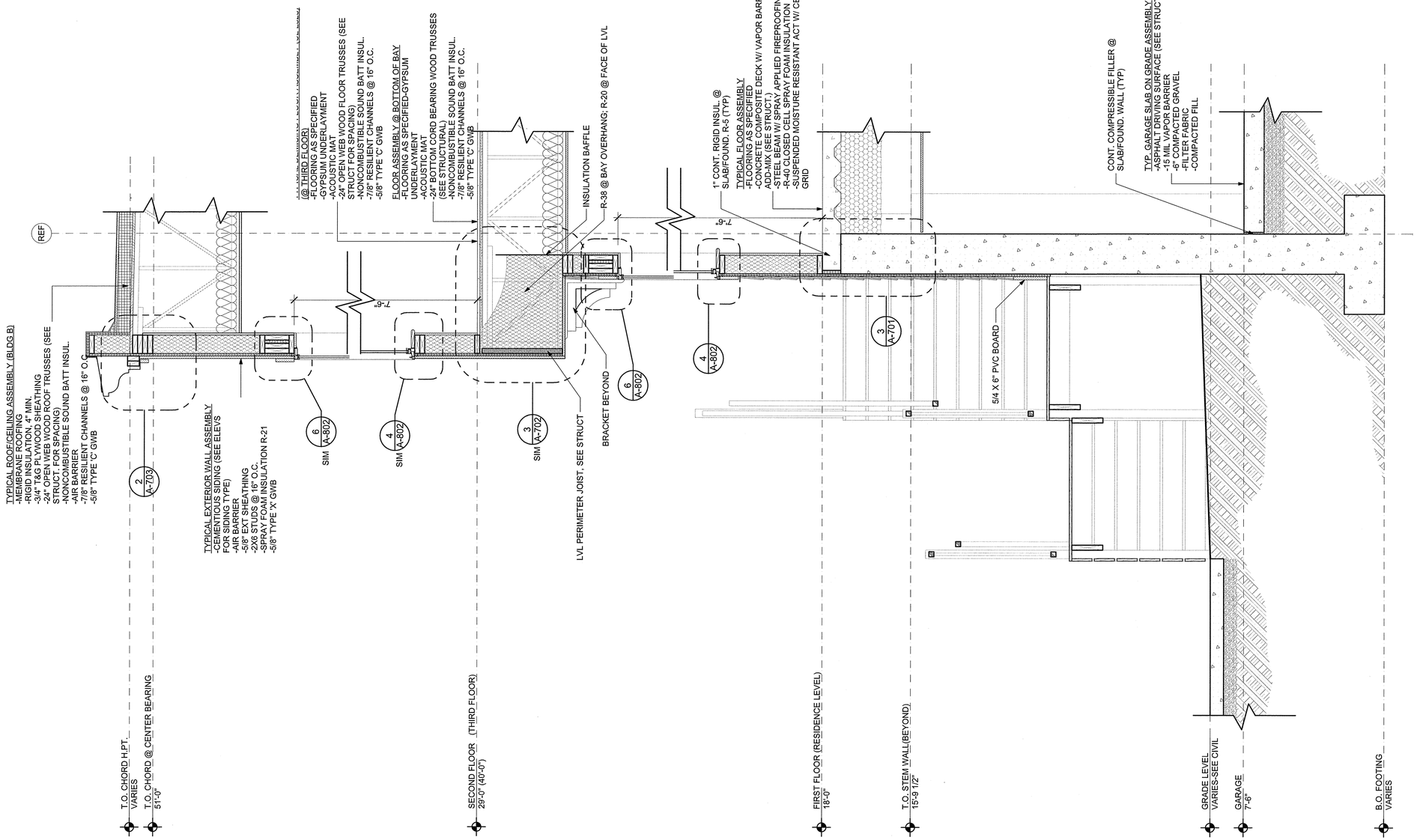

1 SECTION @ 3 STORY STOOP
SCALE: 3/4" = 1'-0"

Washington Village Phase 1

20 Day Street Building B

Norwalk, CT

Trinity Washington Village Limited Partnership
&
the Norwalk Housing Authority

E-ICON ARCHITECTURE
101 SUMMER ST BOSTON MA 02110
617-451-3333 www.iconarch.com

CONSULTANT

STAMP

STATE OF CONNECTICUT STEVEN A. HEIKIN NO. 8864 LICENSED ARCHITECT

MARK	DATE	DESCRIPTION
	09-15-2014	PERMIT/ PRICING
	06-13-2014	PRICING
	11-18-2013	40% CHFA
	09-19-2013	CAM/ SPECIAL PERMIT

PROJECT NO.: 21222
DRAWN BY: AF, SO, BD, SW
CHECKED BY:

SHEET TITLE

WALL SECTIONS, BUILDING B

A-409

9/18/2014 3:29 PM

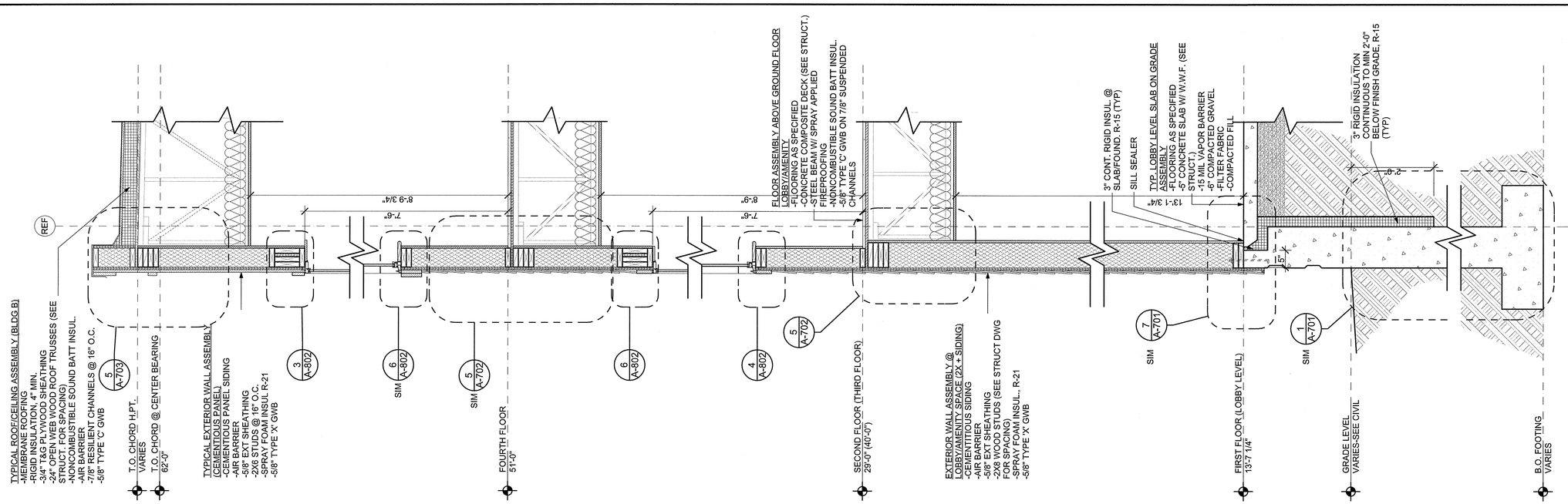

2 SECTION @ 4 STORY (SIDING)

SCALE: 3/4" = 1'-0"

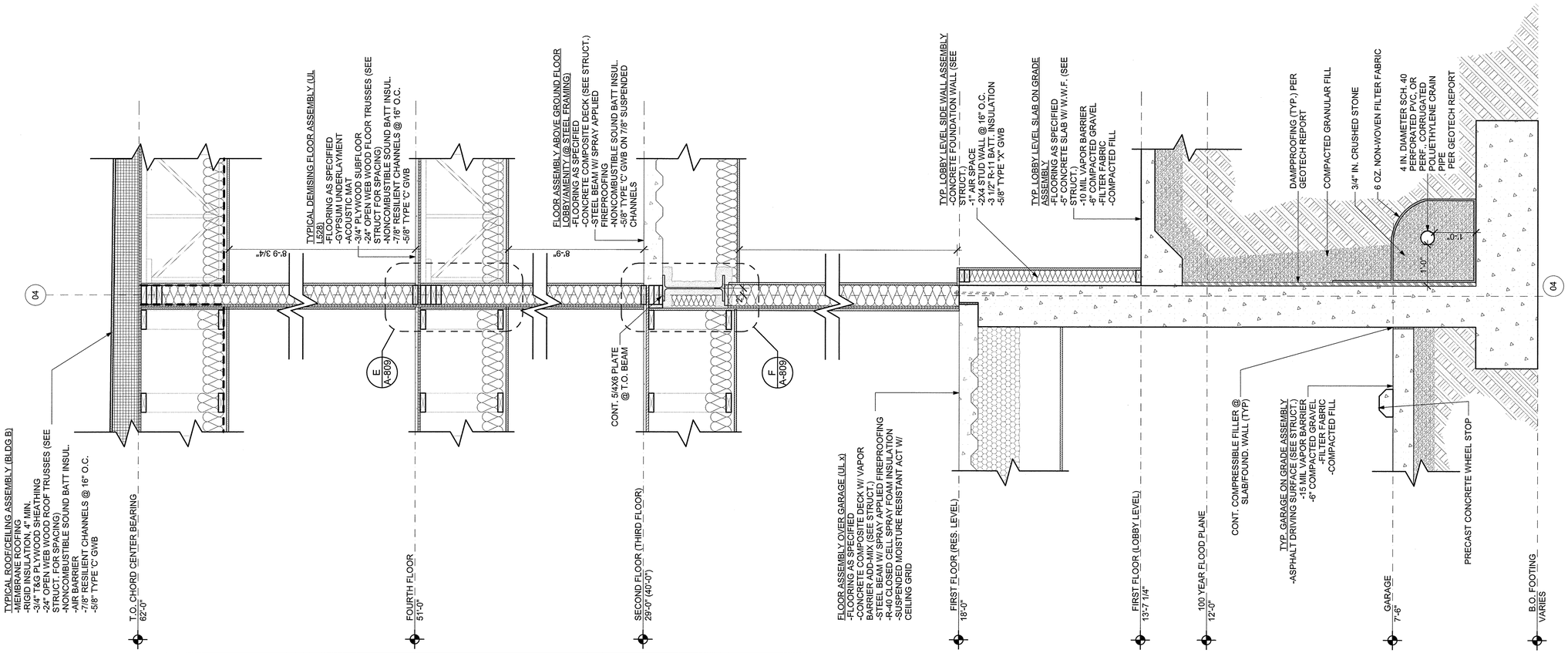

1 WALL SECTION @ PARKING/LOBBY (COLUMN LINE 04)

SCALE: 3/4" = 1'-0"

Washington Village Phase 1

20 Day Street Building B

Norwalk, CT

Trinity Washington Village Limited Partnership
&
the Norwalk Housing Authority

E-ICON ARCHITECTURE
101 SUMMER ST BOSTON MA 02110
617-451-3333 www.iconarch.com

CONSULTANT

STAMP

STATE OF CONNECTICUT
STEVEN A. HEIGHT
NO. 9954
LICENSED ARCHITECT

MARK	DATE	DESCRIPTION
	09-15-2014	PERMIT/ PRICING
	06-13-2014	PRICING
	11-18-2013	40% CHFA
	09-19-2013	CAM/ SPECIAL PERMIT

PROJECT NO.: 21222
DRAWN BY: BD, SW
CHECKED BY:

SHEET TITLE

WALL SECTIONS, BUILDING B

A-410

9/18/2014 3:29 PM

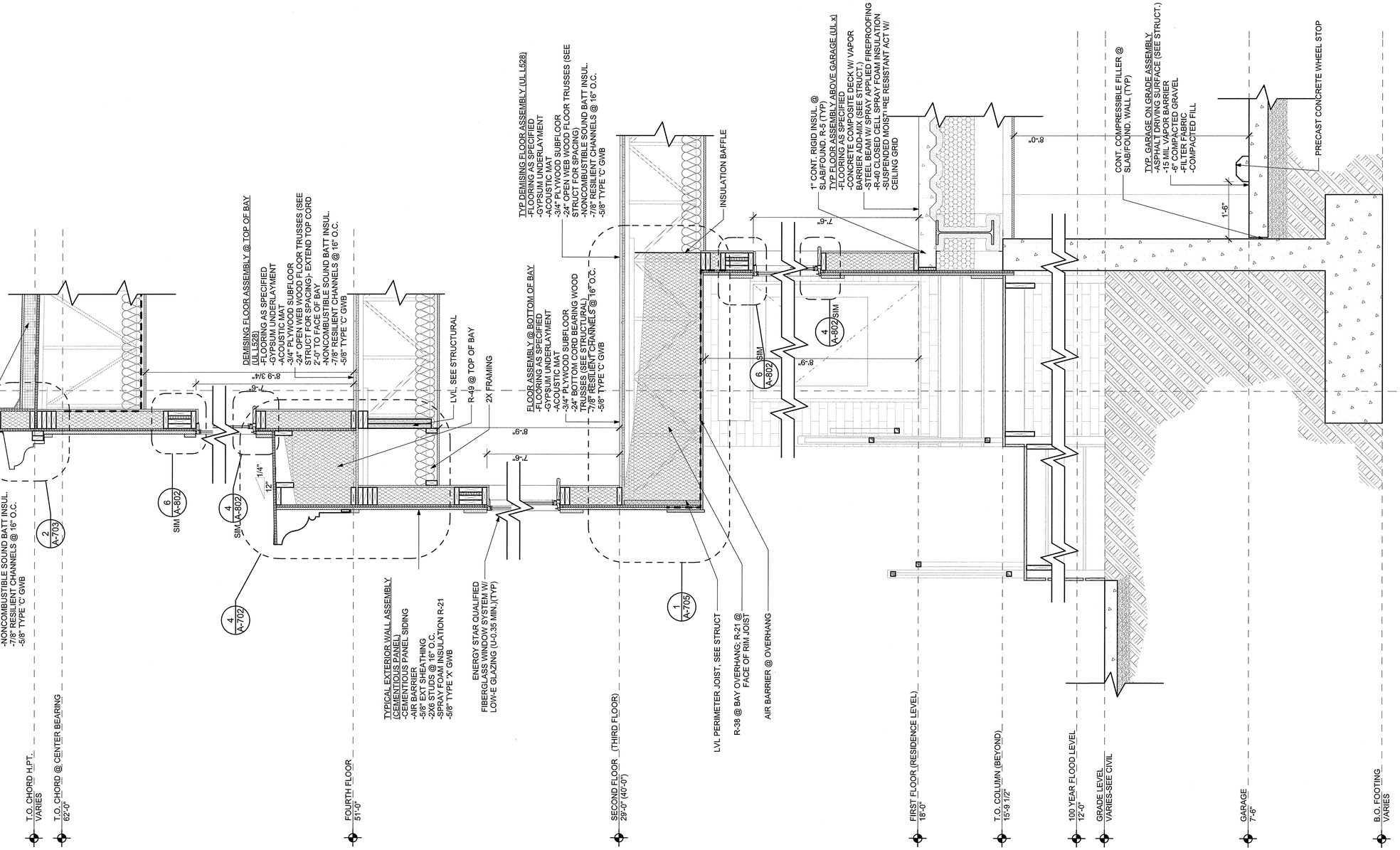

1 BAY/STOOP @ BLDG B TOWNHOUSE
SCALE: 3/4" = 1'-0"

Washington Village Phase 1

20 Day Street Building B

Norwalk, CT

Trinity Washington Village Limited Partnership
&
the Norwalk Housing Authority

ICON ARCHITECTURE
101 SUMMER ST BOSTON MA 02110
617-451-3333 www.iconarch.com

CONSULTANT

STAMP

STATE OF CONNECTICUT STEVEN A. HEIKIN NO. 8684 LICENSED ARCHITECT

MARK	DATE	DESCRIPTION
	09-15-2014	PERMIT/ PRICING
	06-13-2014	PRICING
	11-18-2013	40% CHFA
	09-19-2013	CAM/ SPECIAL PERMIT

PROJECT NO.: 21222
DRAWN BY: BD, SW
CHECKED BY:

SHEET TITLE

WALL SECTION, BUILDING B

A-411

9/18/2014 3:29 PM

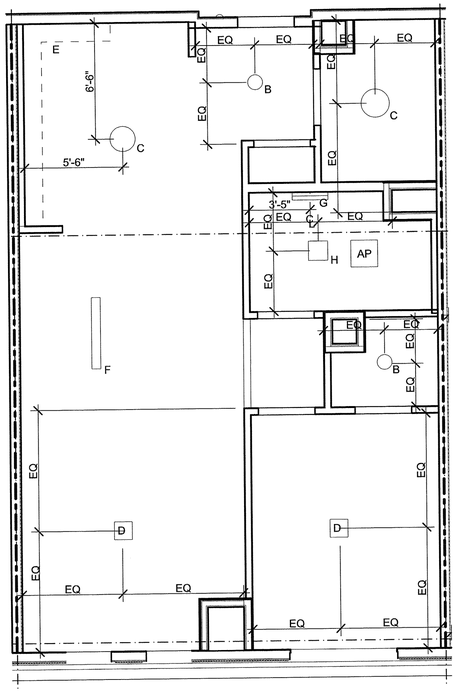

6 1BR TYPE C RCP
SCALE: 1/4" = 1'-0"

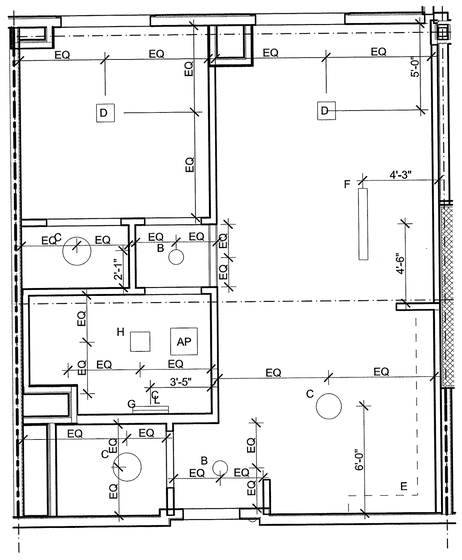

5 1BR TYPE B RCP
SCALE: 1/4" = 1'-0"

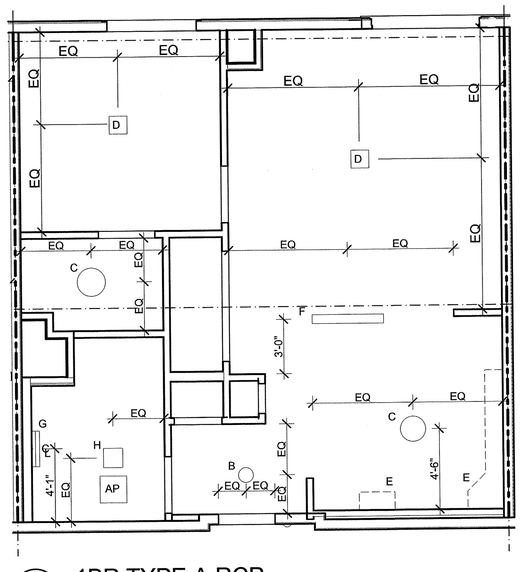

4 1BR TYPE A RCP
SCALE: 1/4" = 1'-0"

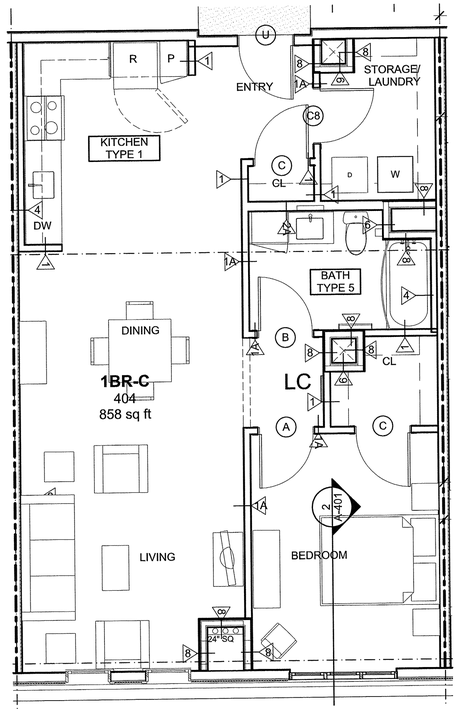

3 1BR TYPE C
SCALE: 1/4" = 1'-0"
ANSI TYPE B

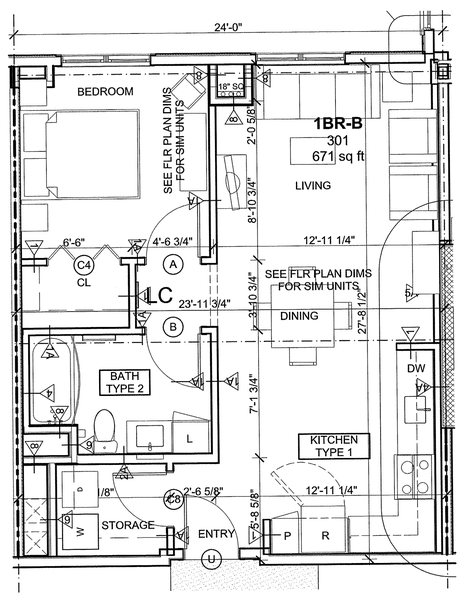

2 1BR TYPE B
SCALE: 1/4" = 1'-0"
ANSI TYPE B

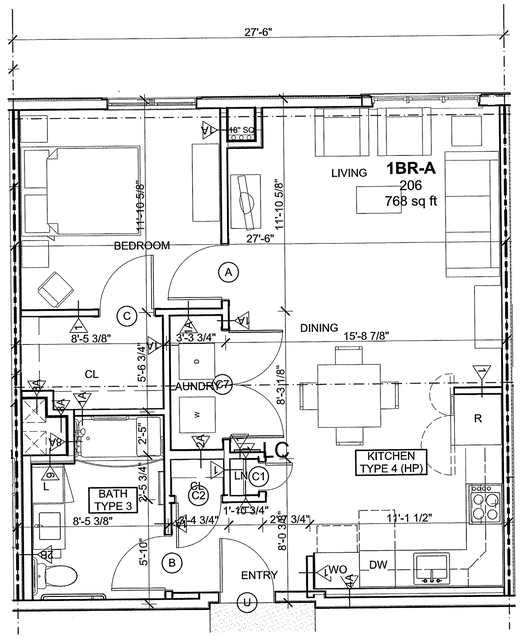

1 1BR TYPE A
SCALE: 1/4" = 1'-0"
ANSI TYPE A

KEY:

LC — UNIT LOAD CENTER

SOFFIT

HEADER @ 7'-0" A.F.F

CEILING 8'-9" UNLESS OTHERWISE NOTED

AP — SHUT-OFF ACCESS PANEL

Washington Village Phase 1

20 Day Street Building B

Norwalk, CT

Trinity Washington Village Limited Partnership & the Norwalk Housing Authority

E-ICON ARCHITECTURE
101 SUMMER ST BOSTON MA 02110
617-451-3333 www.iconarch.com

CONSULTANT

STAMP

MARK	DATE	DESCRIPTION
	09-15-2014	PERMIT/ PRICING
	06-13-2014	PRICING
	11-18-2013	40% CHFA
	09-19-2013	CAM/ SPECIAL PERMIT

PROJECT NO.: 21222
DRAWN BY: JR/ KH/ AF/ SO
CHECKED BY: KH

SHEET TITLE

TYPICAL UNIT PLANS BUILDING B

A-501

9/18/2014 3:29 PM

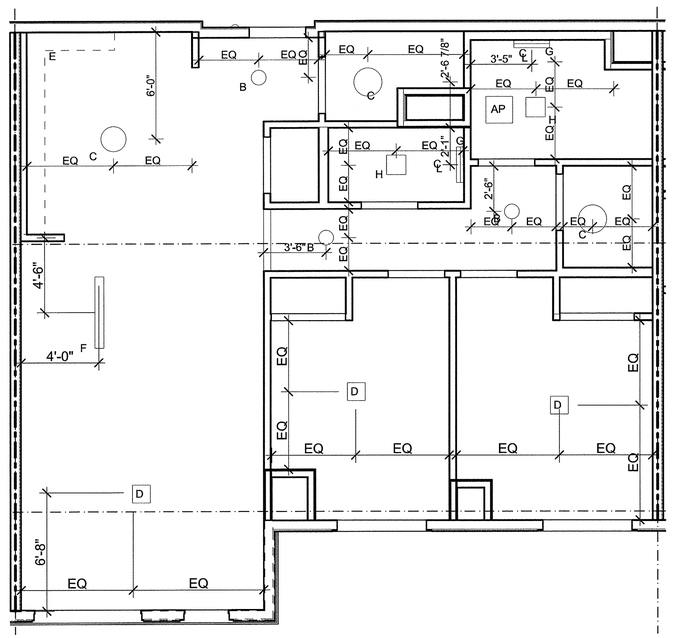

4 2BR TYPE E RCP
SCALE: 1/4" = 1'-0"

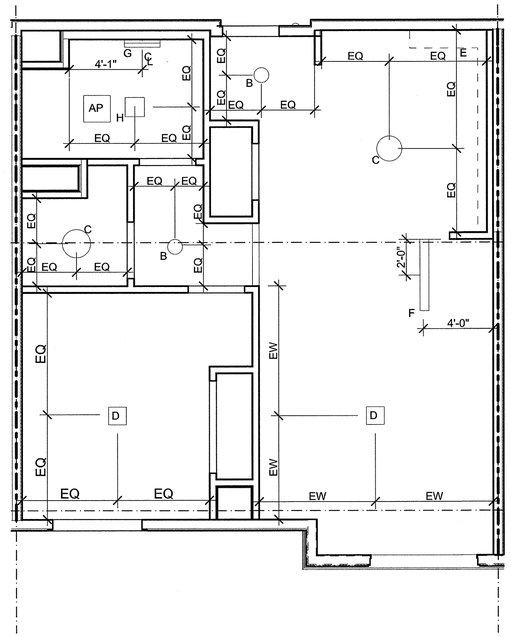

3 1BR TYPE D RCP
SCALE: 1/4" = 1'-0"

KEY:

LC UNIT LOAD CENTER

SOFFIT

HEADER @ 7'-0" A.F.F

CEILING 8'-9" UNLESS OTHERWISE NOTED

AP SHUT-OFF ACCESS PANEL

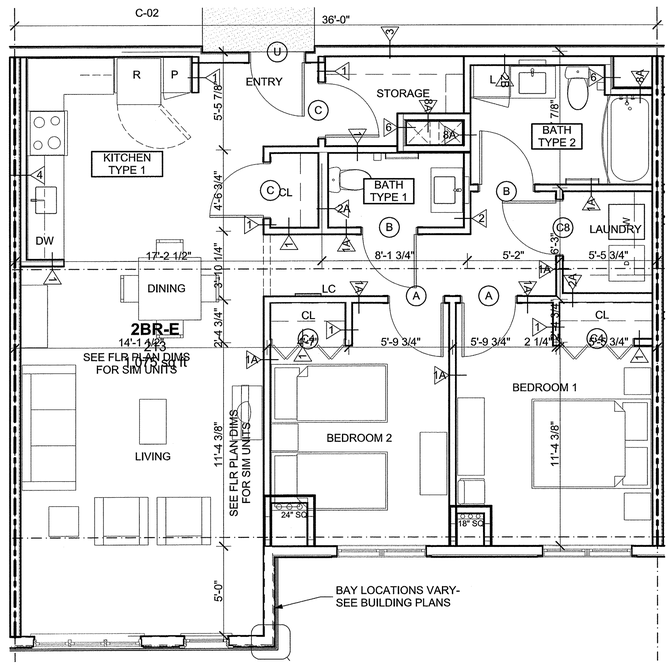

2 2BD TYPE E
SCALE: 1/4" = 1'-0"
ANSI TYPE B

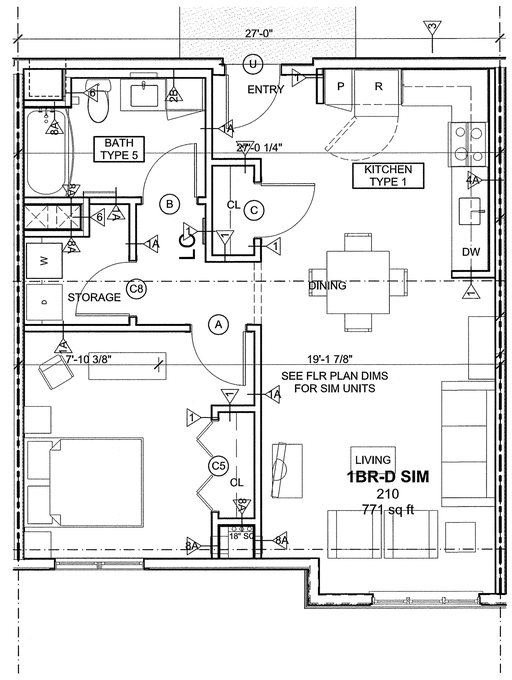

1 1BR TYPE D
SCALE: 1/4" = 1'-0"
ANSI TYPE B

Washington Village Phase 1

20 Day Street Building B

Norwalk, CT

Trinity Washington Village Limited Partnership
&
the Norwalk Housing Authority

E-ICON ARCHITECTURE
101 SUMMER ST BOSTON MA 02110
617-451-3333 www.iconarch.com

CONSULTANT

STAMP

MARK	DATE	DESCRIPTION
	09-15-2014	PERMIT/ PRICING
	06-13-2014	PRICING
	11-18-2013	40% CHFA
	09-19-2013	CAM/ SPECIAL PERMIT

PROJECT NO.: 21222
DRAWN BY: JR/ KH/ AF/ SO
CHECKED BY: KH

SHEET TITLE

TYPICAL UNIT PLANS BUILDING B

A-502

9/18/2014 3:29 PM

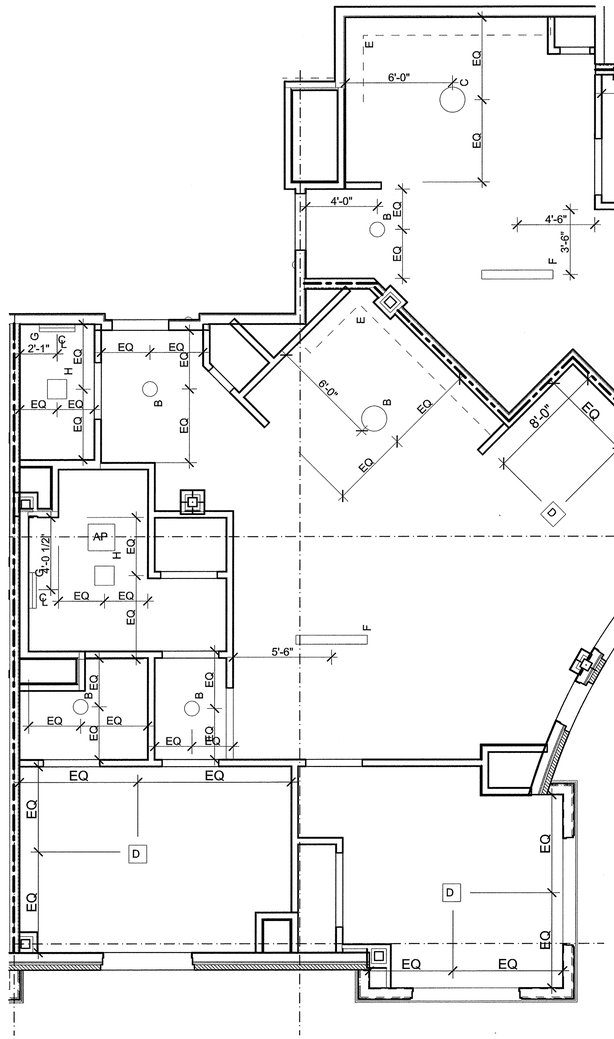

2 2BR ARC PAIR TYPE F RCP

SCALE: 1/4" = 1'-0"

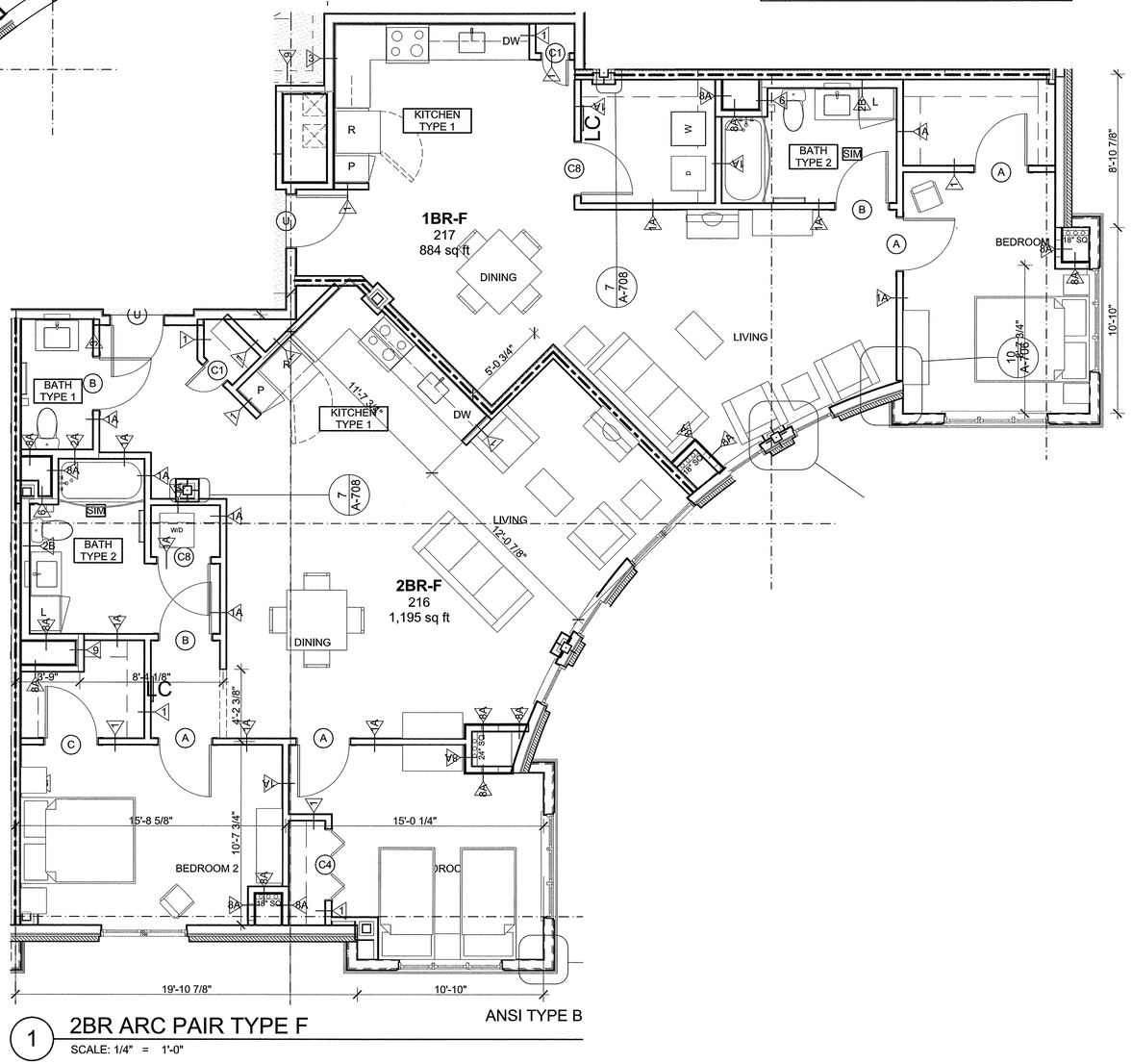

1 2BR ARC PAIR TYPE F

SCALE: 1/4" = 1'-0"

Washington Village Phase 1

20 Day Street Building B

Norwalk, CT

Trinity Washington Village Limited Partnership
&
the Norwalk Housing Authority

E-ICON ARCHITECTURE
101 SUMMER ST BOSTON MA 02110
617-451-3333 www.iconarch.com

CONSULTANT

STAMP

MARK	DATE	DESCRIPTION
	09-15-2014	PERMIT/ PRICING
	06-13-2014	PRICING
	11-18-2013	40% CHFA
	09-19-2013	CAM/ SPECIAL PERMIT

PROJECT NO.: 21222
DRAWN BY: JR/ KH/ AF/ SO
CHECKED BY: KH

SHEET TITLE

TYPICAL UNIT PLANS BUILDING B

A-503

9/18/2014 3:29 PM

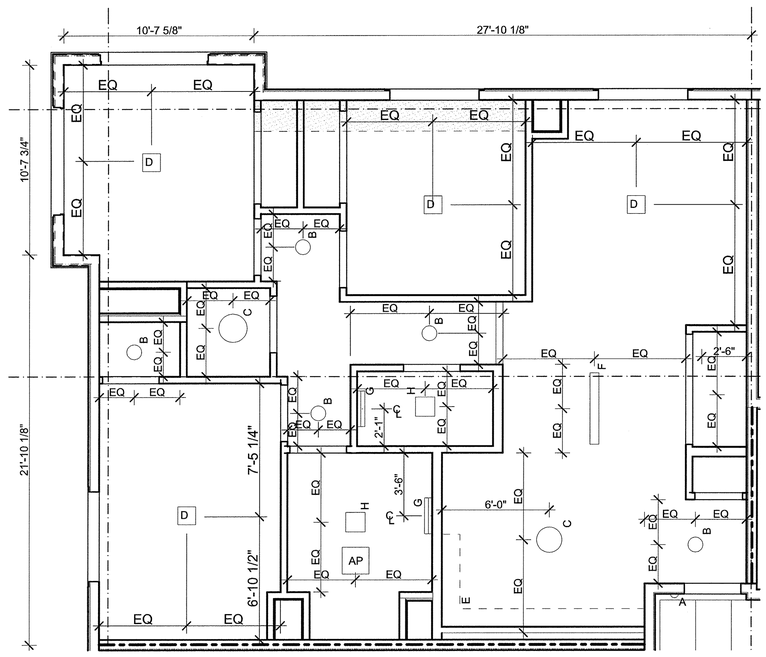

4 3BR TYPE H RCP

SCALE: 1/4" = 1'-0"

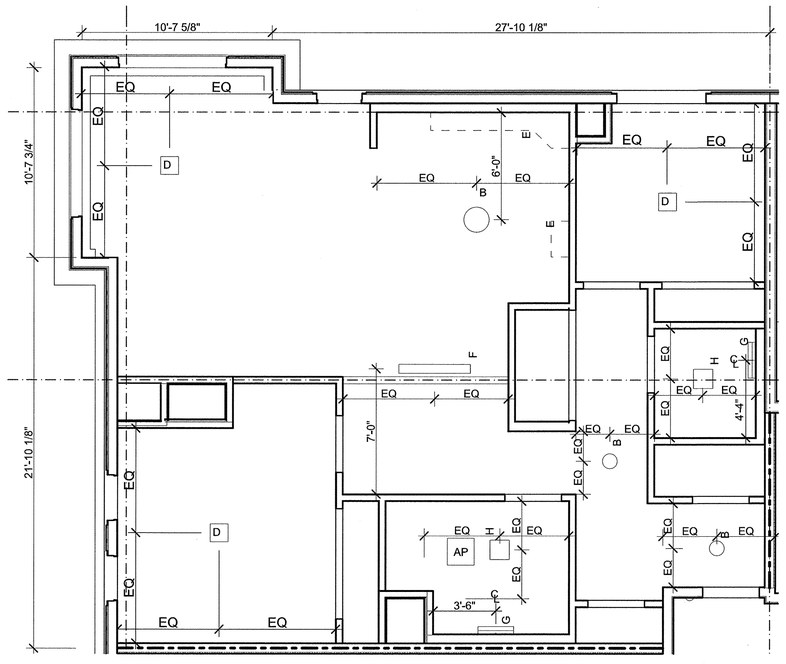

3 2BR TYPE G RCP

SCALE: 1/4" = 1'-0"

KEY:

- LC — UNIT LOAD CENTER
- SOFFIT
- HEADER @ 7'-0" A.F.F
- CEILING 8'-9" UNLESS OTHERWISE NOTED
- AP — SHUT-OFF ACCESS PANEL

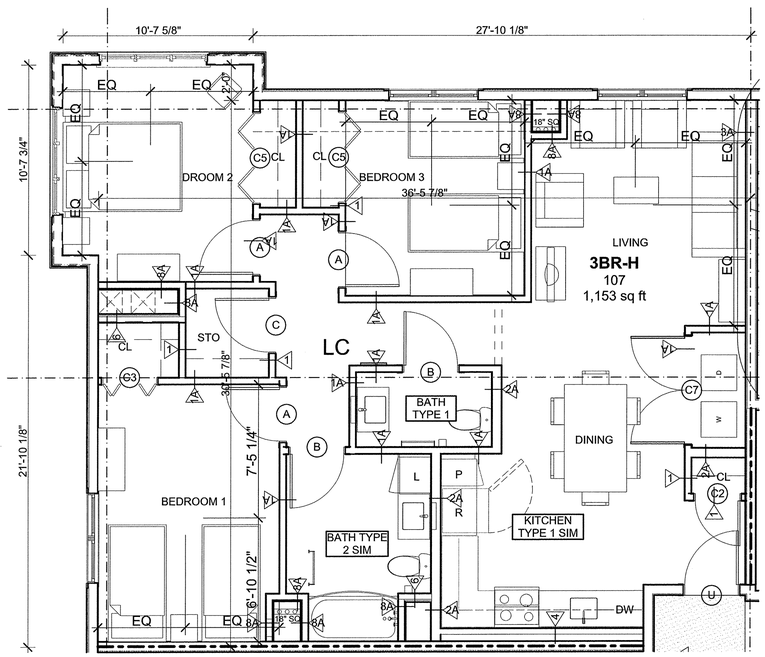

2 3BR TYPE H

SCALE: 1/4" = 1'-0"

ANSI TYPE A

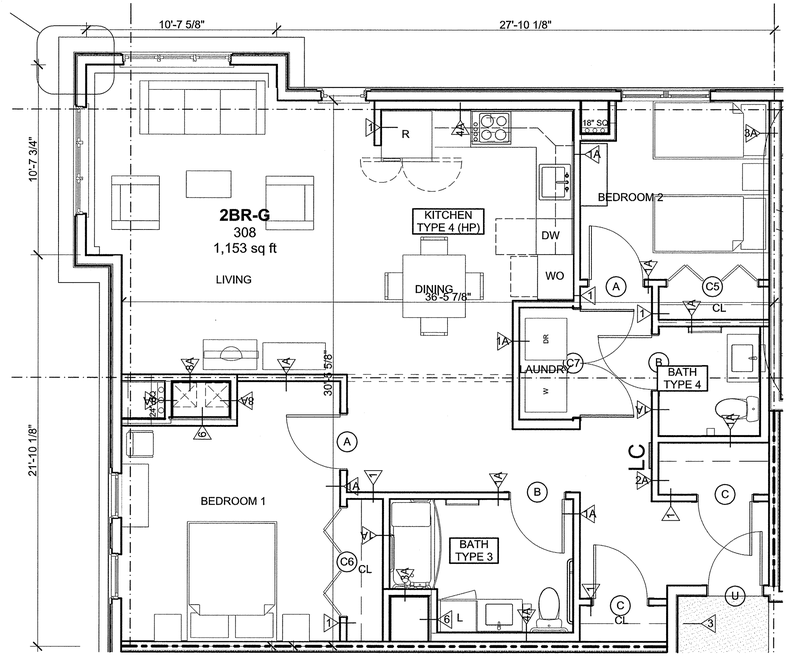

1 2BR TYPE G

SCALE: 1/4" = 1'-0"

ANSI TYPE A

Washington Village Phase 1

20 Day Street
Building B

Norwalk, CT

Trinity Washington Village Limited Partnership
&
the Norwalk Housing Authority

E-ICON ARCHITECTURE
101 SUMMER ST BOSTON MA 02110
617-451-3333 www.iconarch.com

CONSULTANT

STAMP

STATE OF CONNECTICUT
STEVEN A. HENRY
NO. 8864
LICENSED ARCHITECT

MARK	DATE	DESCRIPTION
	09-15-2014	PERMIT/ PRICING
	06-13-2014	PRICING
	11-18-2013	40% CHFA
	09-19-2013	CAM/ SPECIAL PERMIT

PROJECT NO.: 21222
DRAWN BY: JR/ KH/ AF/ SO
CHECKED BY: KH

SHEET TITLE

TYPICAL UNIT PLANS
BUILDING B

A-504

9/18/2014 3:20 PM

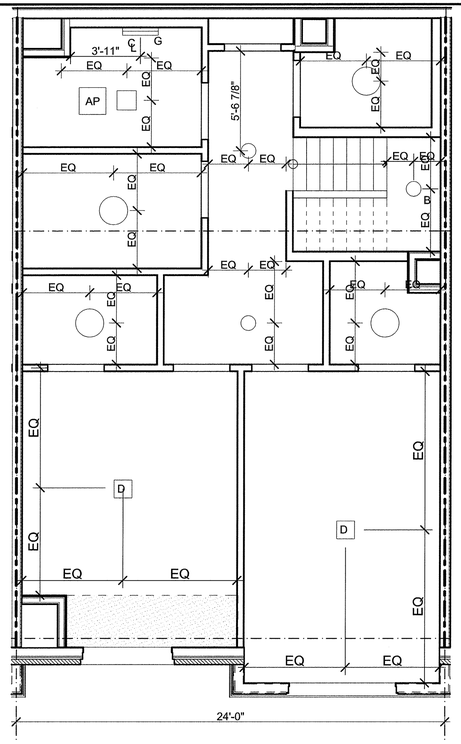

6 3BR DUPLEX TYPE K (UPPER LEVEL)
SCALE: 1/4" = 1'-0"

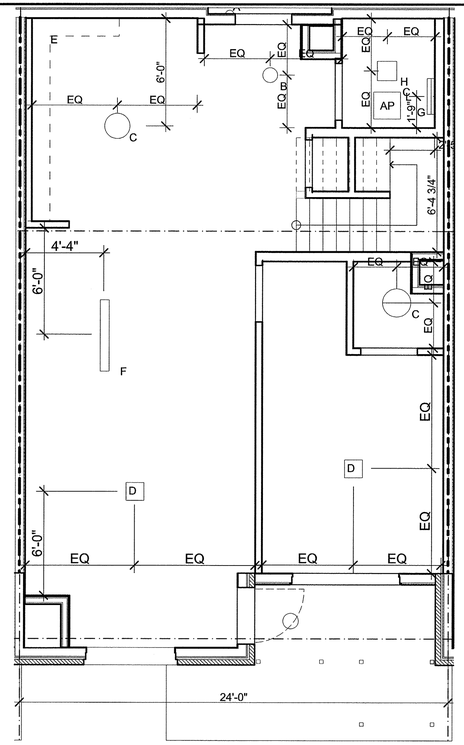

5 3BR DUPLEX TYPE K (LOWER LEVEL)
SCALE: 1/4" = 1'-0"

KEY:

LC UNIT LOAD CENTER

SOFFIT

HEADER @ 7'-0" A.F.F

CEILING 8'-9" UNLESS OTHERWISE NOTED

AP SHUT-OFF ACCESS PANEL

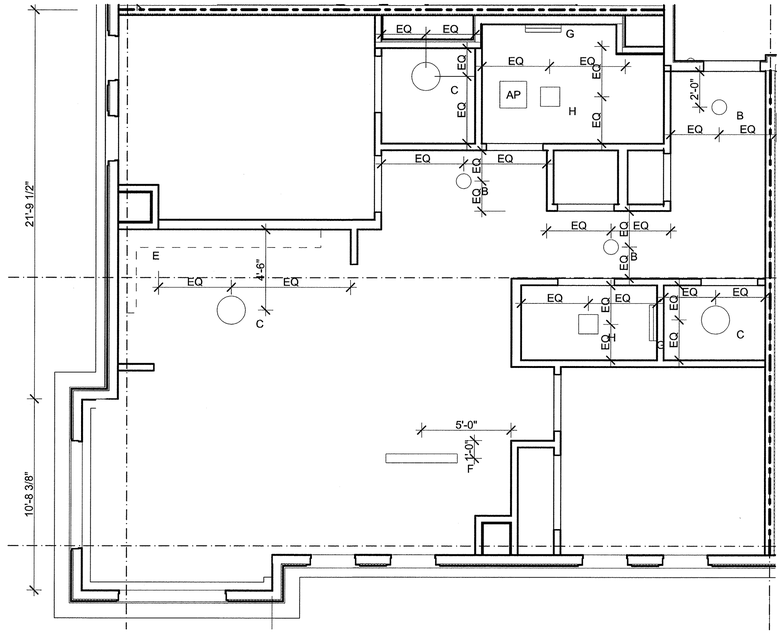

4 2BR TYPE J RCP
SCALE: 1/4" = 1'-0"

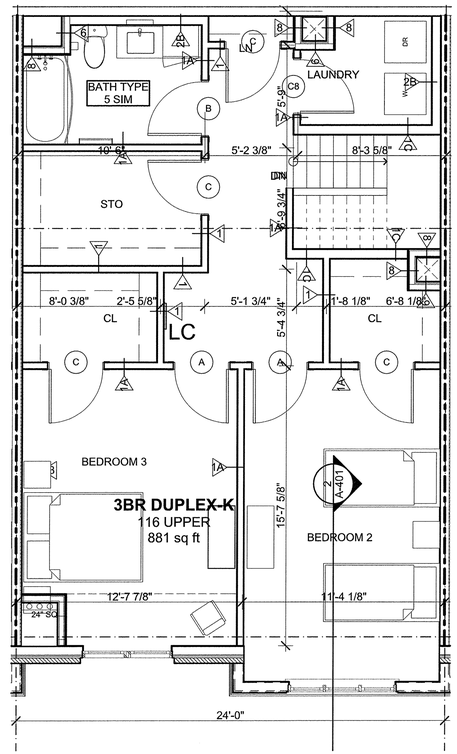

3 3BR DUPLEX TYPE K (UPPER LEVEL)
SCALE: 1/4" = 1'-0" ANSI TYPE B

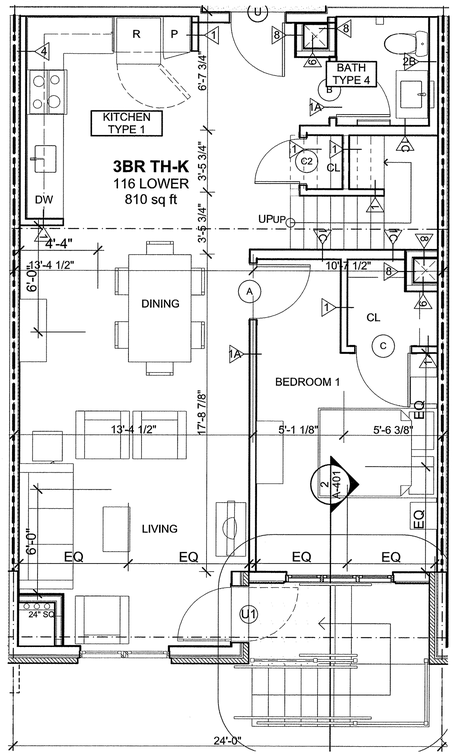

2 3BR DUPLEX TYPE K (LOWER LEVEL)
SCALE: 1/4" = 1'-0" ANSI TYPE B

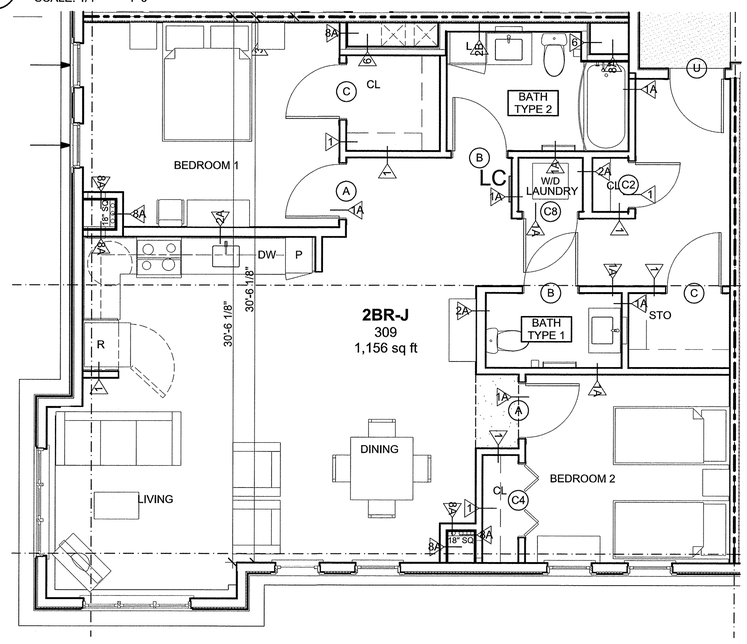

1 2BR TYPE J
SCALE: 1/4" = 1'-0" ANSI TYPE B

Washington Village Phase 1

20 Day Street Building B

Norwalk, CT

Trinity Washington Village Limited Partnership
&
the Norwalk Housing Authority

ICON ARCHITECTURE
101 SUMMER ST BOSTON MA 02110
617-451-3333 www.iconarch.com

CONSULTANT

STAMP

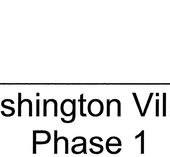

MARK	DATE	DESCRIPTION
	09-15-2014	PERMIT/ PRICING
	06-13-2014	PRICING
	11-18-2013	40% CHFA
	09-19-2013	CAM/ SPECIAL PERMIT

PROJECT NO.: 21222
DRAWN BY: JR/ KH/ AF/ SO
CHECKED BY: KH

SHEET TITLE

TYPICAL UNIT PLANS BUILDING B

A-505

9/19/2013 1:03 PM

KEY:

LC — UNIT LOAD CENTER

SOFFIT

HEADER @ 7'-0" A.F.F

CEILING 8'-9" UNLESS OTHERWISE NOTED

AP — SHUT-OFF ACCESS PANEL

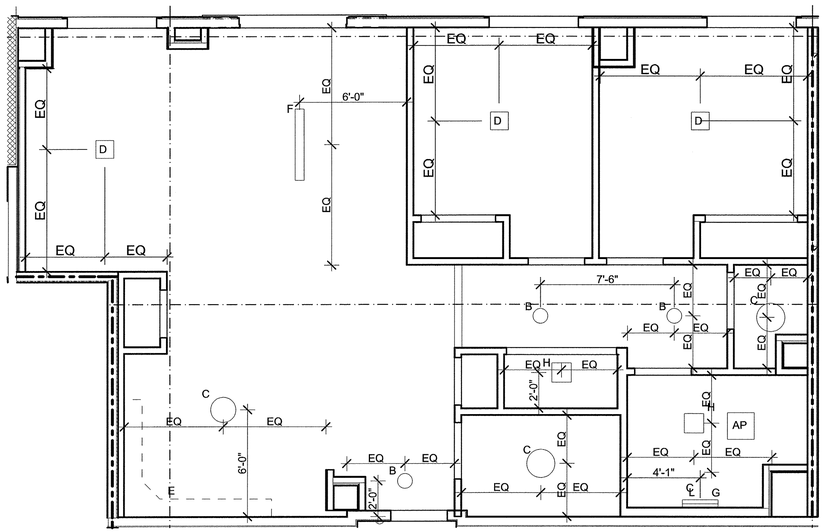

4 2BR TYPE M RCP
SCALE: 1/4" = 1'-0"

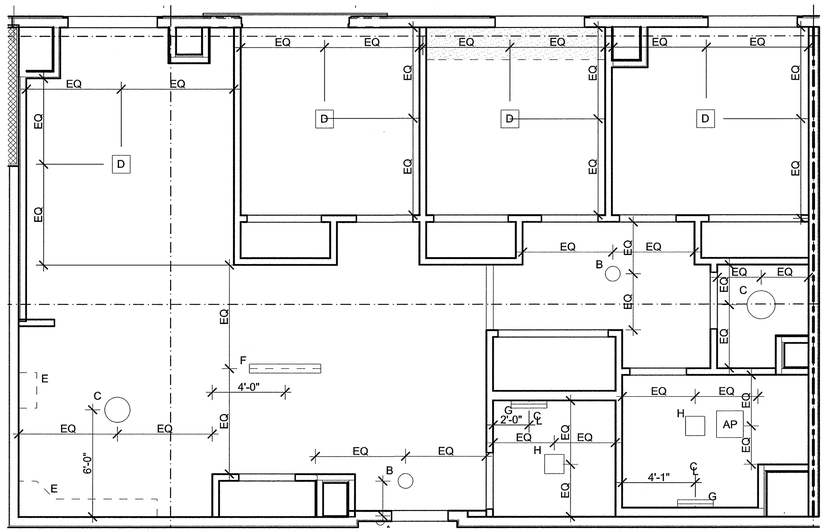

2 3BR TYPE L RCP
SCALE: 1/4" = 1'-0"

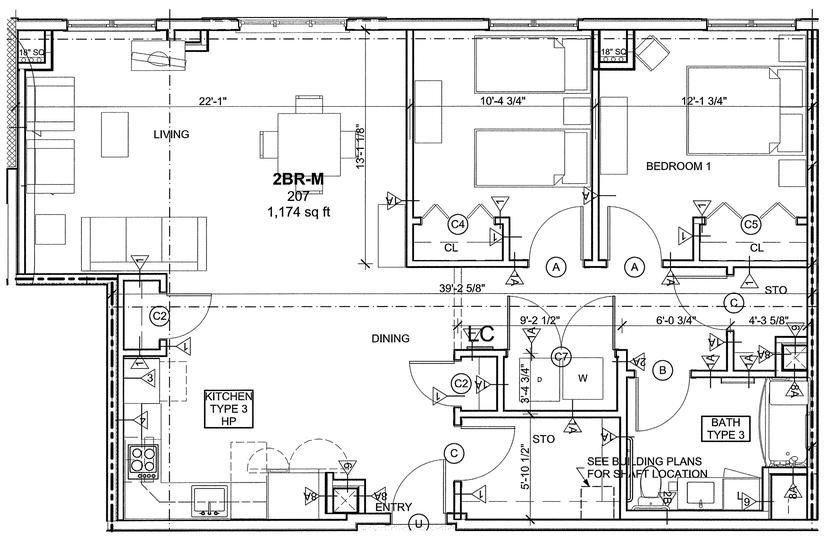

3 2BR TYPE M
SCALE: 1/4" = 1'-0"

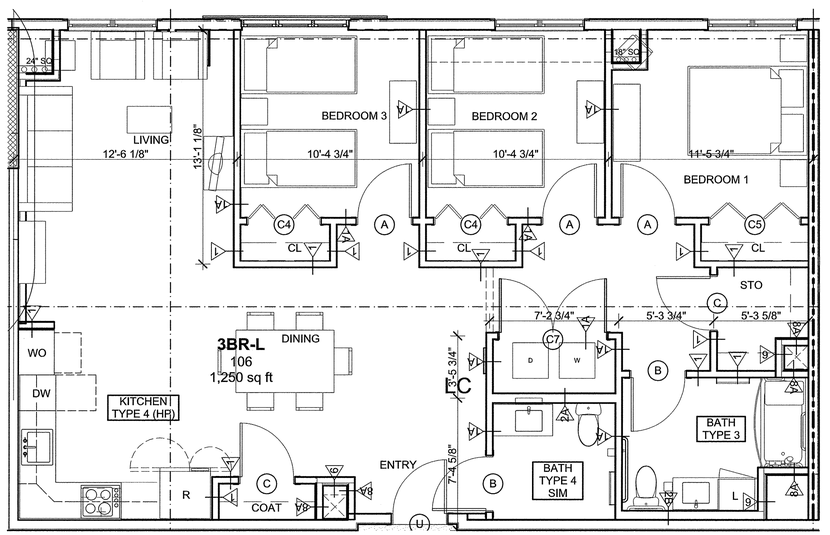

1 3BR TYPE L
SCALE: 1/4" = 1'-0"

Washington Village Phase 1

20 Day Street Building B

Norwalk, CT

Trinity Washington Village Limited Partnership
&
the Norwalk Housing Authority

E-ICON ARCHITECTURE
101 SUMMER ST BOSTON MA 02110
617-451-3333 www.iconarch.com

CONSULTANT

STAMP

STATE OF CONNECTICUT
STEVEN A. HEIKIN
NO. 8864
LICENSED ARCHITECT

MARK	DATE	DESCRIPTION
	09-15-2014	PERMIT/ PRICING
	06-13-2014	PRICING
	11-18-2013	40% CHFA
	09-19-2013	CAM/ SPECIAL PERMIT

PROJECT NO.: 21222
DRAWN BY: KH/ SO
CHECKED BY:

SHEET TITLE

TYPICAL UNIT PLANS BUILDING B

A-506

9/18/2014 3:29 PM

KEY:

LC — UNIT LOAD CENTER

SOFFIT

HEADER @ 7'-0" A.F.F

CEILING 8'-9" UNLESS OTHERWISE NOTED

AP — SHUT-OFF ACCESS PANEL

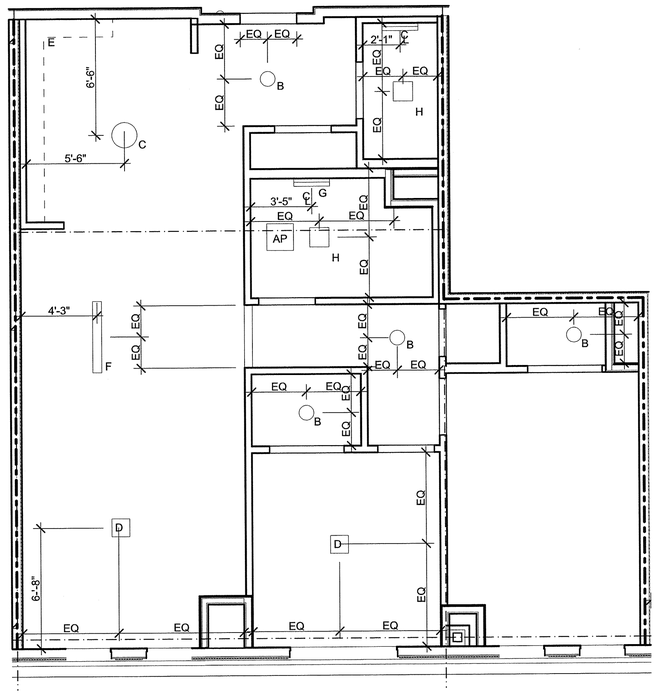

2 2BR TYPE N
SCALE: 1/4" = 1'-0"

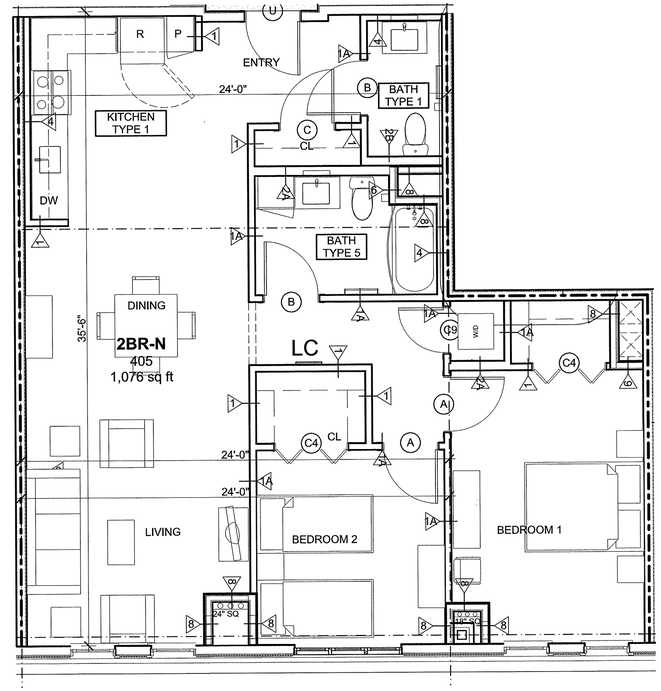

1 2BR TYPE N
SCALE: 1/4" = 1'-0"

Washington Village Phase 1

20 Day Street Building B

Norwalk, CT

Trinity Washington Village Limited Partnership
&
the Norwalk Housing Authority

E-ICON ARCHITECTURE
101 SUMMER ST BOSTON MA 02110
617-451-3333 www.iconarch.com

CONSULTANT

STAMP

STATE OF CONNECTICUT
STEVEN A. HEIKIN
NO. 8864
LICENSED ARCHITECT

MARK	DATE	DESCRIPTION
	09-15-2014	PERMIT/ PRICING
	06-13-2014	PRICING
	11-18-2013	40% CHFA
	09-19-2013	CAM/ SPECIAL PERMIT

PROJECT NO.: 21222
DRAWN BY: KH/ SO
CHECKED BY:

SHEET TITLE

TYPICAL UNIT PLANS BUILDING B

A-507

9/18/2014 3:29 PM

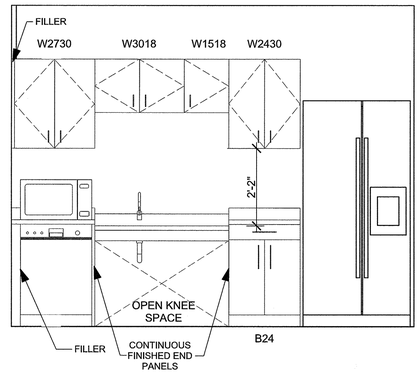

E KITCHENETTE ELEVATION
SCALE: 1/2" = 1'-0"

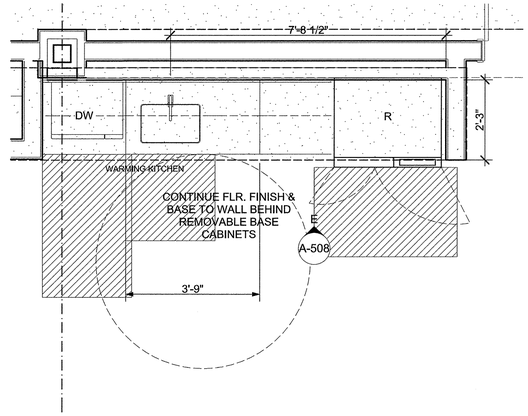

K3 GROUND FLOOR - MULTIPURPOSE RM 117
SCALE: 1/2" = 1'-0"

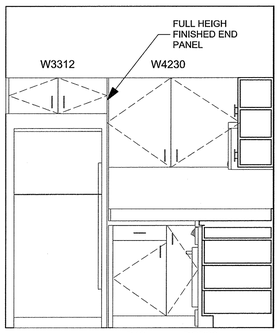

D KITCHEN 2 ELEVATION
SCALE: 1/2" = 1'-0"

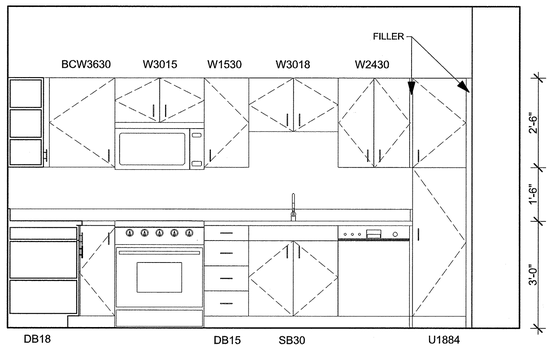

C KITCHEN 2 ELEVATION
SCALE: 1/2" = 1'-0"

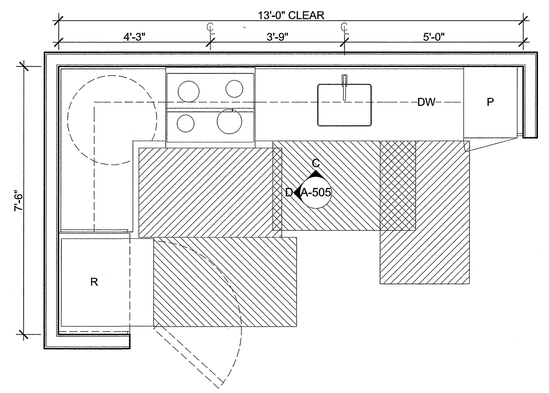

K2 KITCHEN TYPE 2
SCALE: 1/2" = 1'-0"

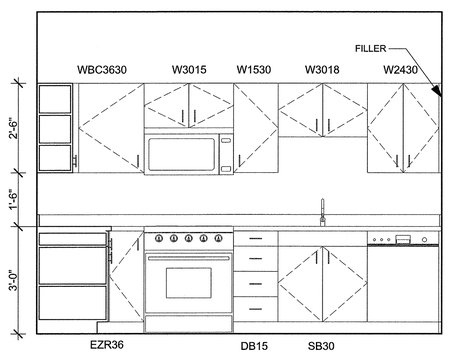

B KITCHEN 1 ELEVATION
SCALE: 1/2" = 1'-0"

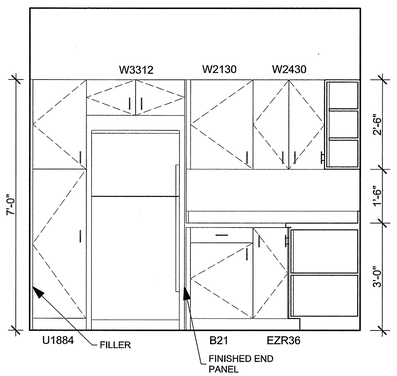

A KITCHEN 1 ELEVATION
SCALE: 1/2" = 1'-0"

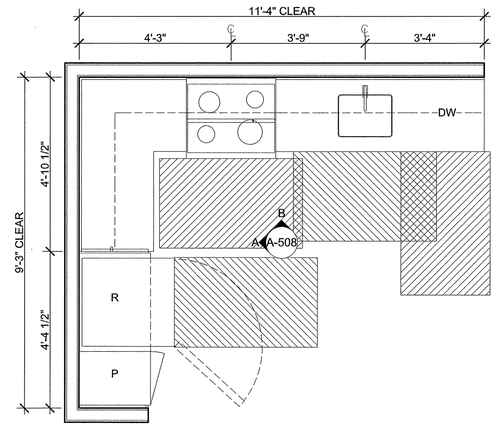

K1 KITCHEN TYPE 1 (ANSI TYPE B)
SCALE: 1/2" = 1'-0"

Washington Village Phase 1

20 Day Street Building B

Norwalk, CT

Trinity Washington Village Limited Partnership
&
the Norwalk Housing Authority

E-ICON ARCHITECTURE
101 SUMMER ST BOSTON MA 02110
617-451-3333 www.iconarch.com

CONSULTANT

STAMP



MARK	DATE	DESCRIPTION
	09-15-2014	PERMIT/ PRICING
	06-13-2014	PRICING
	11-18-2013	40% CHFA
	09-19-2013	CAM/ SPECIAL PERMIT

PROJECT NO.: 21222
DRAWN BY: JR/ RA
CHECKED BY: KH/ DW

SHEET TITLE

KITCHEN ENLARGED PLANS & ELEVATIONS

A-508

9/18/2014 3:29 PM

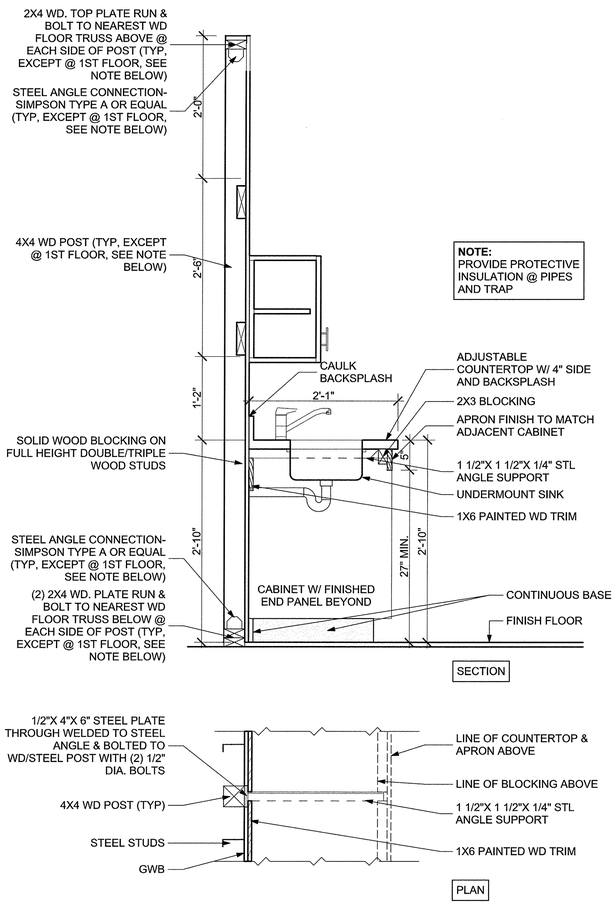

4 TYPICAL DETAIL AT TYPE A KITCHEN

SCALE: 1" = 1'-0"

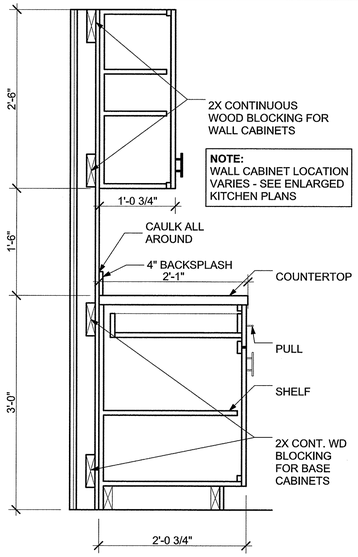

5 TYPICAL KITCHEN DETAILS

SCALE: 1" = 1'-0"

KITCHEN GENERAL NOTES: KITCHEN TYPE 3 NOT USED IN BUILDING B

1. BLOCKING REQUIRED AT ALL UPPER WALL CABINET LOCATIONS.
2. ALL EXPOSED CABINETS SHALL HAVE FINISHED END PANELS.
3. COUNTERTOPS OVERHANG 2'-0" DEEP BASE CABINETS BY 1", TYP.
4. TYPICAL DIMENSIONS ARE PROVIDED FOR IDENTIFYING CABINET SIZES AND QUANTITIES PRIOR TO CONSTRUCTION. FIELD VERIFY ALL DIMENSIONS PRIOR TO ORDERING CABINETS. FIELD MEASURE ALL COUNTERTOPS PRIOR TO FABRICATION.
5. IF COUNTERTOP SPANS EXCEEDS 5'-0", PROVIDE INTERMEDIATE BRACKET SUPPORTS. ALL SUPPORTS SHALL BE SECURED TO 2X4 FRAME.
6. PROVIDE REINFORCING INSIDE BASE CABINETS IMMEDIATELY ADJACENT TO ADJUSTABLE COUNTERTOP, TYP.
7. EXTEND FINISH FLOORING UNDER CABINETS AND APPLIANCES.
8. PROVIDE TILE BASE AT GWB PARTITIONS BEHIND APPLIANCES.
9. PROVIDE GRANITE COUNTERTOPS THROUGHOUT WITH 4" BACKSPLASH AND SIDESPLASH OF LIKE MATERIAL.
10. REFER TO SPECIFICATION SECTION 11452 FOR APPLIANCE SCHEDULE.
11. REFER TO ELECTRICAL DRAWINGS FOR DEVICE MOUNTING HEIGHT SCHEDULE.

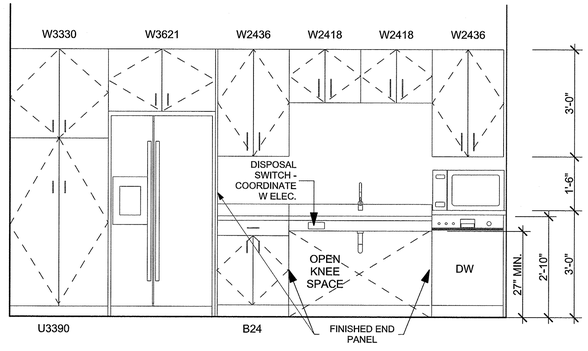

3 K5 ELEVATION

SCALE: 1/2" = 1'-0"

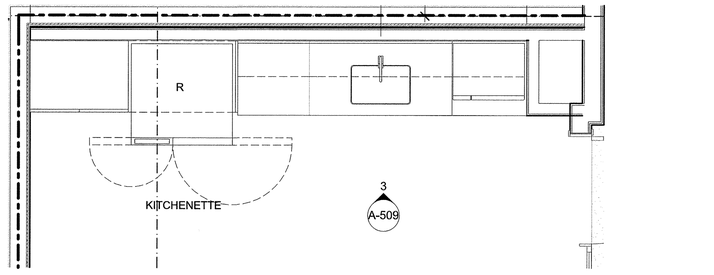

K5 KITCHEN TYPE 5 4TH FLR AMENITY RM 403 (ANSI TYPE A)

SCALE: 1/2" = 1'-0"

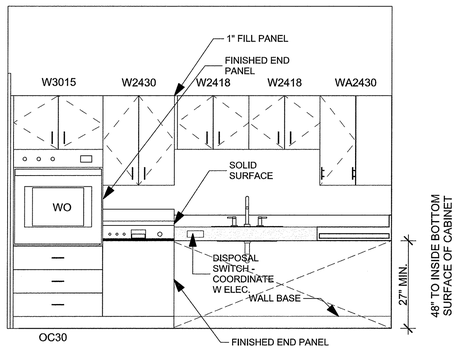

2 KITCHEN 4 ELEVATION

SCALE: 1/2" = 1'-0"

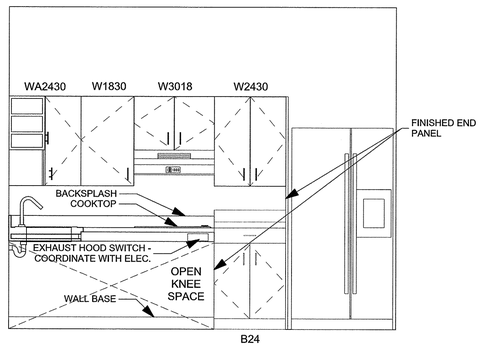

1 KITCHEN 4 ELEVATION

SCALE: 1/2" = 1'-0"

K4 KITCHEN TYPE 4 (ANSI TYPE A)

SCALE: 1/2" = 1'-0"

Washington Village Phase 1

20 Day Street Building B

Norwalk, CT

Trinity Washington Village Limited Partnership
&
the Norwalk Housing Authority

E-ICON ARCHITECTURE
101 SUMMER ST BOSTON MA 02110
617-451-3333 www.iconarch.com

CONSULTANT

STAMP

STATE OF CONNECTICUT · STEVEN A. HEIN · NO. 8854 · REGISTERED ARCHITECT

MARK	DATE	DESCRIPTION
	09-15-2014	PERMIT/ PRICING
	06-13-2014	PRICING
	11-18-2013	40% CHFA
	09-19-2013	CAM/ SPECIAL PERMIT

PROJECT NO.: 21222
DRAWN BY: JR/ RA / SO
CHECKED BY: KH/ DW

SHEET TITLE

KITCHEN DETAILS, ENLARGED PLANS & ELEVATIONS

A-509

9/13/2014 3:29 PM

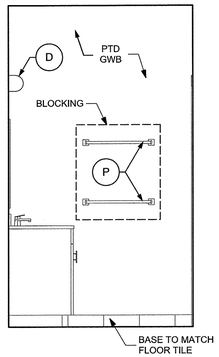

M B4 ELEVATION
SCALE: 1/2" = 1'-0"

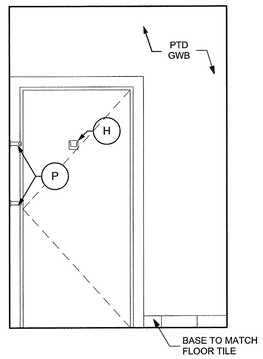

L B4 ELEVATION
SCALE: 1/2" = 1'-0"

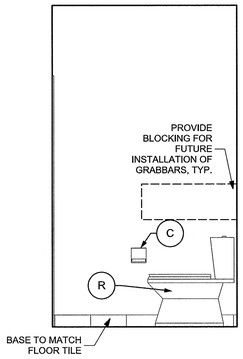

K B4 ELEVATION
SCALE: 1/2" = 1'-0"

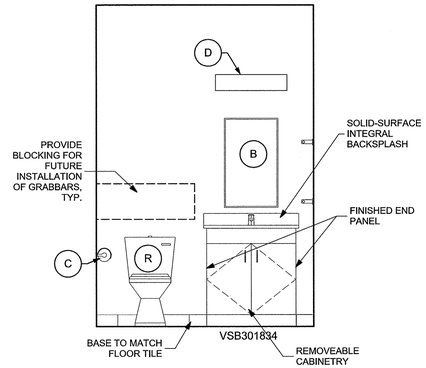

J B4 ELEVATION
SCALE: 1/2" = 1'-0"

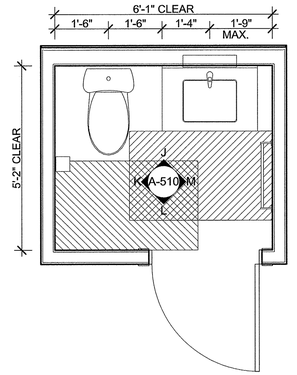

B4 BATH TYPE 4 (TYPE B) (ANSI TYPE B)
SCALE: 1/2" = 1'-0"

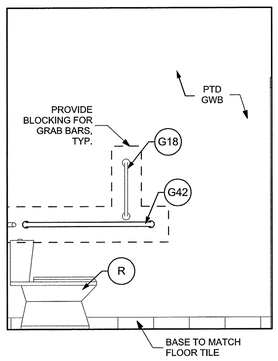

H B3 ELEVATION
SCALE: 1/2" = 1'-0"

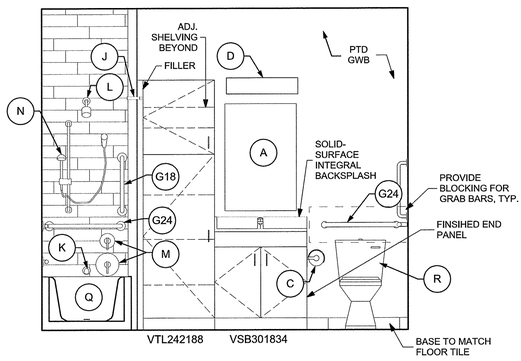

G B3 ELEVATION
SCALE: 1/2" = 1'-0"

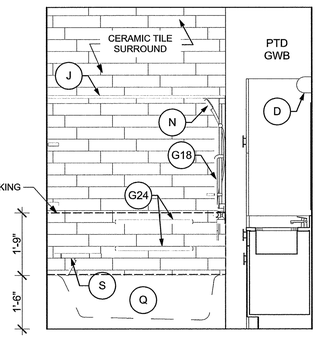

F B3 ELEVATION
SCALE: 1/2" = 1'-0"

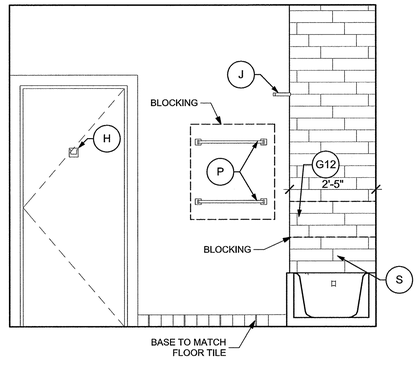

E B3 ELEVATION
SCALE: 1/2" = 1'-0"

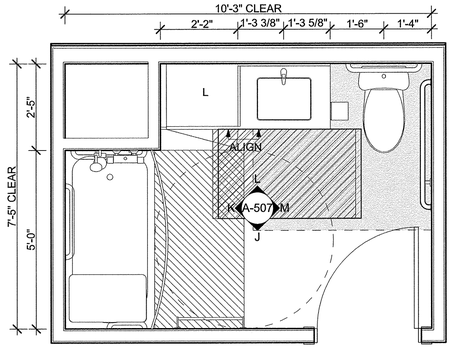

B3 BATH TYPE 3 (TYPE A) (ANSI TYPE A)
SCALE: 1/2" = 1'-0"

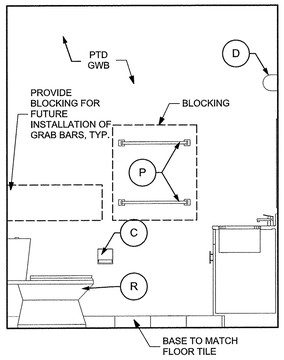

D B1 ELEVATION
SCALE: 1/2" = 1'-0"

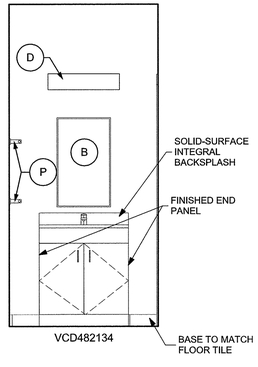

C B1 ELEVATION
SCALE: 1/2" = 1'-0"

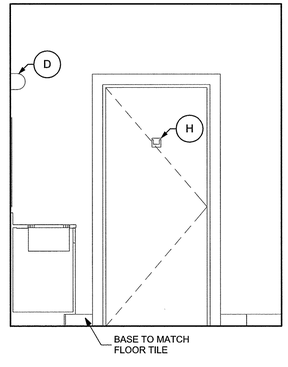

B B1 ELEVATION
SCALE: 1/2" = 1'-0"

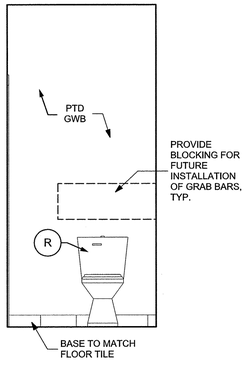

A B1 ELEVATION
SCALE: 1/2" = 1'-0"

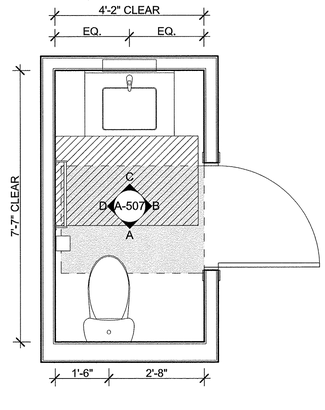

B1 BATH TYPE 1 (TYPE B)
SCALE: 1/2" = 1'-0"

Washington Village Phase 1

20 Day Street
Building B

Norwalk, CT

Trinity Washington Village Limited Partnership
&
the Norwalk Housing Authority

E-ICON ARCHITECTURE
101 SUMMER ST BOSTON MA 02110
617-451-3333 www.iconarch.com

CONSULTANT

STAMP

STATE OF CONNECTICUT · STEVEN A. HEINEN · NO. 8664 · LICENSED ARCHITECT

MARK	DATE	DESCRIPTION
	09-15-2014	PERMIT/ PRICING
	06-13-2014	PRICING
	11-18-2013	40% CHFA
	09-19-2013	CAM/ SPECIAL PERMIT

PROJECT NO.: 21222
DRAWN BY: JR/ RA
CHECKED BY: KH/ DW

SHEET TITLE

BATH ENLARGED PLANS & ELEVATIONS

A-510

9/19/2014 3:29 PM

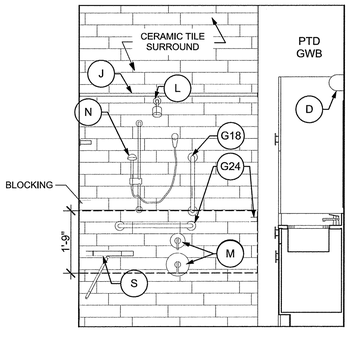

H B6 ELEVATION
SCALE: 1/2" = 1'-0"

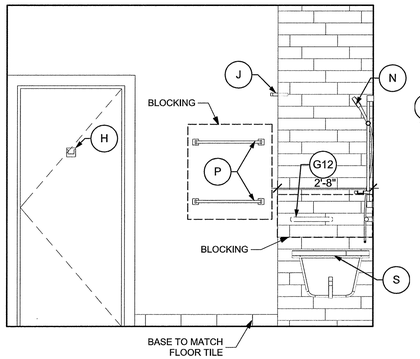

G B6 ELEVATION
SCALE: 1/2" = 1'-0"

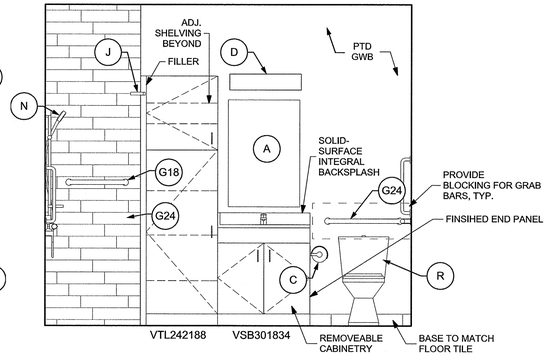

F B6 ELEVATION
SCALE: 1/2" = 1'-0"

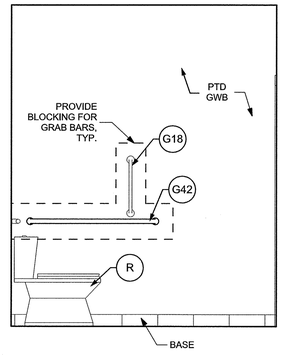

E B6 ELEVATION
SCALE: 1/2" = 1'-0"

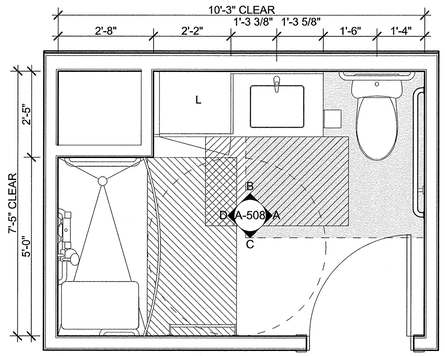

B6 BATH TYPE 6 (TYPE A)
SCALE: 1/2" = 1'-0"

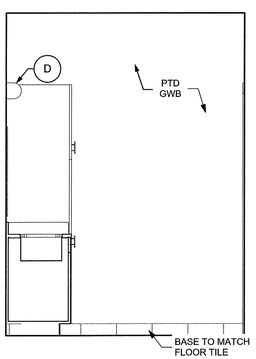

D B1 ELEVATION
SCALE: 1/2" = 1'-0"

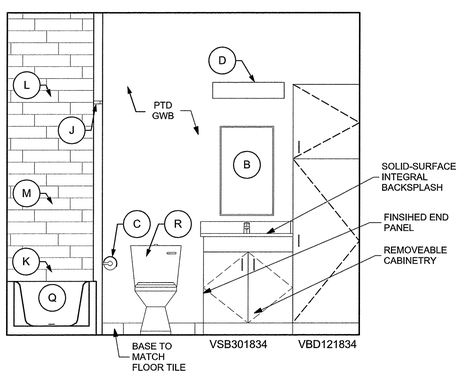

C B1 ELEVATION
SCALE: 1/2" = 1'-0"

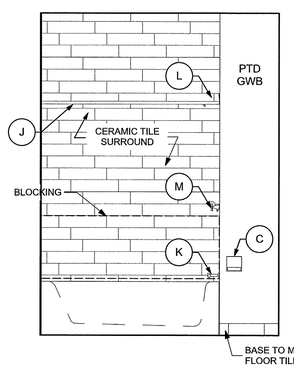

B B1 ELEVATION
SCALE: 1/2" = 1'-0"

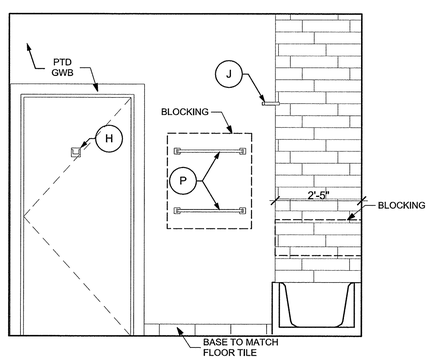

A B1 ELEVATION
SCALE: 1/2" = 1'-0"

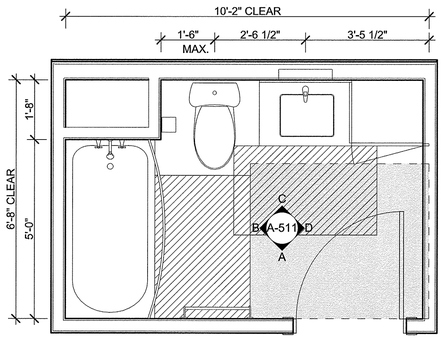

B5 BATH TYPE 5
SCALE: 1/2" = 1'-0"

Washington Village Phase 1

20 Day Street Building B

Norwalk, CT

Trinity Washington Village Limited Partnership
&
the Norwalk Housing Authority

E-ICON ARCHITECTURE
101 SUMMER ST BOSTON MA 02110
617-451-3333 www.iconarch.com

CONSULTANT

STAMP



MARK	DATE	DESCRIPTION
	09-15-2014	PERMIT/ PRICING
	06-13-2014	PRICING
	11-18-2013	40% CHFA
	09-19-2013	CAM/ SPECIAL PERMIT

PROJECT NO.: 21222
DRAWN BY: JR/ RA
CHECKED BY: KH/ DW

SHEET TITLE

BATH ENLARGED PLANS & ELEVATIONS

A-511

9/18/2014 3:29 PM

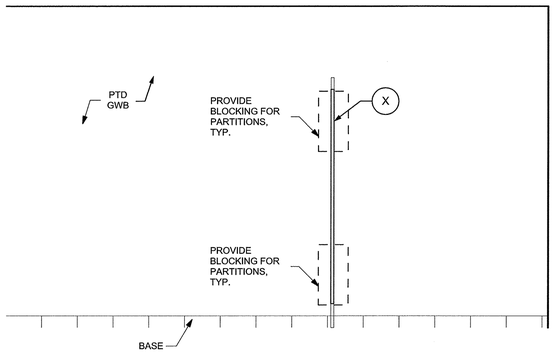

H B8 ELEVATION
SCALE: 1/2" = 1'-0"

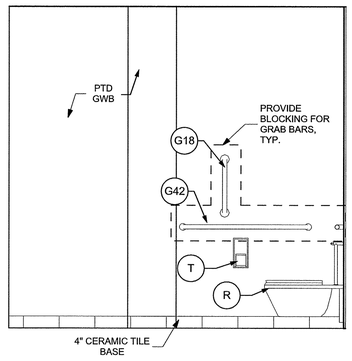

G B8 ELEVATION
SCALE: 1/2" = 1'-0"

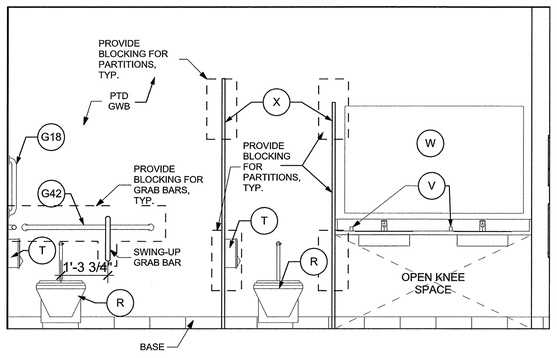

F B8 ELEVATION
SCALE: 1/2" = 1'-0"

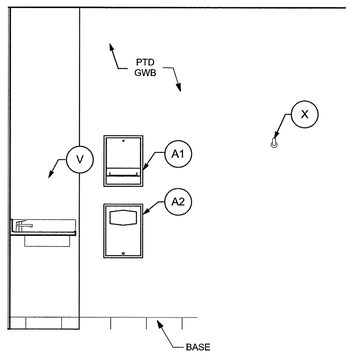

E B8 ELEVATION
SCALE: 1/2" = 1'-0"

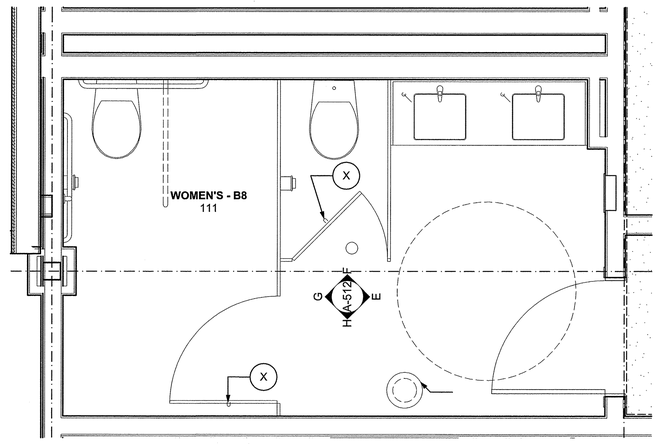

B8 BATH TYPE 8 COMMON
SCALE: 1/2" = 1'-0"

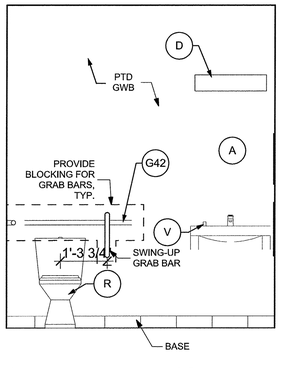

D B7 ELEVATION
SCALE: 1/2" = 1'-0"

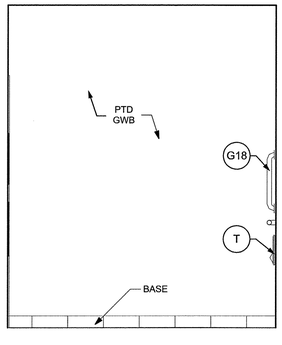

C B7 ELEVATION
SCALE: 1/2" = 1'-0"

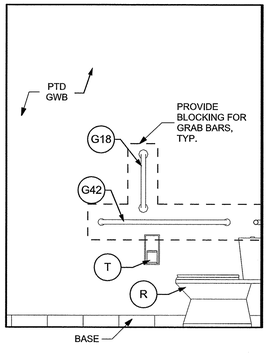

B B7 ELEVATION
SCALE: 1/2" = 1'-0"

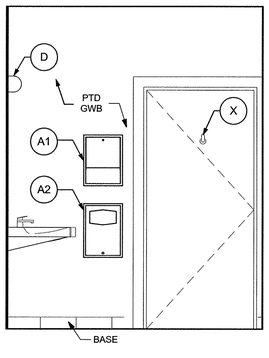

A B7 ELEVATION
SCALE: 1/2" = 1'-0"

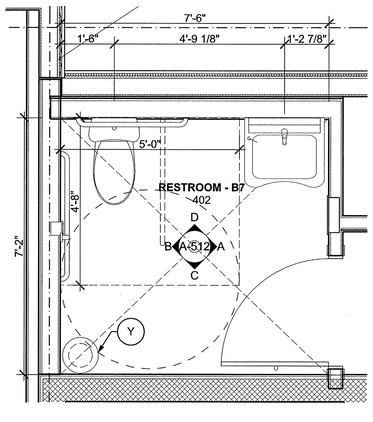

B7 BATH TYPE 7 COMMON
SCALE: 1/2" = 1'-0"

Washington Village Phase 1

20 Day Street Building B

Norwalk, CT

Trinity Washington Village Limited Partnership
&
the Norwalk Housing Authority

E-ICON ARCHITECTURE
101 SUMMER ST BOSTON MA 02110
617-451-3333 www.iconarch.com

CONSULTANT

STAMP



MARK	DATE	DESCRIPTION
	09-15-2014	PERMIT/ PRICING
	06-13-2014	PRICING
	11-18-2013	40% CHFA
	09-19-2013	CAM/ SPECIAL PERMIT

PROJECT NO.: 21222
DRAWN BY:
CHECKED BY:

SHEET TITLE

COMMON AREA BATH PLANS & ELEVATIONS

A-512

9/18/2014 3:29 PM

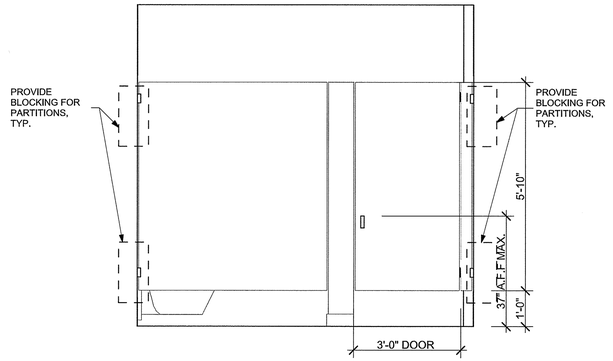

C1 BATHROOM PARTITION
SCALE: 1/2" = 1'-0"

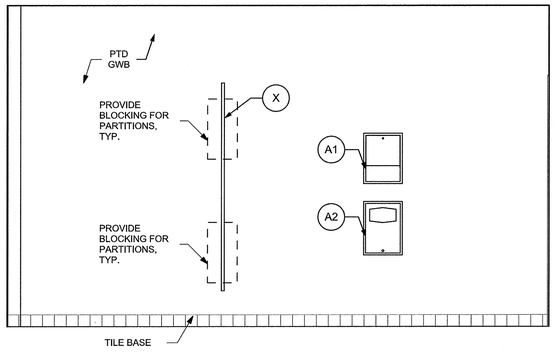

D B9 ELEVATION
SCALE: 1/2" = 1'-0"

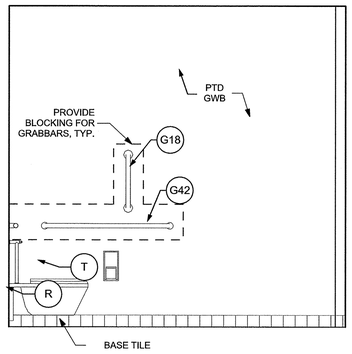

C B9 ELEVATION
SCALE: 1/2" = 1'-0"

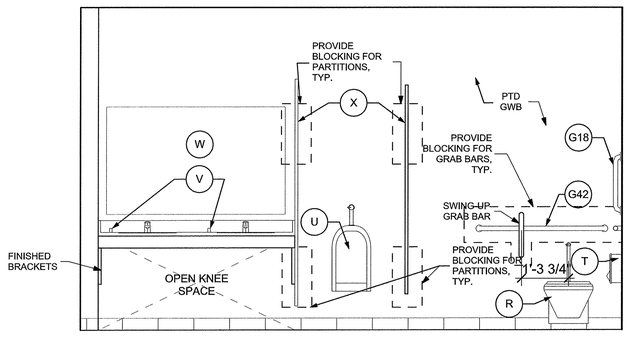

B B9 ELEVATION
SCALE: 1/2" = 1'-0"

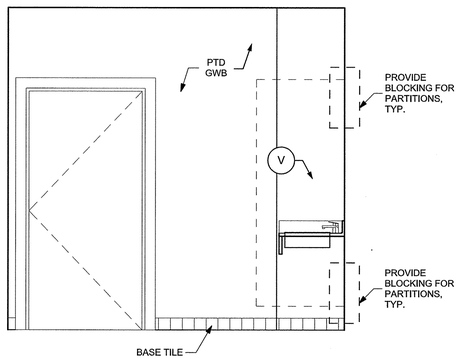

A B9 ELEVATION
SCALE: 1/2" = 1'-0"

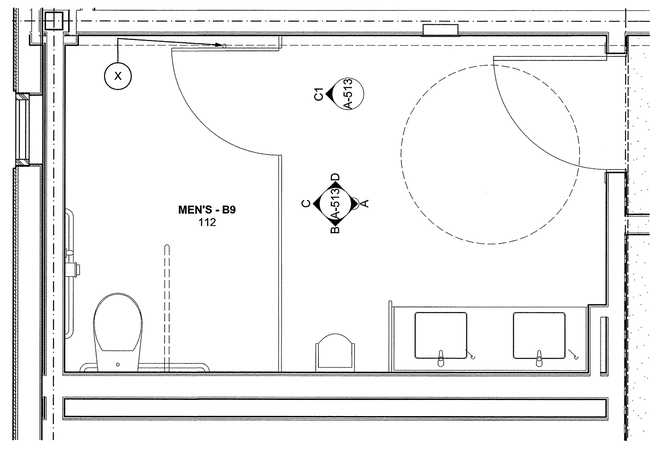

B9 BATH TYPE 9 COMMON
SCALE: 1/2" = 1'-0"

Washington Village Phase 1

20 Day Street Building B

Norwalk, CT

Trinity Washington Village Limited Partnership
&
the Norwalk Housing Authority

E-ICON ARCHITECTURE
101 SUMMER ST BOSTON MA 02110
617-451-3333 www.iconarch.com

CONSULTANT

STAMP



MARK	DATE	DESCRIPTION
	09-15-2014	PERMIT/ PRICING
	06-13-2014	PRICING
	11-18-2013	40% CHFA
	09-19-2013	CAM/ SPECIAL PERMIT

PROJECT NO.: 21222
DRAWN BY:
CHECKED BY:

SHEET TITLE

COMMON AREA BATH PLANS & ELEVATIONS

A-513

9/19/2013 3:59 PM

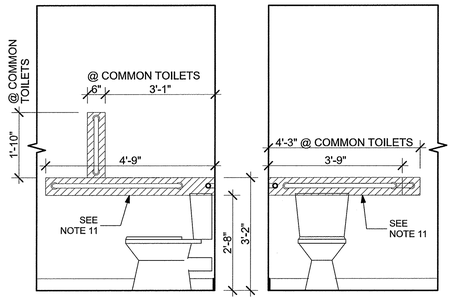

@ TYPE A RESIDENTIAL BATHS
@ COMMON TOILET ROOMS

4 WALL REINF. LOCATIONS AT TOILET

SCALE: 1' = 1'-0"

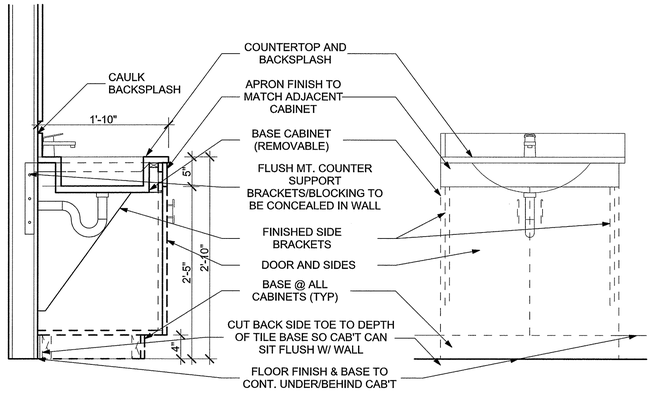

2 TYPICAL DETAILS AT TYPE B REMOVABLE BASE CABINET

SCALE: 1" = 1'-0"

TYP. FLOOR ASSEMBLY:
-3/4" GYPSUM UNDERLAYMENT
-PLYWOOD/OSB SUBFLOOR
-3 1/2" F.G. BATTS.
-RESILIENT CHANNELS @ 12" O.C.
-1 LAYER OF 5/8" GWB @ CEILING AND SIDES OF FAN RECESS

ASSEMBLY 1 HR FIRE RATED
UL# L-558

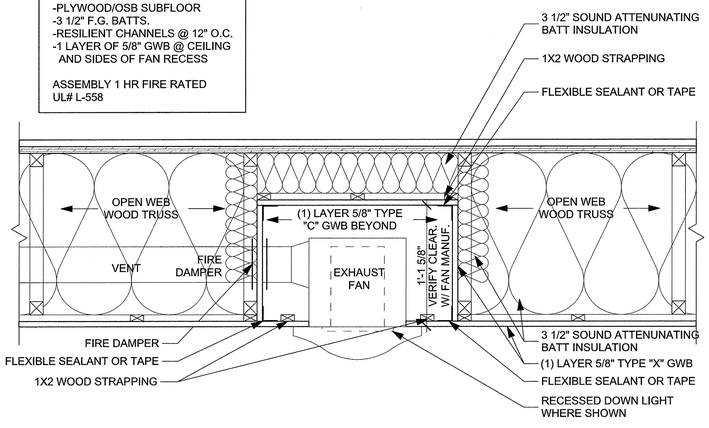

3 DETAIL AT FAN/LIGHT

SCALE: 1 1/2"= 1'-0"

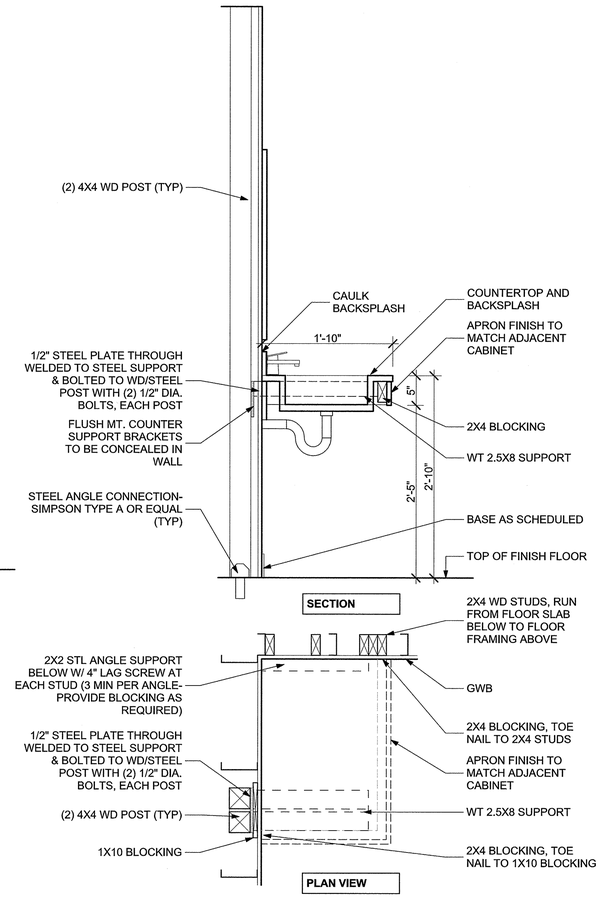

1 TYPICAL DETAILS AT TYPE B VANITY

SCALE: 1" = 1'-0"

KEY AND MOUNTING HEIGHT SCHEDULE

KEY	FIXTURE / ACCESSORY	ANSI 117.1 (TYPE B)	ANSI 117.1 (TYPE A)	MANUFACTURER MODEL #
A	MIRROR (2'-0")	BOTTOM OF REFLECTING SURFACE @ 40" AFF		
B	MEDICINE CABINET	BOTTOM @ 42" MAX. A.F.F.	TOP @ 48" MAX A.F.F. BOTTOM @ 15" MIN A.F.F.	
C	TOILET PAPER DISPENSER	CL OF DISPENSER @ 14" - 19" A.F.F. CL OF DISPENSER @ 7" - 9" BEYOND FRONT OF TOILET		
D	LIGHT FIXTURE	CL @ 82" AFF	CL @ 80" AFF	REFER TO LIGHT FIXTURE SCHEDULE
F	HAND-HELD SHOWER SYSTEM w/ 60" HOSE ATTACHED TO 36" ADJUSTABLE MOUNTING BAR AND MIXING VALVE	(N/A)	TUB & SHOWER: BOTTOM OF MOUNTING BAR @ 40" A.F.F.	REFER TO PLUMBING FIXTURE SCHEDULE
G	GRAB BAR (12") HORIZONTAL	(N/A)	TOP @ 34" A.F.F. WHERE TWO GRAB BARS ARE PROVIDED, THE SECOND SHALL BE 9" ABOVE RIM OF BATHTUB TO TOP	
	GRAB BAR (24") HORIZONTAL			
	GRAB BAR (36") HORIZONTAL			
	GRAB BAR (42") HORIZONTAL			
	GRAB BAR (48") HORIZONTAL			
	GRAB BAR (18") VERTICAL		CL @ 4'-0" A.F.F.	
	GRAB BAR SWING-UP		TOP @ 36" MAX A.F.F.	
H	DOUBLE ROBE HOOK	TOP @ 60" A.F.F.	TOP @ 48" A.F.F.	
J	SHOWER ROD (60")	CL @ 78" A.F.F.		
K	TUB SPOUT	CL @ 23" A.F.F.		
L	SHOWER HEAD	CL @ 78" A.F.F.		
M	MIXING VALVE	TUB: CL @ 40" A.F.F. OF TUB	CL @ 28" A.F.F. OF TUB, LOCATE ON SHORT WALL SEE NOTE 16	
		SHOWER: CL @ 38-48" A.F.F. OF SHOWER	CL @ 38-48" A.F.F. OF SHOWER, CENTER ON LONG WALL	
N	HAND-HELD SHOWER ON ADJUSTABLE TRACK (59" LONG HOSE)	N/A	BOTTOM OF TRACK @ 40" ABOVE BATHTUB/SHOWER FLOOR	REFER TO PLUM. DWGS.
P	TOWEL BAR (24")	CL @ 42" & 62" A.F.F.	CL @ 36" & 56" A.F.F.	
Q	BATHTUB	RIM @ 16"-18" A.F.F.		
R	TOILET	TOP OF SEAT @ 17" A.F.F.		
S	SHOWER SEAT	(N/A)	TOP @ 17"-19" A.F.F.	
T	MULTI-ROLL T.P. DISPENSER	(N/A)	CL OF ROLL @ 24" A.F.F.; SIDE WALL CLOSEST TO TOILET	
U	PAPER TOWEL DISPENSER / WASTE RECEPTACLE	(N/A)	CL OF TOWEL SLOT @ 42" MAX AFF	
V	SOAP DISPENSER	48" A.F.F		
W	MIRROR	40" MAX. A.F.F		
X	SINGLE ROBE HOOK	TOP @ 60" A.F.F		
Y	WASTE BASKET			
A1	PAPER TOWEL DISPENSER	48" MAX. A.F.F		
A2	PAPER TOWEL MATE	48" MAX. A.F.F		

BATH GENERAL NOTES:

1) SEE ACCESSORY KEY & MOUNTING HEIGHT SCHEDULE FOR ALL MOUNTING HEIGHTS.

2) WALL REINFORCEMENT REQUIRED AT ALL ACCESSORY LOCATIONS.

3) WALL BOARD TO EXTEND TO FLOOR BEHIND BATHTUB FOR CONTINUITY OF FIRE/SMOKE RATING.

4) DOOR LOCATION(S) MAY VARY. REFER TI UNIT PLANS.

5) REFER TO SKETCH FOR TILE TERMINATION.

6) PROVIDE CERAMIC TILE ON CEM.BD. @TUB ENCLOSURE. SEE SPECIFICATIONS FOR TILE TERMINATION.

7) UNLESS OTHERWISE NOTED, PROVIDE PAINTED MOISTURE-RESISTANT GWB @ BATHROOM WALLS, CEILINGS, WET CHASES, TYP.

8) ALL FINISHES (CT, FLOORING, BASE, PAINT) TO CONTINUE UNDER AND BEHIND CABINET.

BATH ACCESSORY NOTES:

9) REFER TO PLUMBING DRAWINGS AND SPECIFICATIONS FOR FIXTURE MANUFACTURERS AND MODEL NUMBERS, VERIFY ROUGH-IN REQUIREMENTS FOR TUB AND PLUMBING SYSTEMS FROM APPROVED MANUFACTURER OF FIXTURES PRIOR TO PARTITON FRAMING INSTALLATION.

10) GRAB BARS TO BE INSTALLED AT TYPE 'A' UNITS IN BUILDINGS

11) 42.5.3:
BLOCKING TO BE PROVIDED WHERE SPECIFIED IN FLOOR PLANS/ROOM ELEVATIONS: "WALLS ADJACENT TO AND BEHIND THE WATER CLOSET SHALL BE CAPABLE OF STRUCTURALLY SUPPORTING THE FUTURE INSTALLATION OF GRAB BARS FROM 32" TO 38" ABOVE THE FLOOR. THE BACK WALL SHALL HAVE REINFORCEMENT FROM THE INTERIOR CORNER TO A DISTANCE OF 6" BEYOND THE WIDEST PART OF THE WATER CLOSET. THE SIDE WALL SHALL HAVE REINFORCEMENT FROM THE INTERIOR CORNER TO A DISTANCE OF 6" BEYOND THE FRONT EDGE OF THE WATER CLOSET, UNLESS INTERRUPTED BY A DOOR OR OTHER FIXTURE, THEN THE REINFORCEMENT SHALL BE INSTALLED AS FAR AS POSSIBLE."

12) 44.7.1.c:
"ALL TUB WALLS SHALL BE CAPABLE OF STRUCTURALLY SUPPORTING THE FUTURE INSTALLATION OF GRAB BARS FROM 6" ABOVE THE TUB RIM TO A HEIGHT OF 48" ABOVE THE TUB BOTTOM AND SHALL EXTEND THE LENGTH AND WIDTH OF THE TUB."

13) 42.7.2.c:
"ALL SHOWER WALLS SHALL BE CAPABLE OF STRUCTURALLY SUPPORTING THE FUTURE INSTALLATION OF GRAB BARS, SEATS, ETC., FROM A HEIGHT OF 6" TO 48" ABOVE THE FLOOR AND SHALL EXTEND THE FULL WIDTH AND LENGTH OF THE SHOWER STALL. GRAB BARS SHALL NOT BE LOCATED BEHIND THE SEAT."

14) 44.6.1.c
"ALL WALLS OF THE TUB SHALL HAVE STRUCTURAL REINFORCEMENT TO ALLOW THE FUTURE INSTALLATION OF GRAB BARS AT ANY LOCATION FROM THE RIM OF THE TUB TO A HEIGHT OF 60" ABOVE THE TUB BOTTOM."

15) 44.6.2.b
"ALL WALLS OF THE SHOWER SHALL HAVE STRUCTURAL REINFORCEMENT TO ALLOW THE FUTURE INSTALLATION OF A SEAT AND GRAB BARS, AT ANY LOCATION FROM THE FLOOR TO A HEIGHT OF 60" ABOVE THE FLOOR."

16)CITATION
"FAUCETS AND MIXING VALVES SHALL BE CENTERED HORIZONTALLY ON THE LONG WALL OF THE SHOWER, 28 INCHES ABOVE THE FLOOR." TUB FAUCETS AND MIXING VALVES SEE A510. DETAIL. 5.

Washington Village Phase 1

20 Day Street Building B

Norwalk, CT

Trinity Washington Village Limited Partnership
&
the Norwalk Housing Authority

E-ICON ARCHITECTURE
101 SUMMER ST BOSTON MA 02110
617-451-3333 www.iconarch.com

CONSULTANT

STAMP



MARK	DATE	DESCRIPTION
	09-15-2014	PERMIT/ PRICING
	06-13-2014	PRICING
	11-18-2013	40% CHFA
	09-19-2013	CAM/ SPECIAL PERMIT

PROJECT NO.: 21222
DRAWN BY: JR/ RA
CHECKED BY: KH/ DW

SHEET TITLE

BATH DETAILS

A-514

9/19/2014 5:29 PM

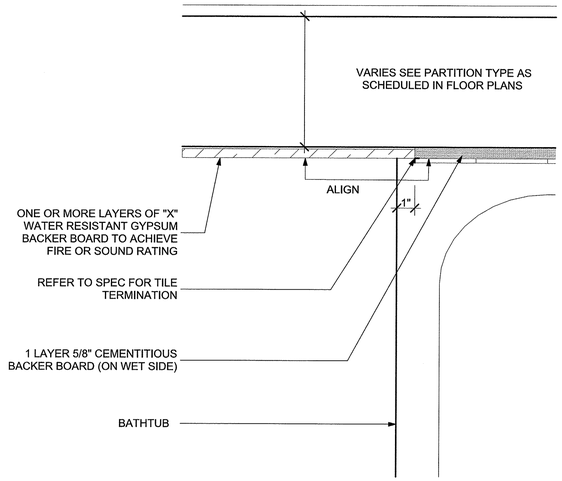

8 NON FIRE RATED PLAN DETAIL
SCALE: 3" = 1'-0"

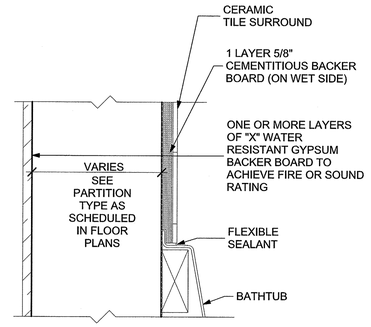

7 NON FIRE RATED BATH DETAIL
SCALE: 3" = 1'-0"

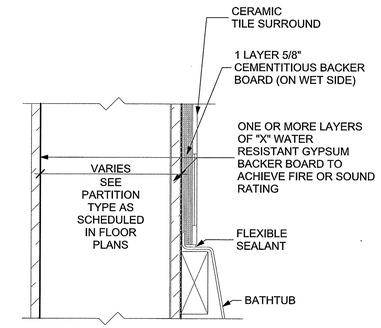

6 FIRE RATED BATH DETAIL
SCALE: 3" = 1'-0"

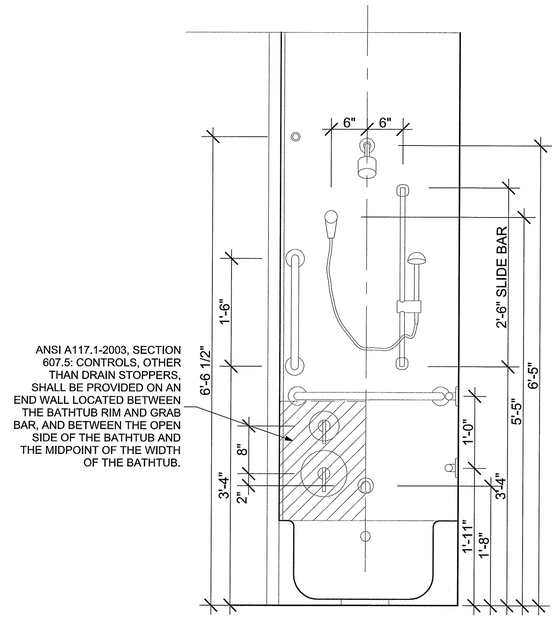

5 SHOWER MOUNTING HEIGHTS
SCALE: 1" = 1'-0"

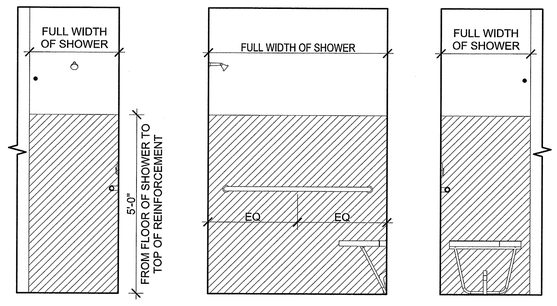

4 WALL REINF. AT SHOWER (TYPE A)
SCALE: 1/2" = 1'-0"

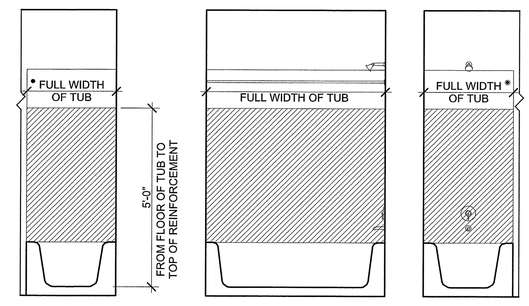

2 WALL REINF. AT TUB (TYPE A)
SCALE: 1/2" = 1'-0"

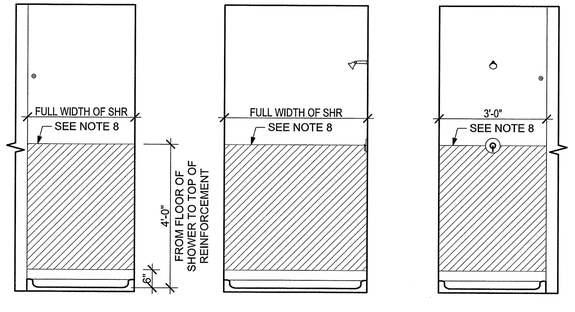

3 WALL REINF. AT SHOWER (TYPE B)
SCALE: 1/2" = 1'-0"

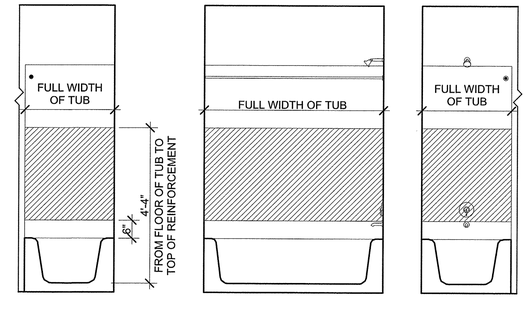

1 WALL REINF. AT TUB (TYPE B)
SCALE: 1/2" = 1'-0"

Washington Village Phase 1

20 Day Street Building B

Norwalk, CT

Trinity Washington Village Limited Partnership
&
the Norwalk Housing Authority

E-ICON ARCHITECTURE
101 SUMMER ST BOSTON MA 02110
617-451-3333 www.iconarch.com

CONSULTANT

STAMP

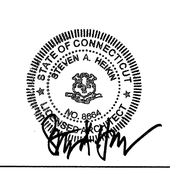

MARK	DATE	DESCRIPTION
	09-15-2014	PERMIT/ PRICING
	06-13-2014	PRICING
	11-18-2013	40% CHFA
	09-19-2013	CAM/ SPECIAL PERMIT

PROJECT NO.: 21222
DRAWN BY: JR/ RA
CHECKED BY: KH/ DW

SHEET TITLE

BATH DETAILS

A-515

9/19/2014 3:29 PM

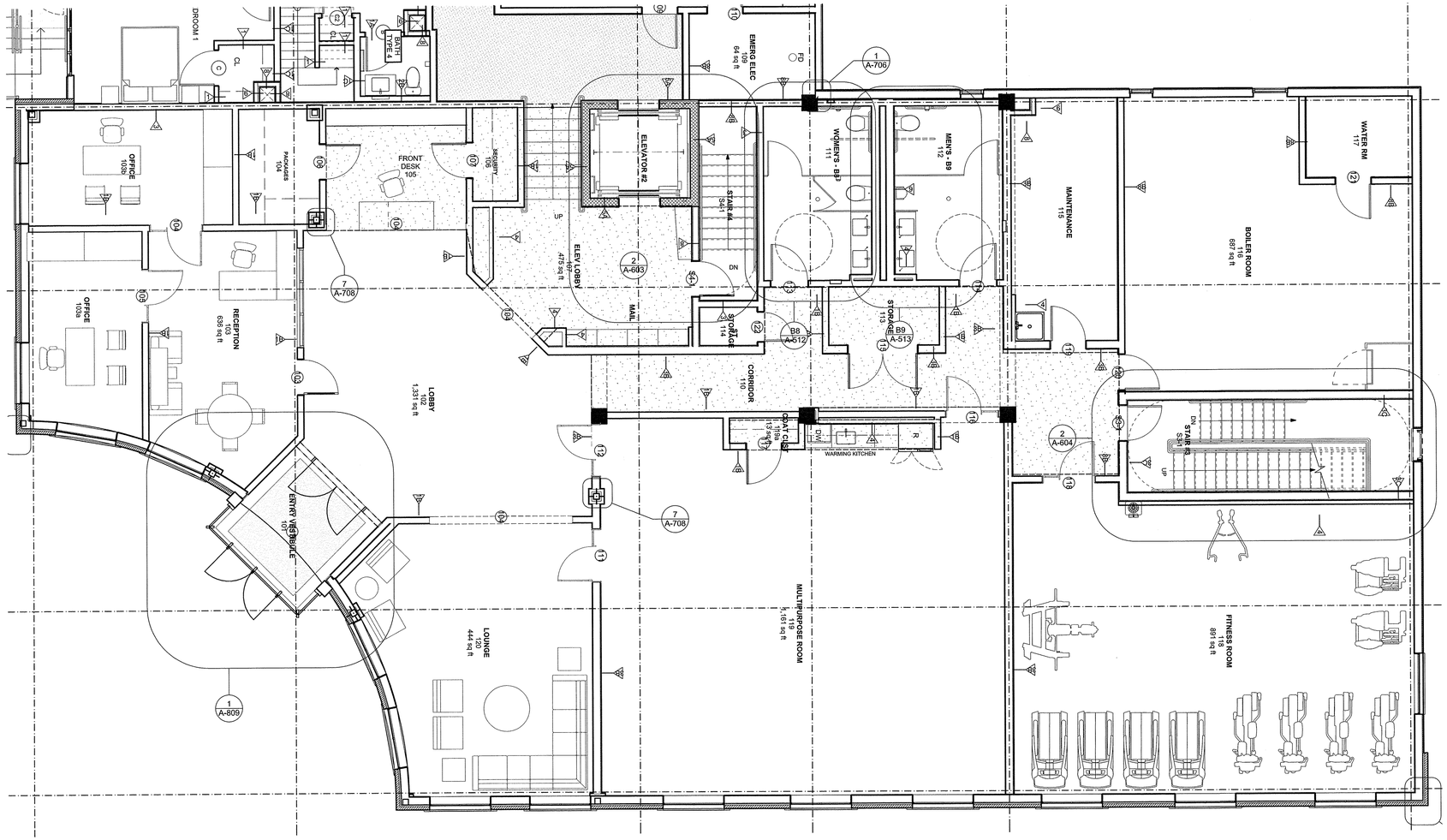

Washington Village Phase 1

20 Day Street Building B

Norwalk, CT

Trinity Washington Village Limited Partnership
&
the Norwalk Housing Authority

E-ICON ARCHITECTURE
101 SUMMER ST BOSTON MA 02110
617-451-3333 www.iconarch.com

CONSULTANT

STAMP

STATE OF CONNECTICUT
STEVEN A. HEIMAN
NO. 8654
LICENSED ARCHITECT

MARK	DATE	DESCRIPTION
	09-15-2014	PERMIT/ PRICING
	06-13-2014	PRICING
	11-18-2013	40% CHFA
	09-19-2013	CAM/ SPECIAL PERMIT

PROJECT NO.: 21222
DRAWN BY:
CHECKED BY:

SHEET TITLE

ENLARGED COMMON SPACE PLAN

A-516

9/15/2014 3:58 PM

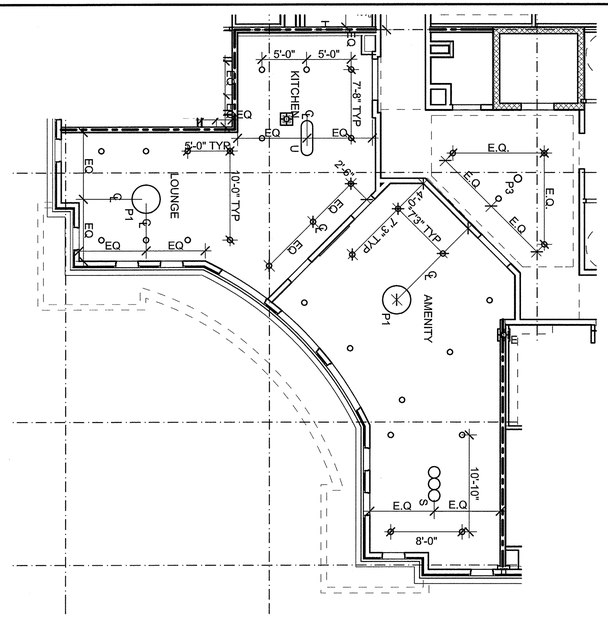

NOTE:

ALL RECESSED FIXTURES IN WOOD FRAMING TO HAVE FIRE-RATED ENCLOSURE

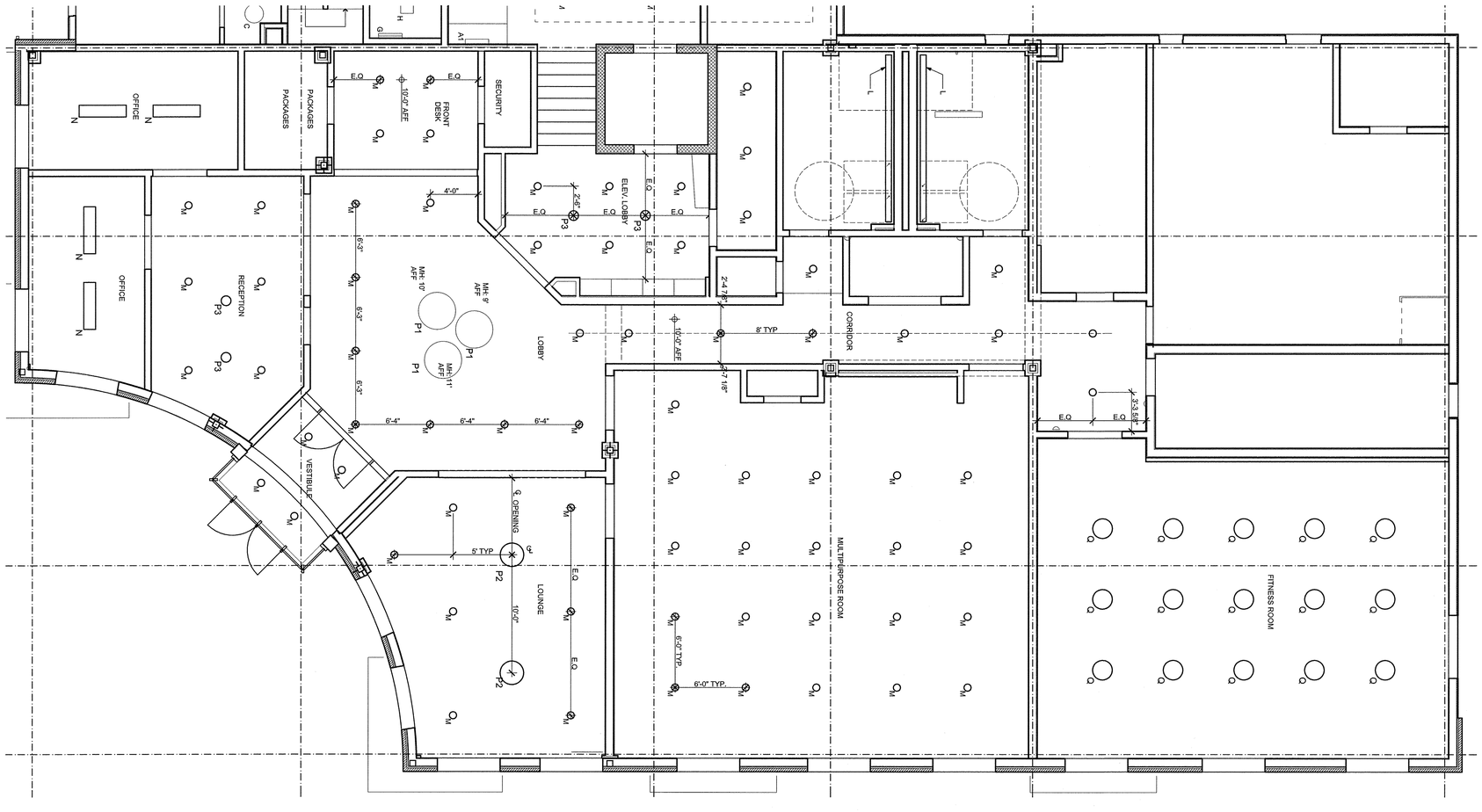

Washington Village Phase 1

20 Day Street Building B

Norwalk, CT

Trinity Washington Village Limited Partnership
&
the Norwalk Housing Authority

E-ICON ARCHITECTURE
101 SUMMER ST BOSTON MA 02110
617-451-3333 www.iconarch.com

CONSULTANT

STAMP

MARK	DATE	DESCRIPTION
	09-15-2014	PERMIT/ PRICING
	06-13-2014	PRICING
	11-18-2013	40% CHFA
	09-19-2013	CAM/ SPECIAL PERMIT

PROJECT NO.: 21222
DRAWN BY: PG
CHECKED BY:

SHEET TITLE

REFLECTED CEILING PLAN - LOBBY AND CLUBROOM

A-517

9/18/2014 3:29 PM

NOTE:

ALL RECESSED FIXTURES IN WOOD FRAMING TO HAVE FIRE-RATED ENCLOSURE

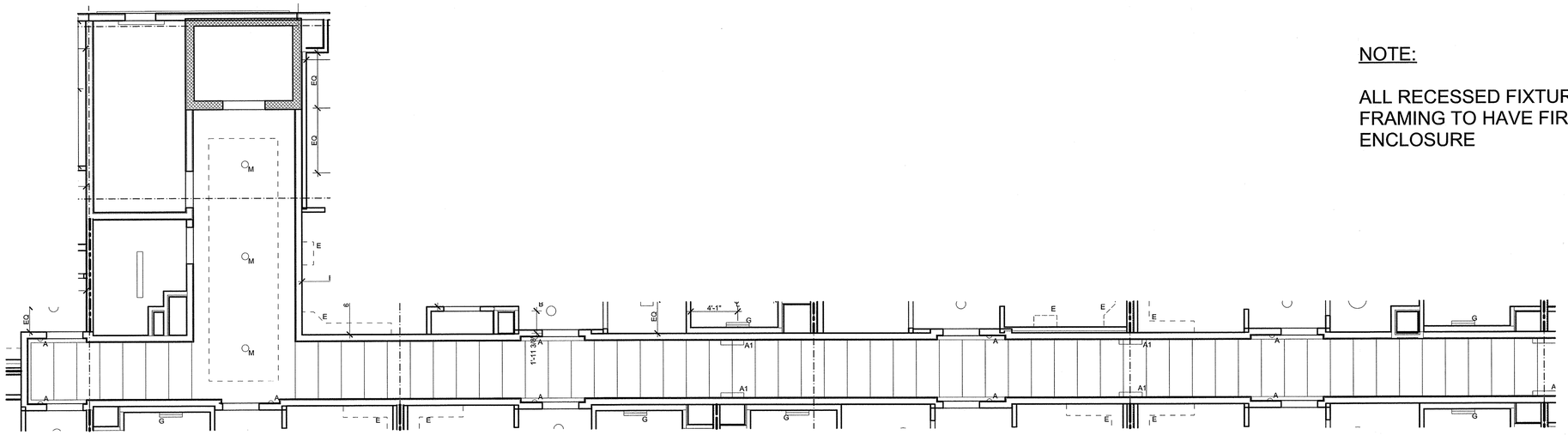

2 COMMON SPACE REFLECTED CEILING PLAN

SCALE: 3/16" = 1'-0"

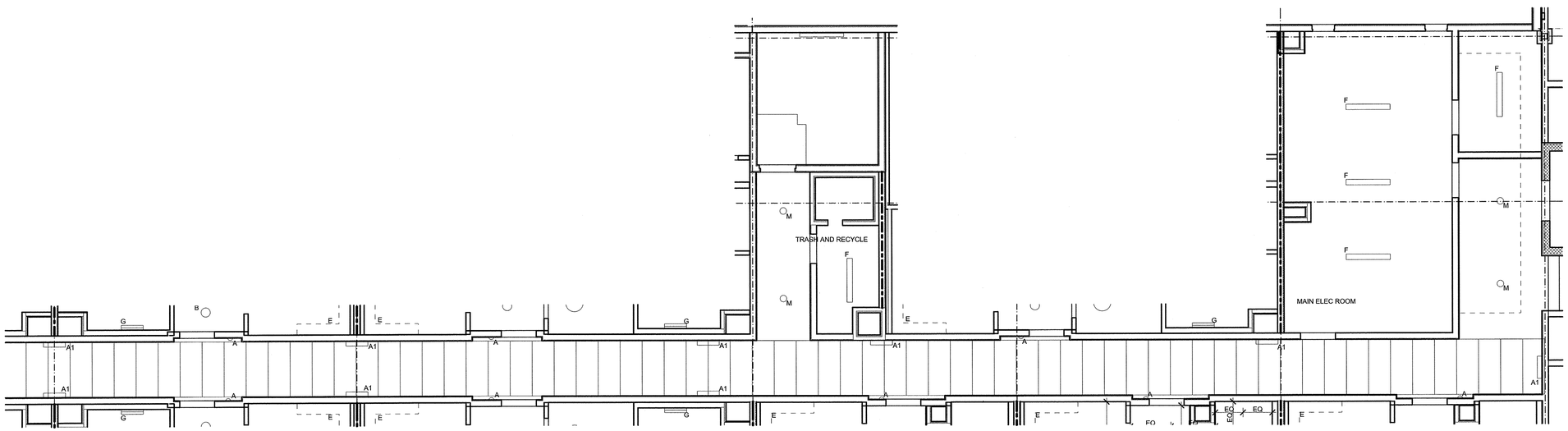
TRASH AND RECYCLE
MAIN ELEC ROOM
M
M
M
M
F
F
F
F
F
F
G
B
E
E
G
G
G
G
A
A1
A
A1
A
A1

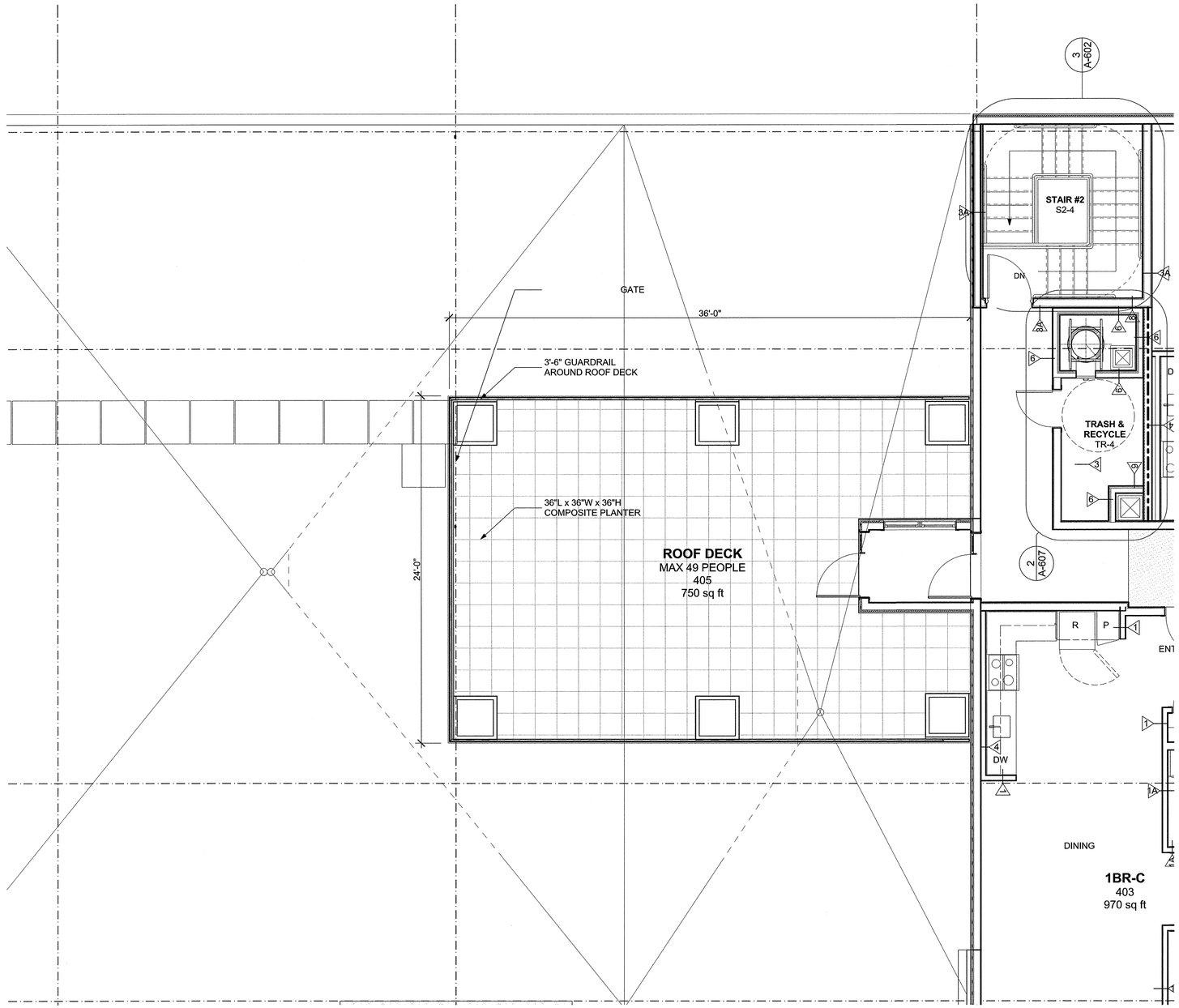

1 ROOF DECK ENLARGED PLAN

SCALE: 1/4" = 1'-0"

Washington Village Phase 1

20 Day Street Building B

Norwalk, CT

Trinity Washington Village Limited Partnership
&
the Norwalk Housing Authority

E-ICON ARCHITECTURE
101 SUMMER ST BOSTON MA 02110
617-451-3333 www.iconarch.com

CONSULTANT

STAMP

STATE OF CONNECTICUT · STEVEN A. HEIKIN · NO. 8664 · REGISTERED ARCHITECT

MARK	DATE	DESCRIPTION
	09-15-2014	PERMIT/ PRICING
	06-13-2014	PRICING
	11-18-2013	40% CHFA
	09-19-2013	CAM/ SPECIAL PERMIT

PROJECT NO.: 21222
DRAWN BY: SO, BD
CHECKED BY:

SHEET TITLE

ROOF DECK ENLARGED PLAN

A-519

9/18/2014 3:26 PM

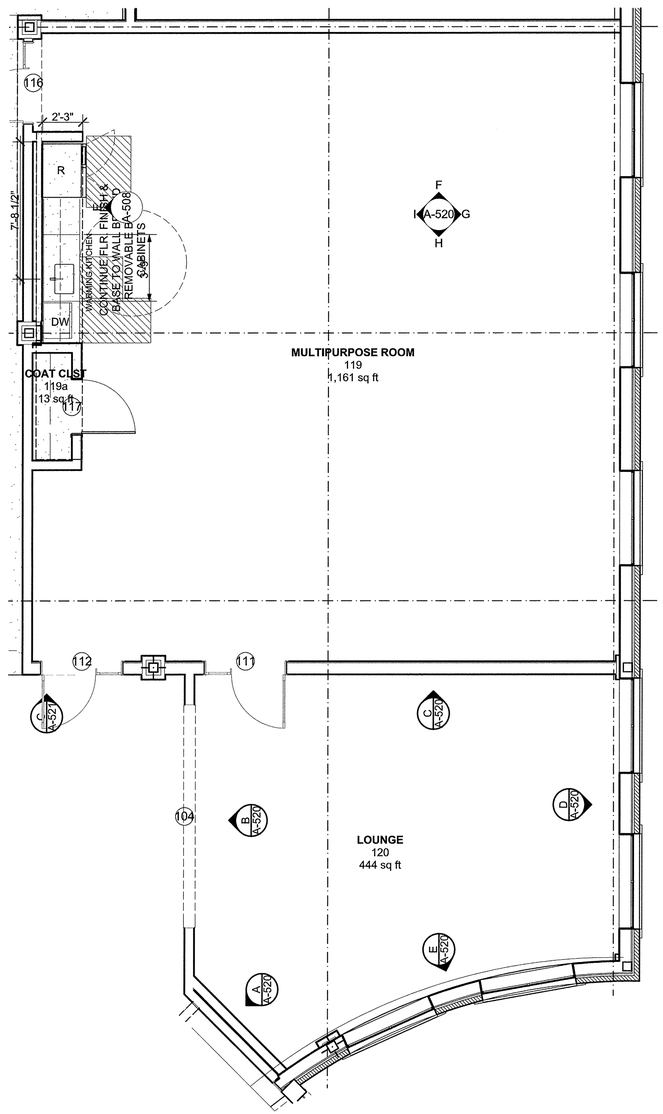

2 FIRST FLOOR
SCALE: 1/4" = 1'-0"

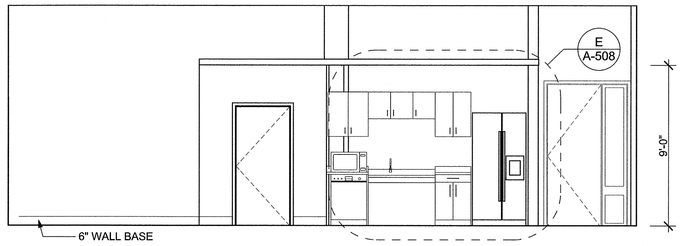

I MULTIPURPOSE ROOM ELEVATION
SCALE: 1/4" = 1'-0"

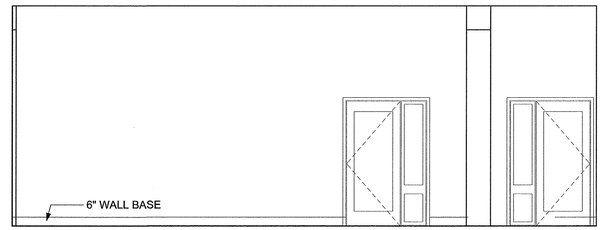

H MULTIPURPOSE ROOM ELEVATION
SCALE: 1/4" = 1'-0"

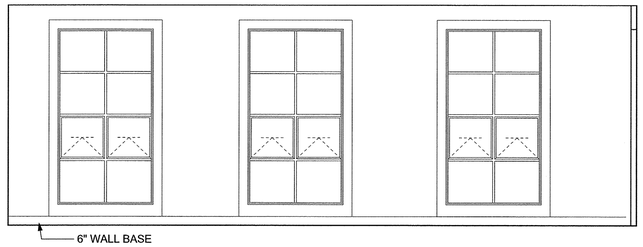

G MULTIPURPOSE ROOM ELEVATION
SCALE: 1/4" = 1'-0"

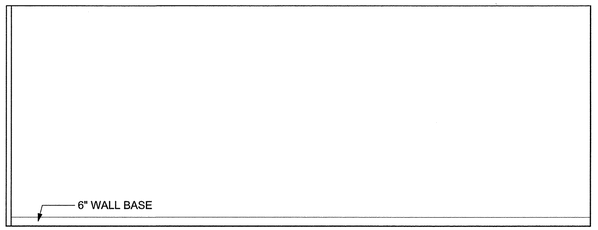

F MULTIPURPOSE ROOM ELEVATION
SCALE: 1/4" = 1'-0"

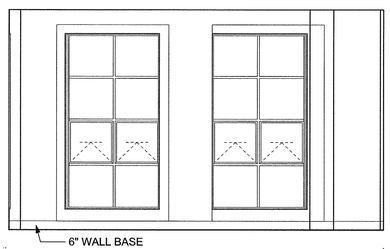

E LOUNGE ELEVATION
SCALE: 1/4" = 1'-0"

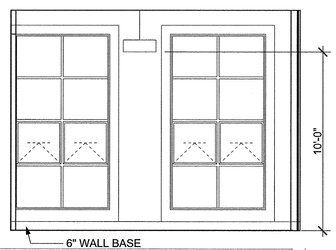

D LOUNGE ELEVATION
SCALE: 1/4" = 1'-0"

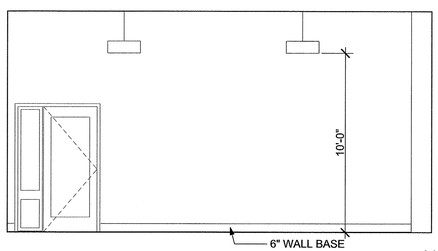

C LOUNGE ELEVATION
SCALE: 1/4" = 1'-0"

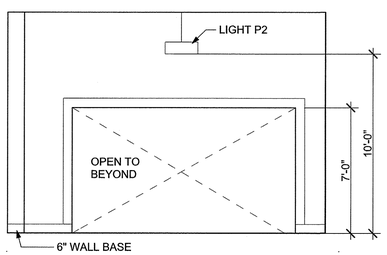

B LOUNGE ELEVATION
SCALE: 1/4" = 1'-0"

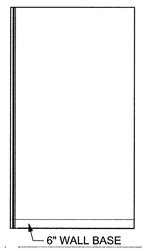

A LOUNGE ELEVATION
SCALE: 1/4" = 1'-0"

Washington Village Phase 1

20 Day Street Building B

Norwalk, CT

Trinity Washington Village Limited Partnership
&
the Norwalk Housing Authority

E-ICON ARCHITECTURE
101 SUMMER ST BOSTON MA 02110
617-451-3333 www.iconarch.com

CONSULTANT

STAMP



MARK	DATE	DESCRIPTION
	09-15-2014	PERMIT/ PRICING
	06-13-2014	PRICING
	11-18-2013	40% CHFA
	09-19-2013	CAM/ SPECIAL PERMIT

PROJECT NO.: 21222
DRAWN BY: SO
CHECKED BY:

SHEET TITLE

INTERIOR ELEVATIONS

A-520

9/18/2014 3:29 PM

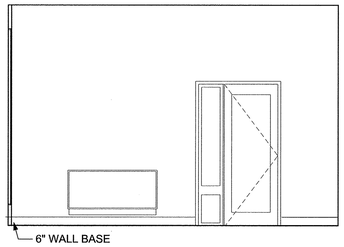

K RECEPTION ELEVATION
SCALE: 1/4" = 1'-0"

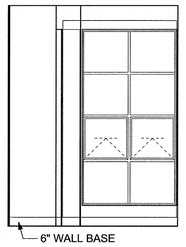

J RECEPTION ELEVATION
SCALE: 1/4" = 1'-0"

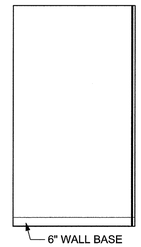

I RECEPTION ELEVATION
SCALE: 1/4" = 1'-0"

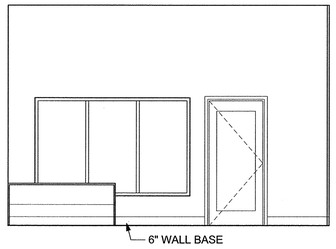

H RECEPTION ELEVATION
SCALE: 1/4" = 1'-0"

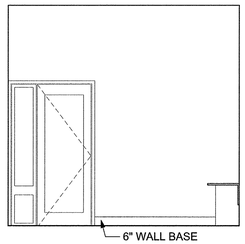

G RECEPTION ELEVATION
SCALE: 1/4" = 1'-0"

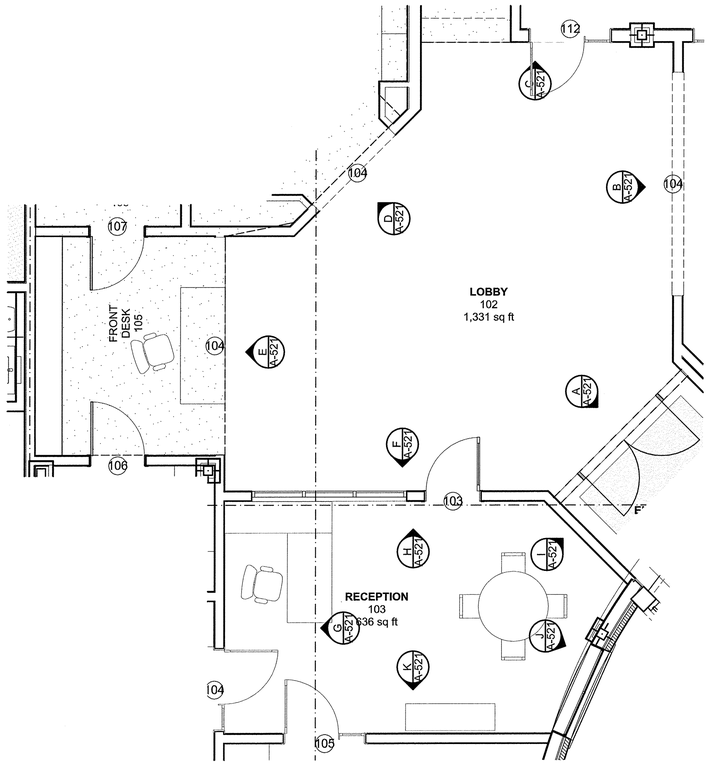

1 LOBBY (102) / RECEPTION (103)
SCALE: 1/4" = 1'-0"

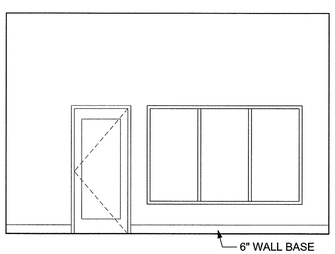

F LOBBY ELEVATION
SCALE: 1/4" = 1'-0"

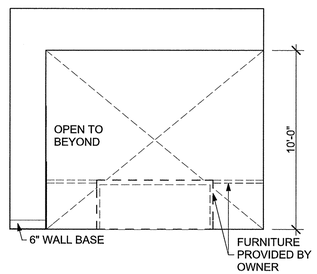

E LOBBY ELEVATION
SCALE: 1/4" = 1'-0"

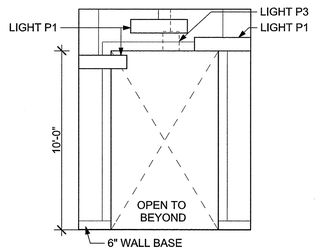

D LOBBY ELEVATION
SCALE: 1/4" = 1'-0"

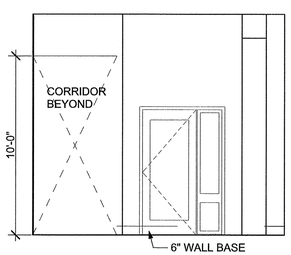

C LOBBY ELEVATION
SCALE: 1/4" = 1'-0"

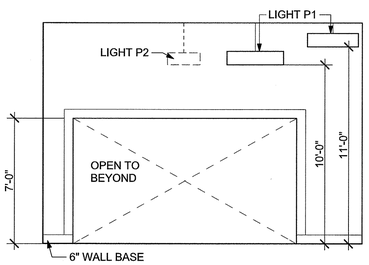

B LOBBY ELEVATION
SCALE: 1/4" = 1'-0"

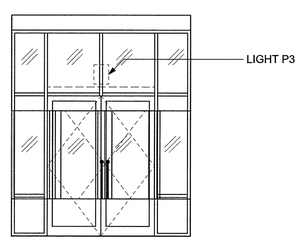

A LOBBY ELEVATION
SCALE: 1/4" = 1'-0"

Washington Village Phase 1

20 Day Street Building B

Norwalk, CT

Trinity Washington Village Limited Partnership
&
the Norwalk Housing Authority

E-ICON ARCHITECTURE
101 SUMMER ST BOSTON MA 02110
617-451-3333 www.iconarch.com

CONSULTANT

STAMP



MARK	DATE	DESCRIPTION
	09-15-2014	PERMIT/ PRICING
	06-13-2014	PRICING
	11-18-2013	40% CHFA
	09-19-2013	CAM/ SPECIAL PERMIT

PROJECT NO.: 21222
DRAWN BY: SO
CHECKED BY:

SHEET TITLE

INTERIOR ELEVATIONS

A-521

9/18/2014 3:29 PM

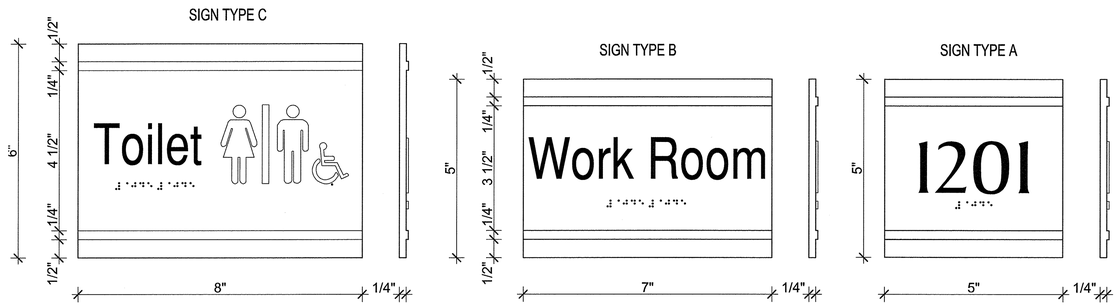

7 DOOR TAG
SCALE: 6" = 1'-0"

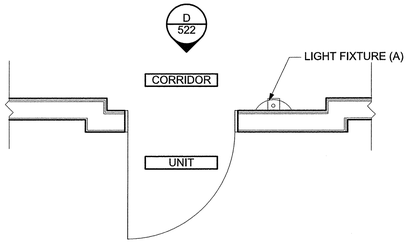

2 TYP. INT. UNIT ENTRY PLAN
SCALE: 1/2" = 1'-0"

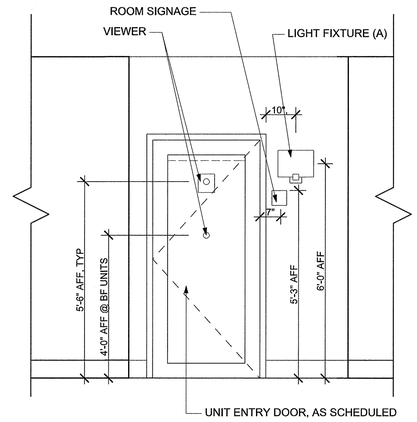

D TYP. INT. UNIT ENTRY ELEVATION
SCALE: 1/2" = 1'-0"

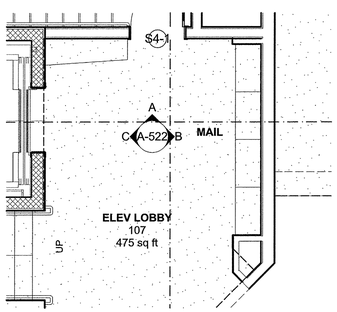

1 MAIL ROOM
SCALE: 1/4" = 1'-0"

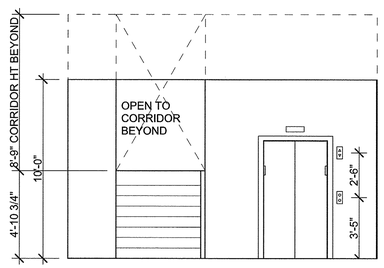

C MAIL ROOM
SCALE: 1/4" = 1'-0"

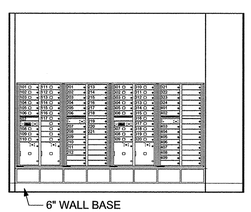

B MAIL ROOM ELEVATION
SCALE: 1/4" = 1'-0"

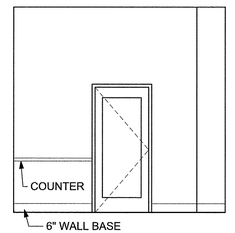

A MAIL ROOM ELEVATION
SCALE: 1/4" = 1'-0"

Washington Village Phase 1

20 Day Street
Building B

Norwalk, CT

Trinity Washington Village Limited Partnership
&
the Norwalk Housing Authority

E-ICON ARCHITECTURE
101 SUMMER ST BOSTON MA 02110
617-451-3333 www.iconarch.com

CONSULTANT

STAMP



MARK	DATE	DESCRIPTION
	09-15-2014	PERMIT/ PRICING
	06-13-2014	PRICING
	11-18-2013	40% CHFA
	09-19-2013	CAM/ SPECIAL PERMIT

PROJECT NO.: 21222
DRAWN BY:
CHECKED BY:

SHEET TITLE

INTERIOR ELEVATIONS

A-522

9/15/2014 3:29 PM

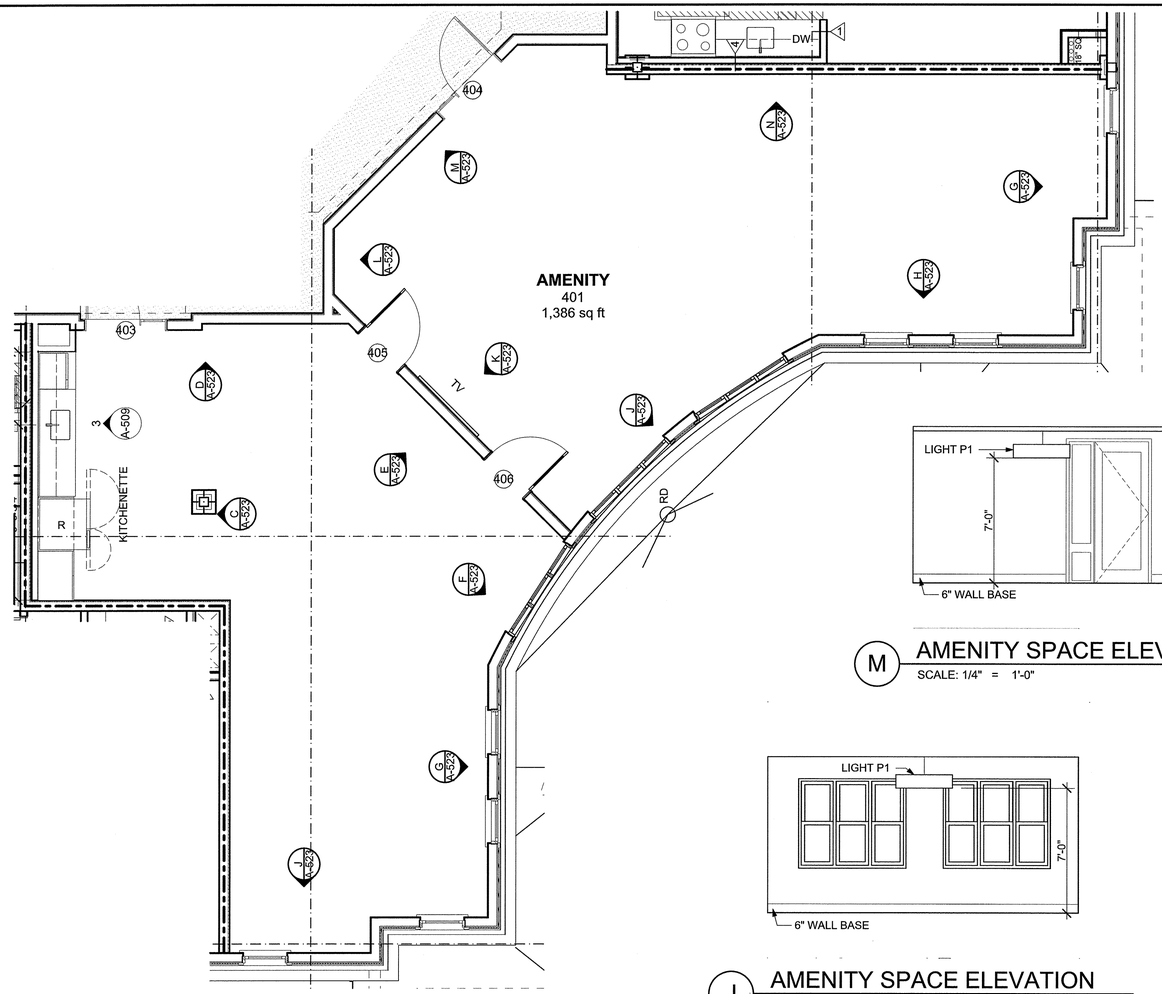

1 FOURTH FLOOR AMENITY SPACE - KITCHEN
SCALE: 1/4" = 1'-0"

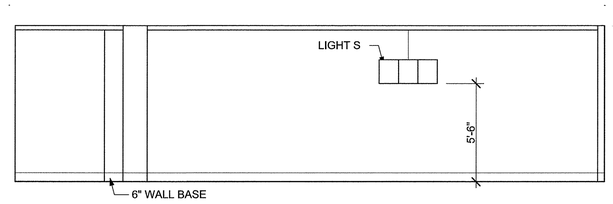

N AMENITY SPACE ELEVATION
SCALE: 1/4" = 1'-0"

M AMENITY SPACE ELEVATION
SCALE: 1/4" = 1'-0"

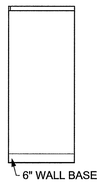

L AMENITY SPACE ELEVATION
SCALE: 1/4" = 1'-0"

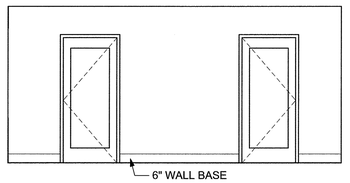

K AMENITY SPACE ELEVATION
SCALE: 1/4" = 1'-0"

J AMENITY SPACE ELEVATION
SCALE: 1/4" = 1'-0"

H AMENITY SPACE ELEVATION
SCALE: 1/4" = 1'-0"

G AMENITY SPACE ELEVATION
SCALE: 1/4" = 1'-0"

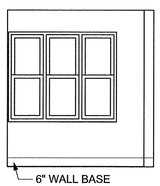

F AMENITY SPACE ELEVATION
SCALE: 1/4" = 1'-0"

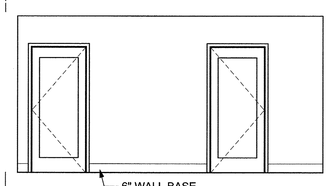

E AMENITY SPACE ELEVATION
SCALE: 1/4" = 1'-0"

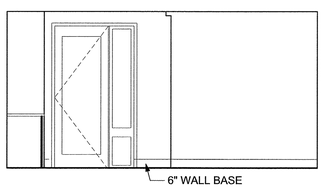

D AMENITY SPACE ELEVATION
SCALE: 1/4" = 1'-0"

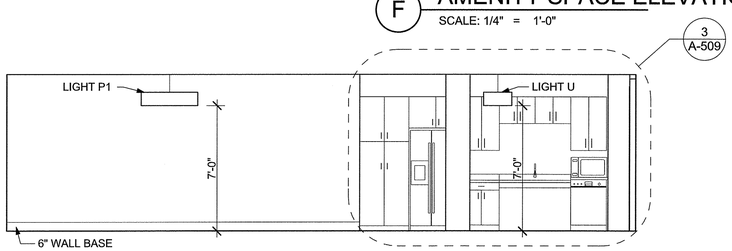

C AMENITY SPACE ELEVATION
SCALE: 1/4" = 1'-0"

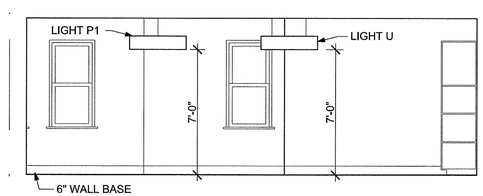

B AMENITY SPACE ELEVATION
SCALE: 1/4" = 1'-0"

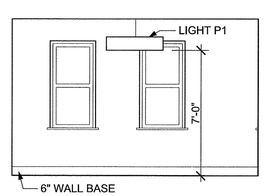

A AMENITY SPACE ELEVATION
SCALE: 1/4" = 1'-0"

Washington Village Phase 1

20 Day Street Building B

Norwalk, CT

Trinity Washington Village Limited Partnership
&
the Norwalk Housing Authority

E-ICON ARCHITECTURE
101 SUMMER ST BOSTON MA 02110
617-451-3333 www.iconarch.com

CONSULTANT

STAMP

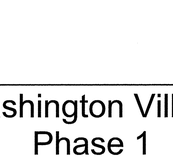

MARK	DATE	DESCRIPTION
	09-15-2014	PERMIT/ PRICING
	06-13-2014	PRICING
	11-18-2013	40% CHFA
	09-19-2013	CAM/ SPECIAL PERMIT

PROJECT NO.: 21222
DRAWN BY:
CHECKED BY:

SHEET TITLE

INTERIOR ELEVATIONS

A-523

9/18/2014 3:29 PM

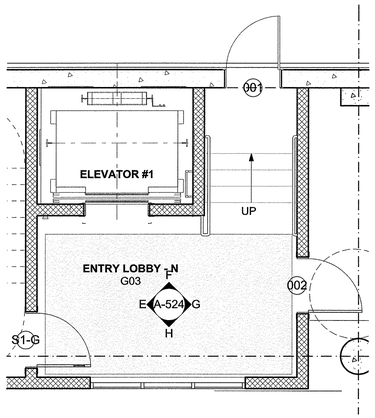

2 ELEV LOBBY (G03)
SCALE: 1/4" = 1'-0"

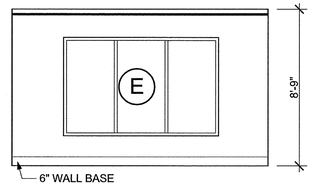

H ELEV LOBBY ELEVATION
SCALE: 1/4" = 1'-0"

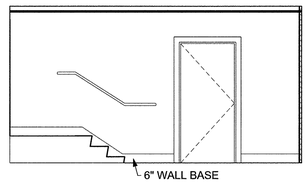

G ELEV LOBBY ELEVATION
SCALE: 1/4" = 1'-0"

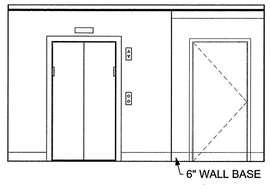

F ELEV LOBBY ELEVATION
SCALE: 1/4" = 1'-0"

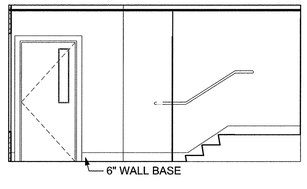

E ELEV LOBBY ELEVATION
SCALE: 1/4" = 1'-0"

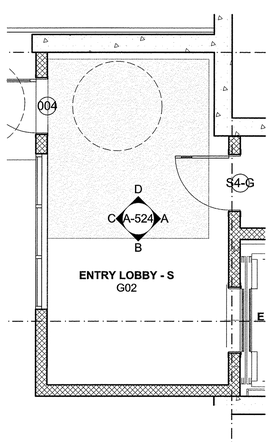

1 ELEV LOBBY (G02)
SCALE: 1/4" = 1'-0"

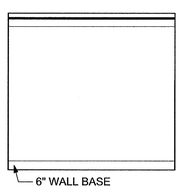

D ELEV LOBBY ELEVATION
SCALE: 1/4" = 1'-0"

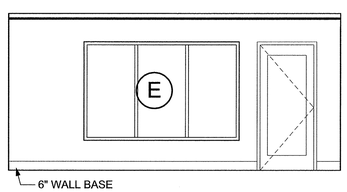

C ELEV LOBBY ELEVATION
SCALE: 1/4" = 1'-0"

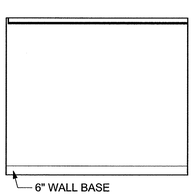

B ELEV LOBBY ELEVATION
SCALE: 1/4" = 1'-0"

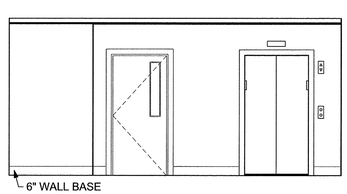

A ELEV LOBBY ELEVATION
SCALE: 1/4" = 1'-0"

Washington Village Phase 1

20 Day Street
Building B

Norwalk, CT

Trinity Washington Village Limited Partnership
&
the Norwalk Housing Authority

E-ICON ARCHITECTURE
101 SUMMER ST BOSTON MA 02110
617-451-3333 www.iconarch.com

CONSULTANT

STAMP

STATE OF CONNECTICUT
STEVEN A. HEIN
NO. 8664
LICENSED ARCHITECT

MARK	DATE	DESCRIPTION
	09-15-2014	PERMIT/ PRICING
	06-13-2014	PRICING
	11-18-2013	40% CHFA
	09-19-2013	CAM/ SPECIAL PERMIT

PROJECT NO.: 21222
DRAWN BY:
CHECKED BY:

SHEET TITLE

INTERIOR ELEVATIONS

A-524

9/15/2014 3:29 PM

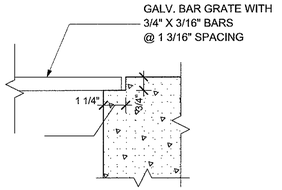

8 GRATE DETAIL
SCALE: 3" = 1'-0"

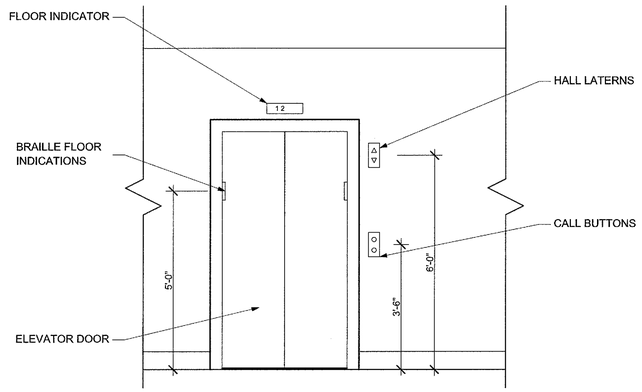

7 ELEVATOR DOOR ELEVATION
SCALE: 1/2" = 1'-0"

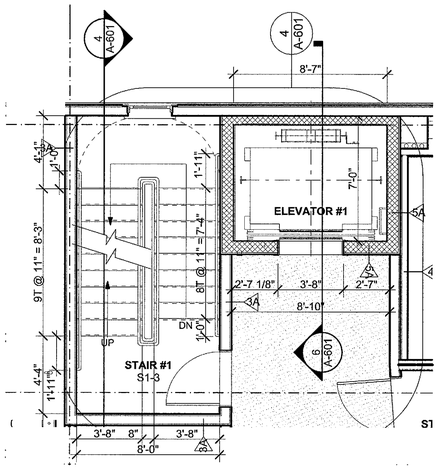

5 THIRD FLOOR
SCALE: 1/4" = 1'-0"

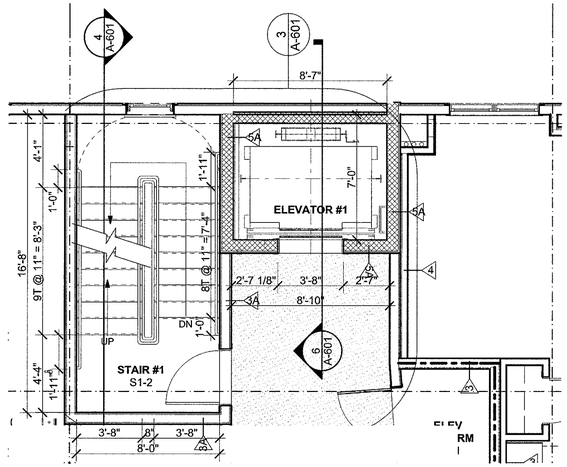

3 SECOND FLOOR
SCALE: 1/4" = 1'-0"

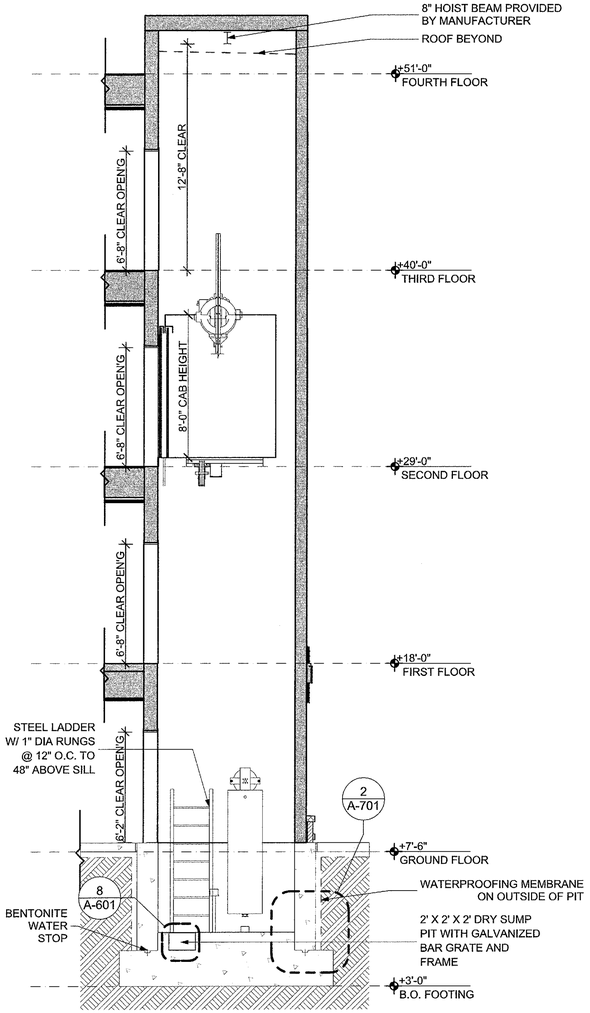

6 ELEVATOR #1 SECTION
SCALE: 1/4" = 1'-0"

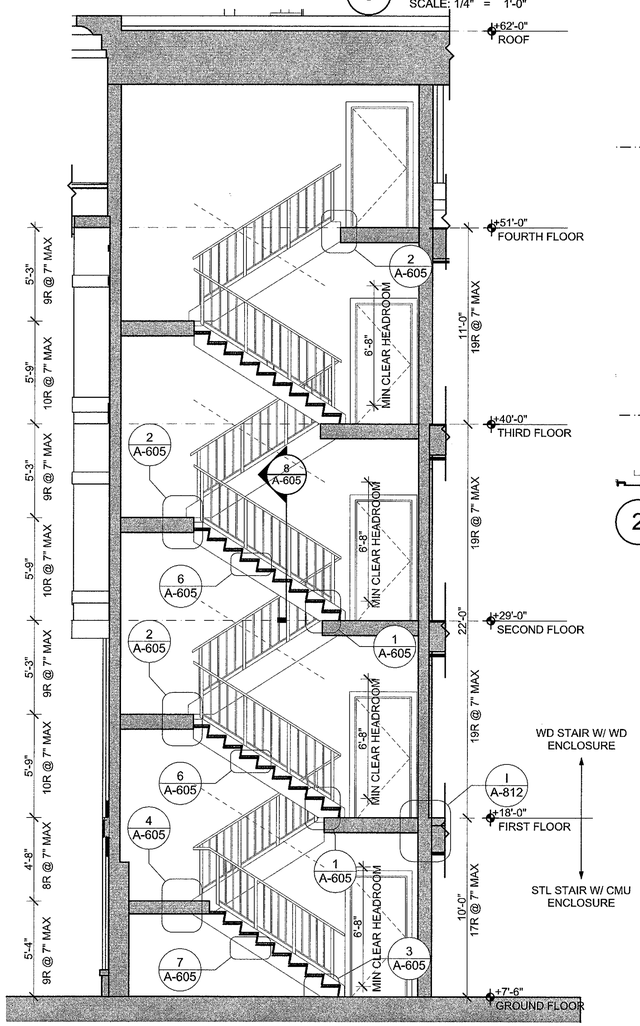

4 STAIR #1 SECTION
SCALE: 1/4" = 1'-0"

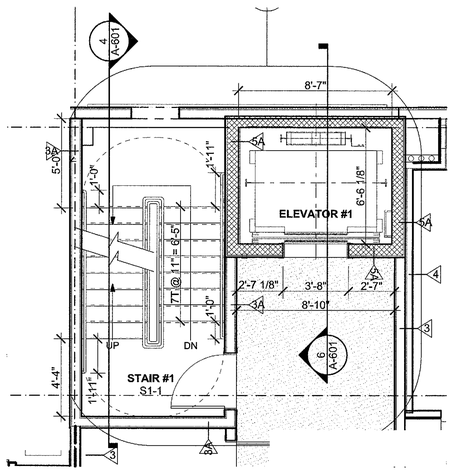

2 FIRST FLOOR
SCALE: 1/4" = 1'-0"

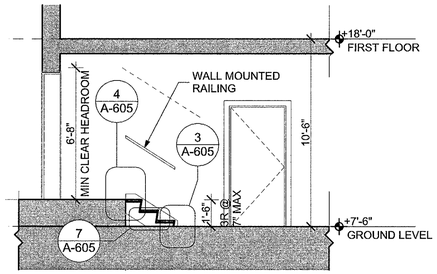

9 STAIR #1B SECTION
SCALE: 1/4" = 1'-0"

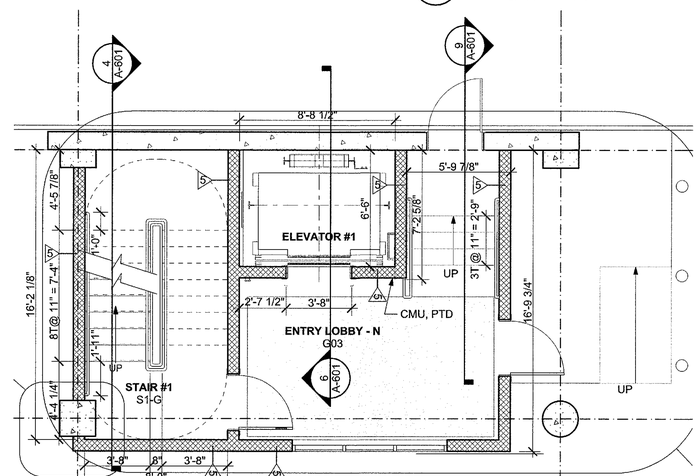

1 GROUND LEVEL
SCALE: 1/4" = 1'-0"

Washington Village Phase 1

20 Day Street Building B

Norwalk, CT

Trinity Washington Village Limited Partnership
&
the Norwalk Housing Authority

E-ICON ARCHITECTURE
101 SUMMER ST BOSTON MA 02110
617-451-3333 www.iconarch.com

CONSULTANT

STAMP

STATE OF CONNECTICUT
STEVEN A. HEWIN
NO. 8664
REGISTERED ARCHITECT

MARK	DATE	DESCRIPTION
	09-15-2014	PERMIT/ PRICING
	06-13-2014	PRICING
	11-18-2013	40% CHFA
	09-19-2013	CAM/ SPECIAL PERMIT

PROJECT NO.: 21222
DRAWN BY: RA, SO
CHECKED BY:

SHEET TITLE

BLDG B STAIR #1 & ELEVATOR #1 PLANS & SECTIONS

A-601

9/19/2014 10:56 PM

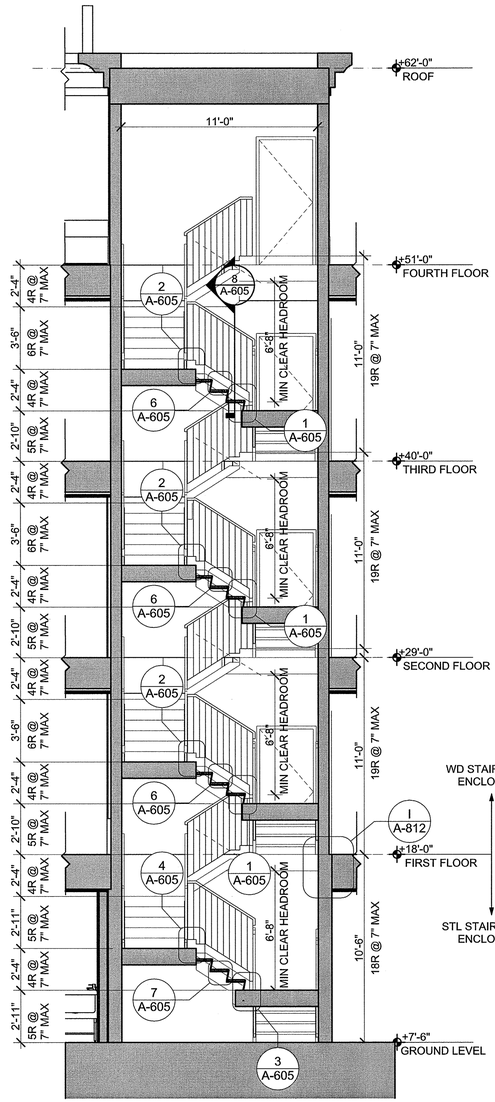

4 STAIR #2 SECTION

SCALE: 1/4" = 1'-0"

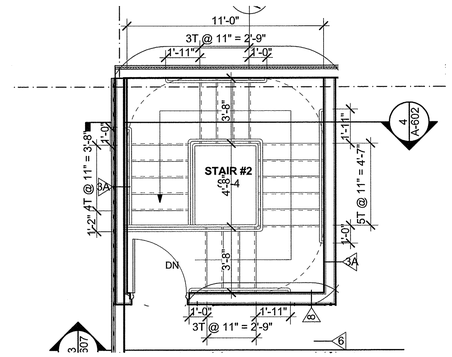

3 STAIR #2 @ FOURTH FLOOR

SCALE: 1/4" = 1'-0"

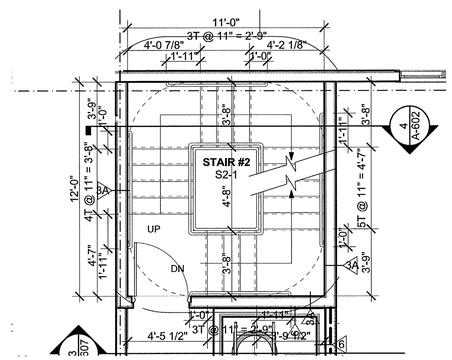

2 STAIR #2 @ TYPICAL FLOOR

SCALE: 1/4" = 1'-0"

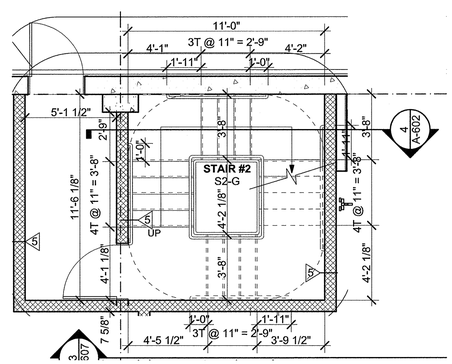

1 STAIR #2 @ GROUND FLOOR

SCALE: 1/4" = 1'-0"

Washington Village Phase 1

20 Day Street Building B

Norwalk, CT

Trinity Washington Village Limited Partnership
&
the Norwalk Housing Authority

E-ICON ARCHITECTURE
101 SUMMER ST BOSTON MA 02110
617-451-3333 www.iconarch.com

CONSULTANT

STAMP

STATE OF CONNECTICUT STEVEN A. REINI LICENSED ARCHITECT NO. 8994

MARK	DATE	DESCRIPTION
	09-15-2014	PERMIT/ PRICING
	06-13-2014	PRICING
	11-18-2013	40% CHFA
	09-19-2013	CAM/ SPECIAL PERMIT

PROJECT NO.: 21222
DRAWN BY: RA
CHECKED BY:

SHEET TITLE

BLDG B STAIR #2
PLANS & SECTIONS

A-602

9/19/2014 3:39 PM

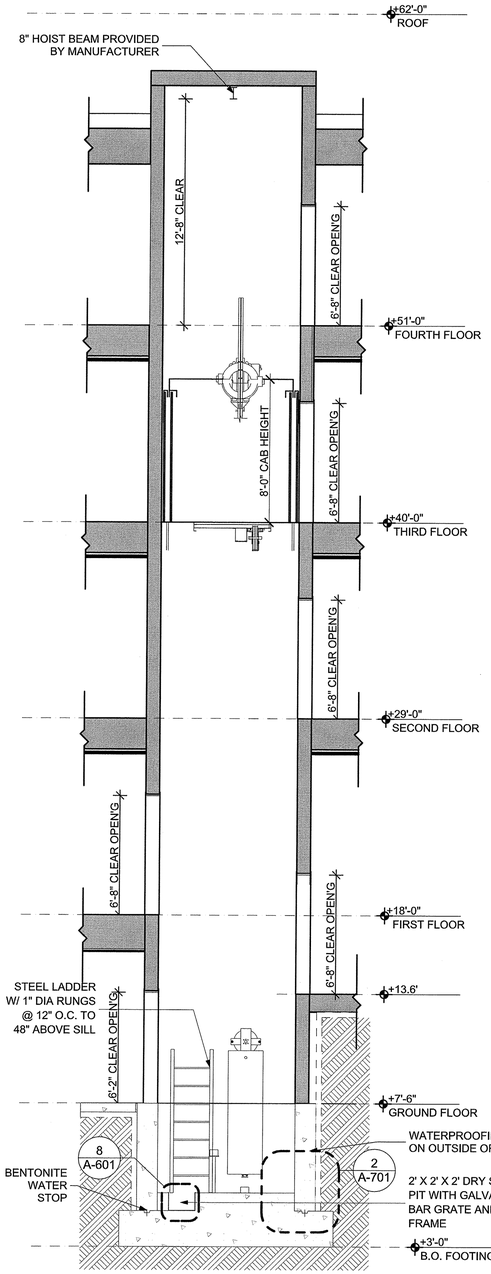

7 ELEVATOR #2 SECTION
SCALE: 1/4" = 1'-0"

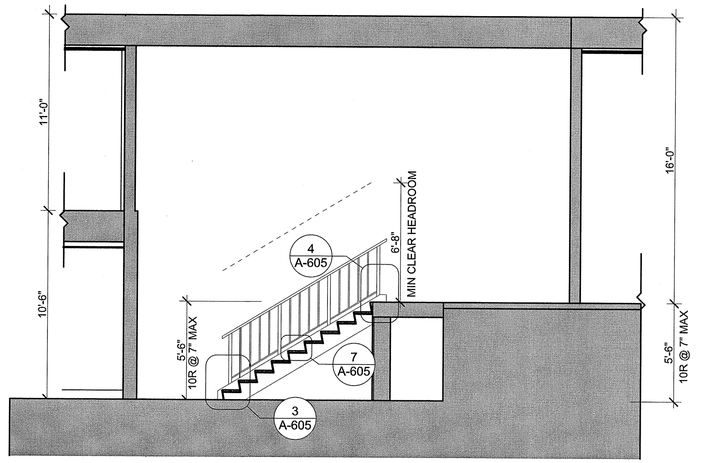

6 STAIR #4 SECTION
SCALE: 1/4" = 1'-0"

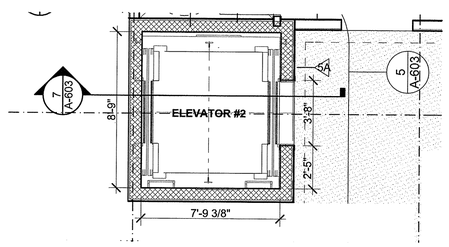

5 FOURTH FLOOR
SCALE: 1/4" = 1'-0"

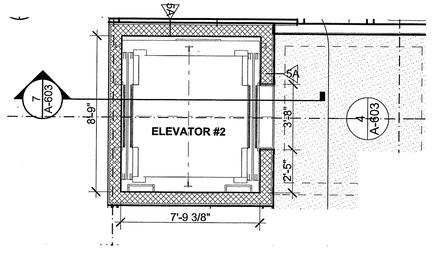

4 THIRD FLOOR
SCALE: 1/4" = 1'-0"

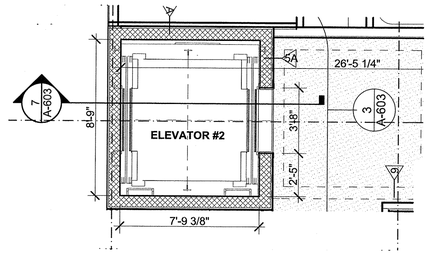

3 SECOND FLOOR
SCALE: 1/4" = 1'-0"

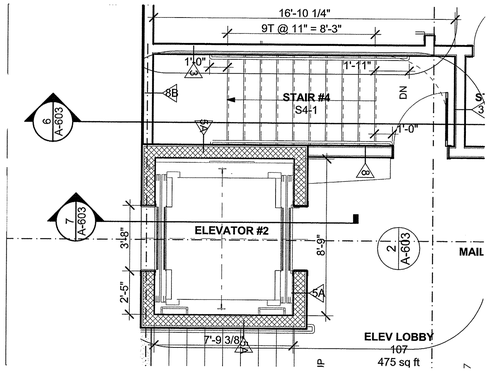

2 FIRST FLOOR
SCALE: 1/4" = 1'-0"

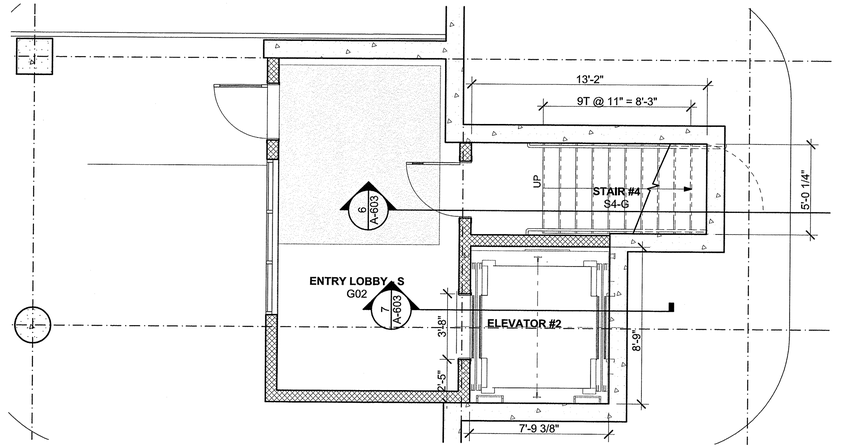

1 GROUND LEVEL
SCALE: 1/4" = 1'-0"

Washington Village Phase 1

20 Day Street Building B

Norwalk, CT

Trinity Washington Village Limited Partnership
&
the Norwalk Housing Authority

ICON ARCHITECTURE
101 SUMMER ST BOSTON MA 02110
617-451-3333 www.iconarch.com

CONSULTANT

STAMP

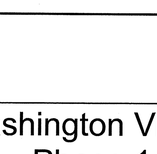

MARK	DATE	DESCRIPTION
	09-15-2014	PERMIT/ PRICING
	06-13-2014	PRICING
	11-18-2013	40% CHFA
	09-19-2013	CAM/ SPECIAL PERMIT

PROJECT NO.: 21222
DRAWN BY: RA, SO
CHECKED BY:

SHEET TITLE

BLDG B STAIR #4 & ELEVATOR #2 PLANS AND SECTIONS

A-603

9/18/2014 3:25 PM

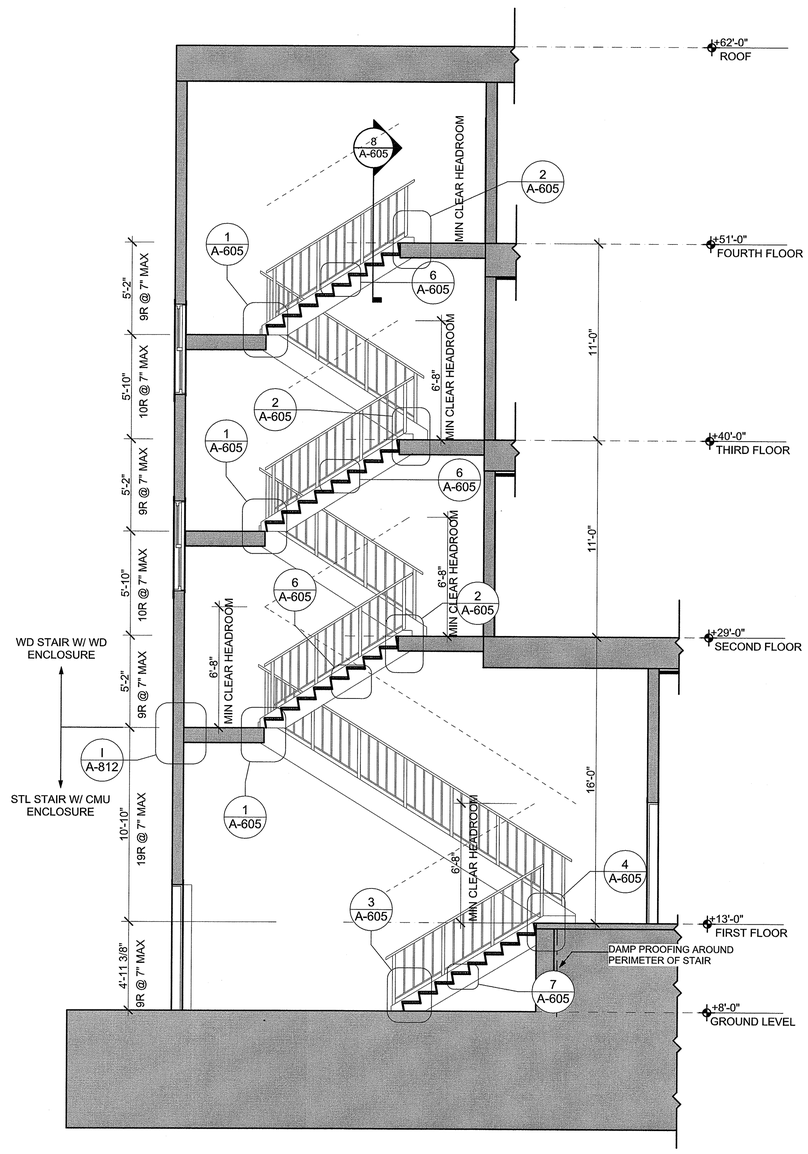

6 STAIR #3 SECTION
SCALE: 1/4" = 1'-0"

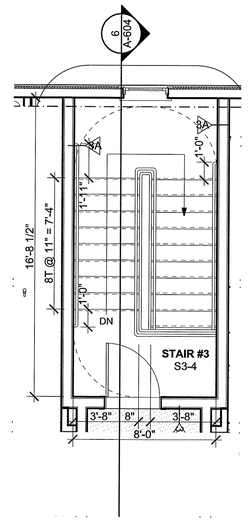

5 FOURTH FLOOR
SCALE: 1/4" = 1'-0"

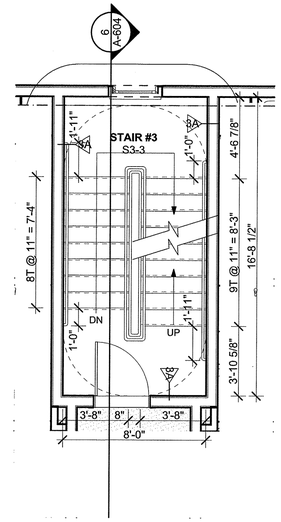

4 THIRD FLOOR
SCALE: 1/4" = 1'-0"

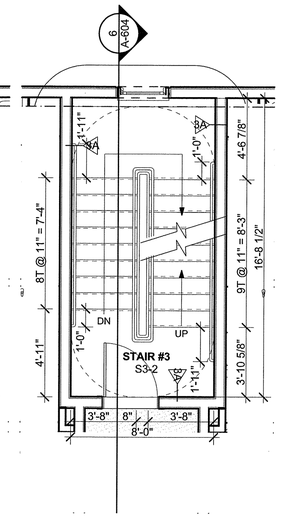

3 SECOND FLOOR
SCALE: 1/4" = 1'-0"

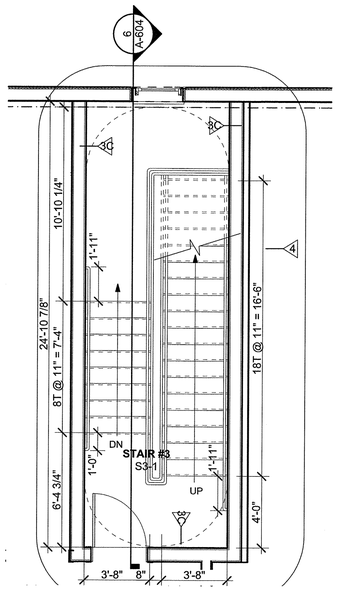

2 FIRST FLOOR
SCALE: 1/4" = 1'-0"

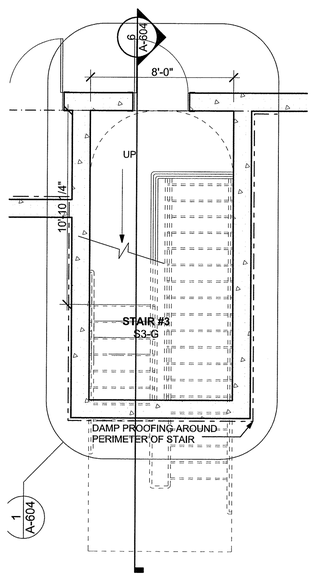

1 GROUND LEVEL
SCALE: 1/4" = 1'-0"

Washington Village Phase 1

20 Day Street Building B

Norwalk, CT

Trinity Washington Village Limited Partnership
&
the Norwalk Housing Authority

E-ICON ARCHITECTURE
101 SUMMER ST BOSTON MA 02110
617-451-3333 www.iconarch.com

CONSULTANT

STAMP

MARK	DATE	DESCRIPTION
	09-15-2014	PERMIT/ PRICING
	06-13-2014	PRICING
	11-18-2013	40% CHFA
	09-19-2013	CAM/ SPECIAL PERMIT

PROJECT NO.: 21222
DRAWN BY: RA, SO
CHECKED BY:

SHEET TITLE

BLDG B STAIR #3
PLANS AND SECTION

A-604

9/18/2014 3:29 PM

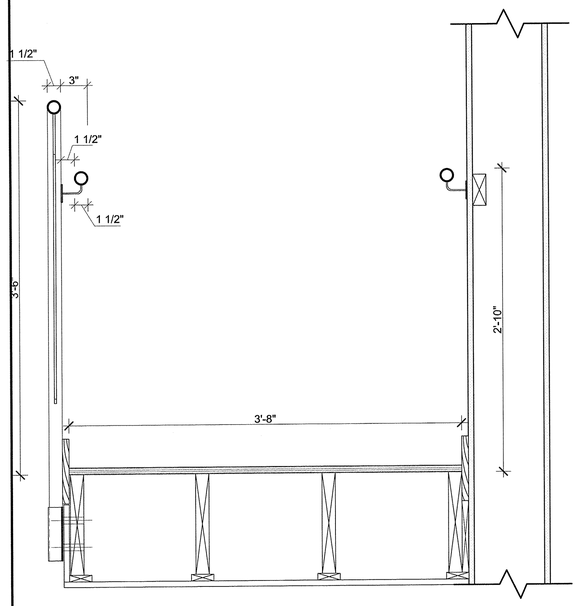

9 CROSS SECTION @ STAIR

SCALE: 1 1/2"= 1'-0"

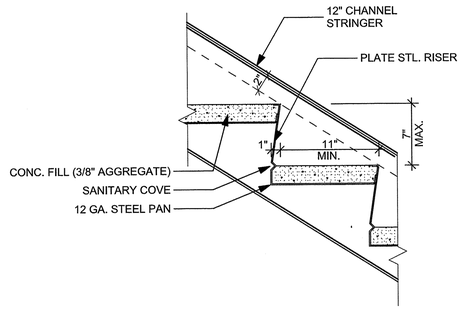

7 DETAIL @ METAL STAIR RISER

SCALE: 1 1/2"= 1'-0"

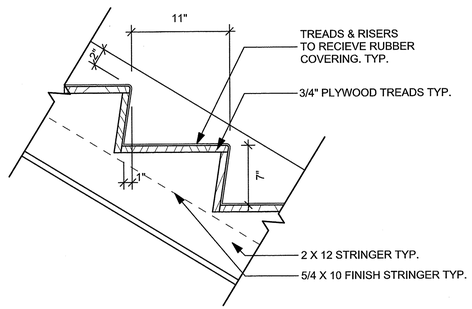

6 DETAIL @ WOOD STAIR RISER

SCALE: 1 1/2"= 1'-0"

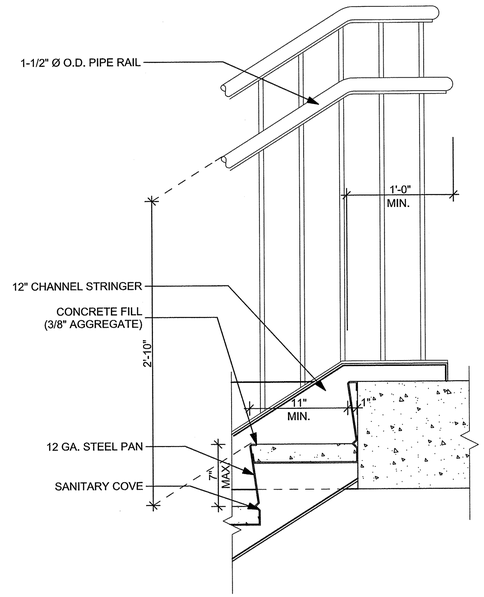

4 DETAIL @ METAL STAIR TOP TREAD

SCALE: 1 1/2"= 1'-0"

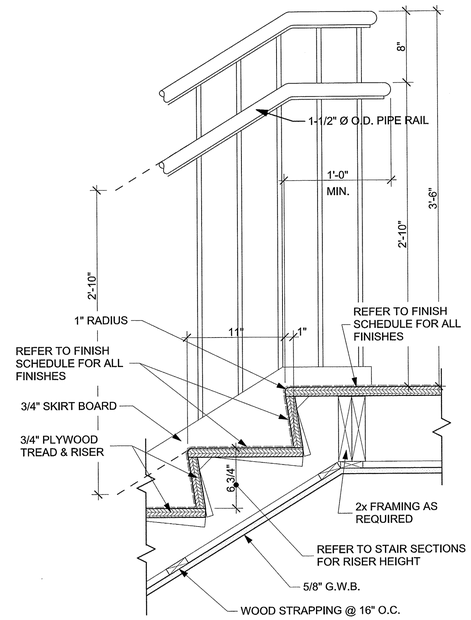

2 DETAIL @ WOOD STAIR TOP TREAD

SCALE: 1 1/2"= 1'-0"

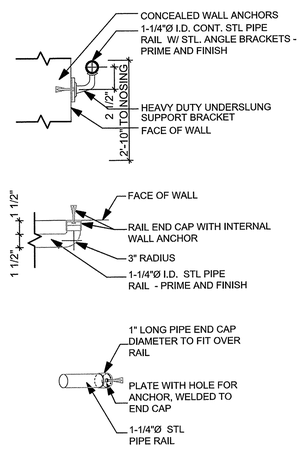

8 STAIR RAIL DETAIL

SCALE: 1 1/2"= 1'-0"

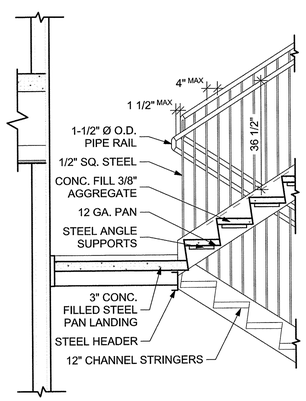

5 DETAIL @ METAL LANDING

SCALE: 1/2" = 1'-0"

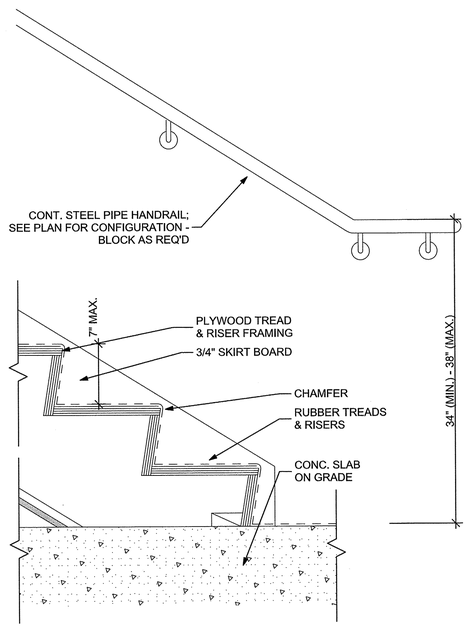

3 DETAIL @ WOOD STAIR LANDING

SCALE: 1 1/2"= 1'-0"

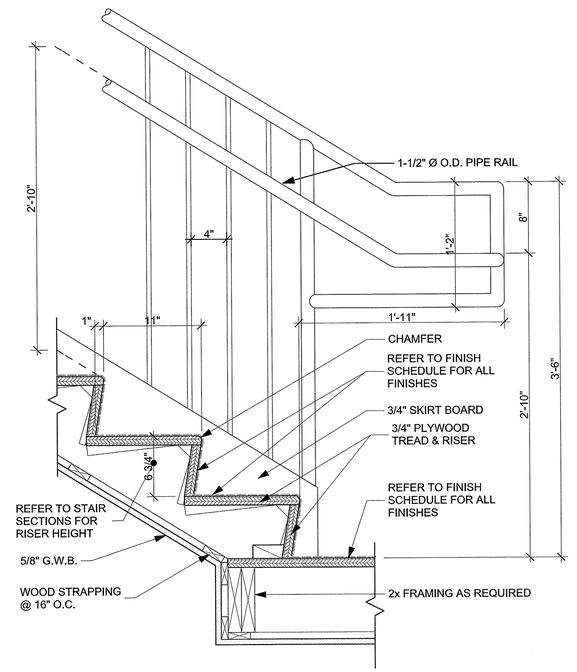

1 DETAIL @ WOOD STAIR LANDING

SCALE: 1 1/2"= 1'-0"

Washington Village Phase 1

20 Day Street Building B

Norwalk, CT

Trinity Washington Village Limited Partnership
&
the Norwalk Housing Authority

E-ICON ARCHITECTURE
101 SUMMER ST BOSTON MA 02110
617-451-3333 www.iconarch.com

CONSULTANT

STAMP

STATE OF CONNECTICUT STEVEN A. HERR NO. 8664 LICENSED PROFESSIONAL ENGINEER

MARK	DATE	DESCRIPTION
	09-15-2014	PERMIT/ PRICING
	06-13-2014	PRICING
	11-18-2013	40% CHFA
	09-19-2013	CAM/ SPECIAL PERMIT

PROJECT NO.: 21222
DRAWN BY: RA
CHECKED BY:

SHEET TITLE

COMMON STAIR DETAILS

A-605

9/15/2014 3:29 PM

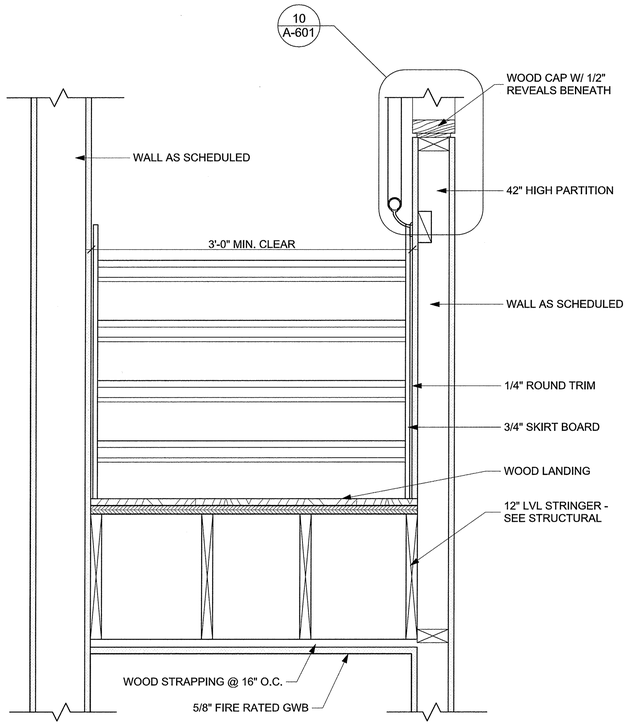

7 CROSS SECTION

SCALE: 1 1/2"= 1'-0"

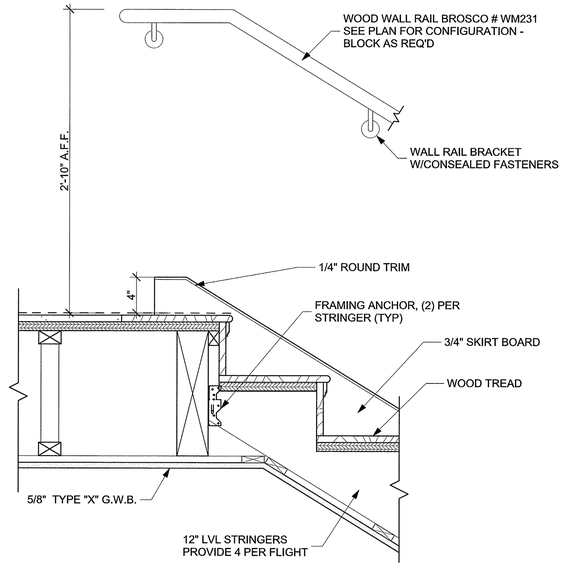

6 DETAIL @ TOP LANDING

SCALE: 1 1/2"= 1'-0"

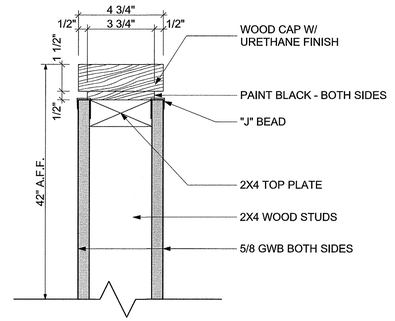

5 DETAIL @ HALF WALL CAP

SCALE: 3" = 1'-0"

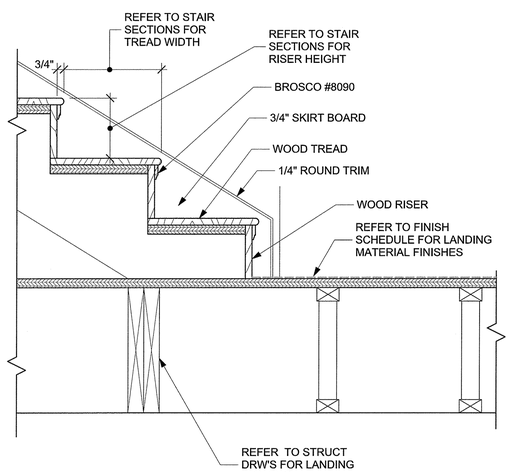

4 DETAIL @ LANDING

SCALE: 1 1/2"= 1'-0"

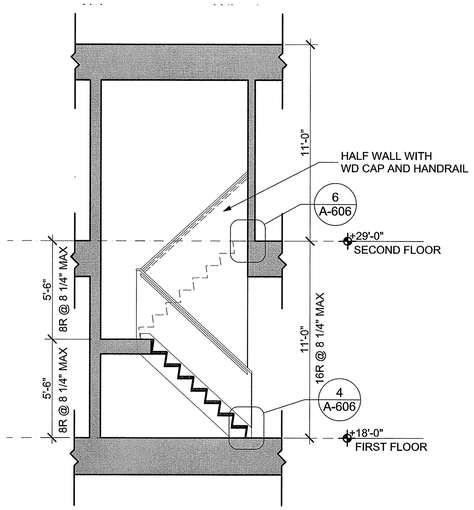

3 BLDG B INT UNIT STAIR

SCALE: 1/4" = 1'-0"

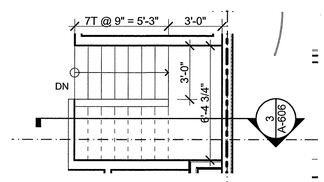

2 SECOND FLOOR

SCALE: 1/4" = 1'-0"

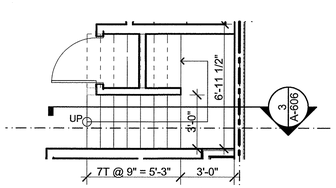

1 FIRST FLOOR

SCALE: 1/4" = 1'-0"

Washington Village Phase 1

20 Day Street Building B

Norwalk, CT

Trinity Washington Village Limited Partnership
&
the Norwalk Housing Authority

E-ICON ARCHITECTURE
101 SUMMER ST BOSTON MA 02110
617-451-3333 www.iconarch.com

CONSULTANT

STAMP



MARK	DATE	DESCRIPTION
	09-15-2014	PERMIT/ PRICING
	06-13-2014	PRICING
	11-18-2013	40% CHFA
	09-19-2013	CAM/ SPECIAL PERMIT

PROJECT NO.: 21222
DRAWN BY: RA
CHECKED BY:

SHEET TITLE

TOWNHOUSE INT. UNIT STAIRS PLANS, SECTIONS & DETAILS

A-606

6/16/2014 1:26 PM

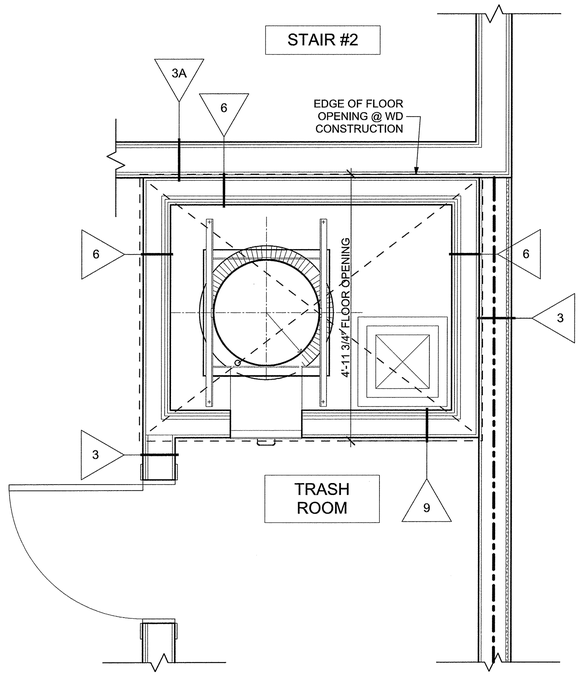

4 TRASH CHUTE DETAIL
SCALE: 3/4" = 1'-0"

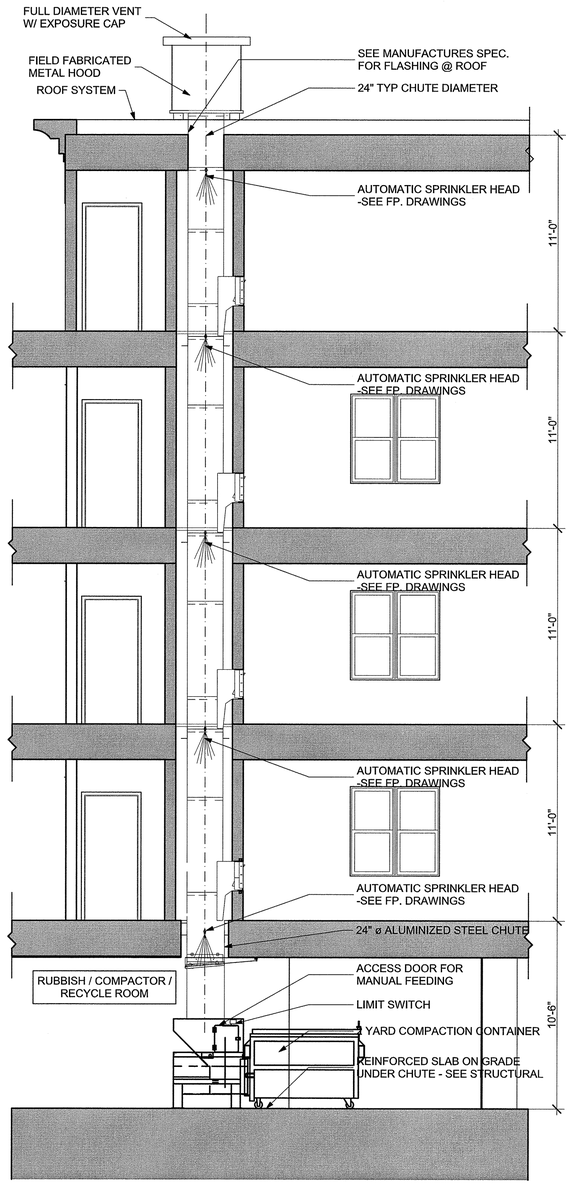

3 SECTION @ TRASH CHUTE
SCALE: 1/4" = 1'-0"

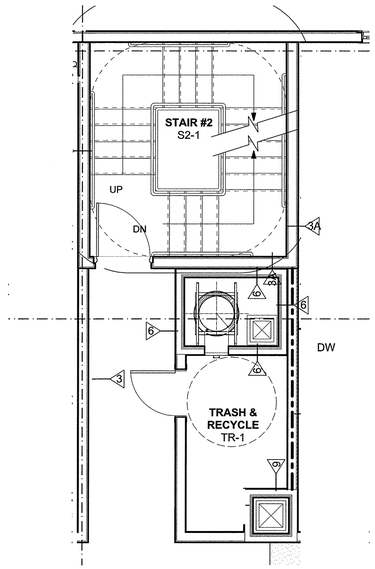

2 TRASH CHUTE @ TYPICAL FLOOR
SCALE: 1/4" = 1'-0"

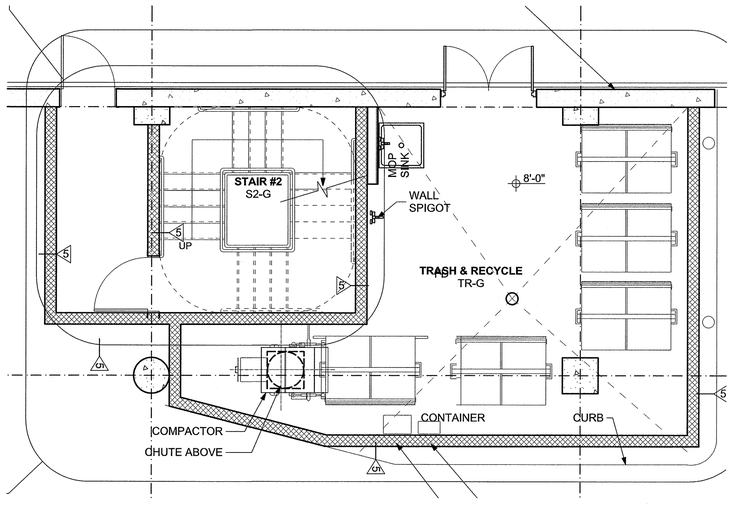

1 TRASH CHUTE @ GROUND FLOOR
SCALE: 1/4" = 1'-0"

Washington Village Phase 1

20 Day Street Building B

Norwalk, CT

Trinity Washington Village Limited Partnership
&
the Norwalk Housing Authority

E-ICON ARCHITECTURE
101 SUMMER ST BOSTON MA 02110
617-451-3333 www.iconarch.com

CONSULTANT

STAMP

STATE OF CONNECTICUT
STEVEN A. HEIM
NO. 25914
REGISTERED ARCHITECT

MARK	DATE	DESCRIPTION
	09-15-2014	PERMIT/ PRICING
	06-13-2014	PRICING
	11-18-2013	40% CHFA
	09-19-2013	CAM/ SPECIAL PERMIT

PROJECT NO.: 21222
DRAWN BY: RA, KH
CHECKED BY:

SHEET TITLE

TRASH CHUTE PLANS & SECTION

A-607

9/15/2014 1:29:29 PM

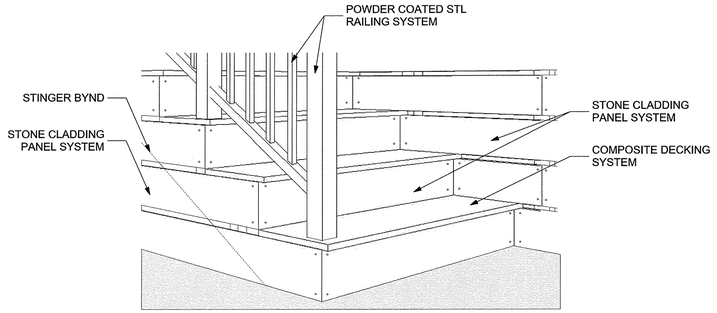

5 DETAIL @ EXTERIOR STAIR

SCALE: 1" = 1'-0"

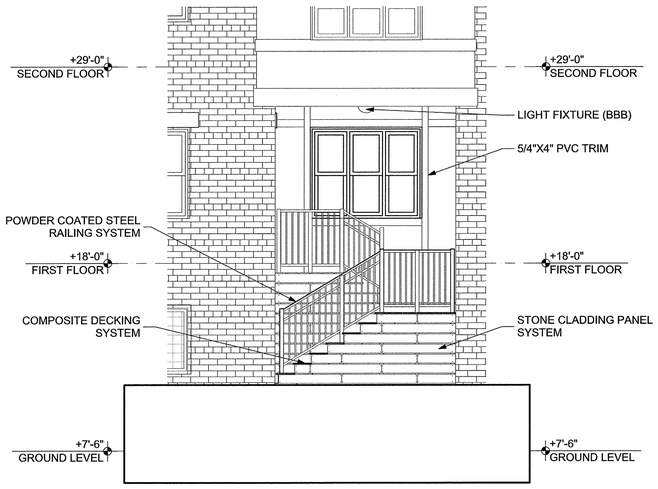

3 EXTERIOR ENTRY STAIR ELEVATION

SCALE: 1/4" = 1'-0"

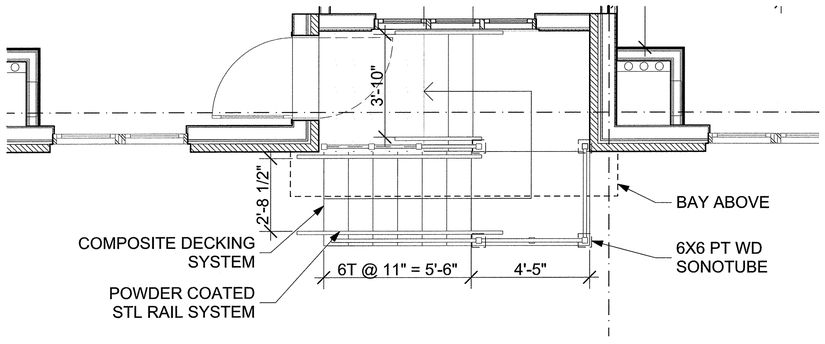

2 EXTERIOR ENTRY STAIR

SCALE: 3/8" = 1'-0"



4 EXTERIOR STOOP STAIR ELEVATION

SCALE: 3/8" = 1'-0"

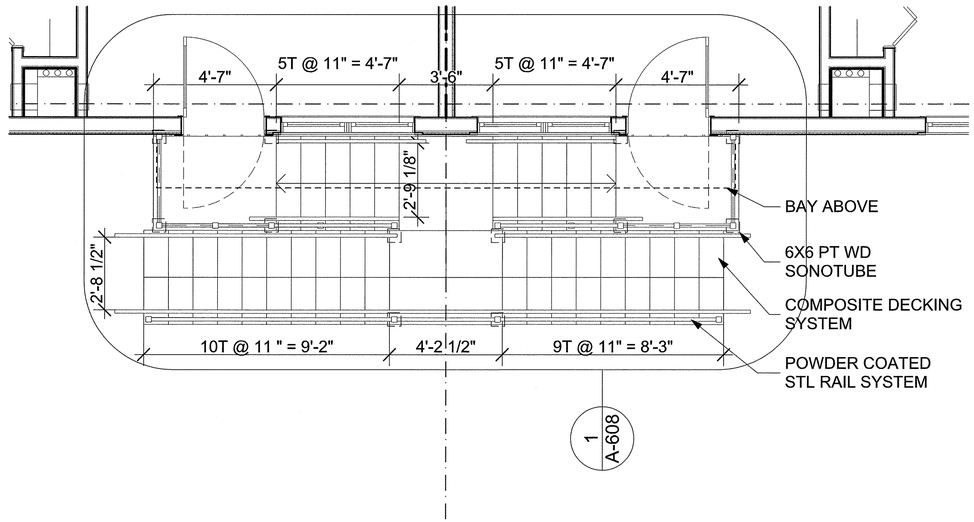

1 EXTERIOR STOOP STAIR

SCALE: 3/8" = 1'-0"

Washington Village Phase 1

20 Day Street Building B

Norwalk, CT

Trinity Washington Village Limited Partnership
&
the Norwalk Housing Authority

E-ICON ARCHITECTURE
101 SUMMER ST BOSTON MA 02110
617-451-3333 www.iconarch.com

CONSULTANT

STAMP



MARK	DATE	DESCRIPTION
	09-15-2014	PERMIT/ PRICING
	06-13-2014	PRICING
	11-18-2013	40% CHFA
	09-19-2013	CAM/ SPECIAL PERMIT

PROJECT NO.: 21222
DRAWN BY:
CHECKED BY:

SHEET TITLE

EXTERIOR STAIRS

A-608

9/18/2014 3:30 PM

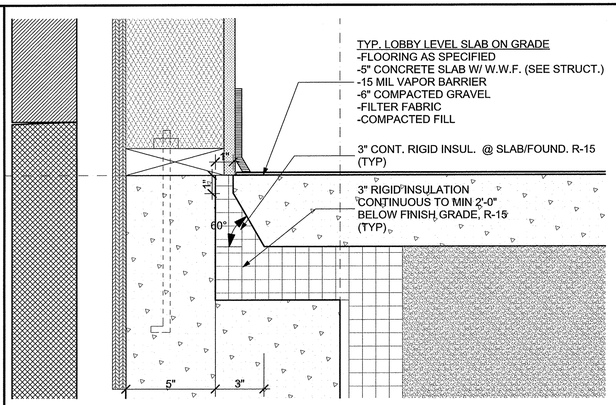

7 THERMAL BREAK AT SLAB EDGE DETAIL

SCALE: 3" = 1'-0"

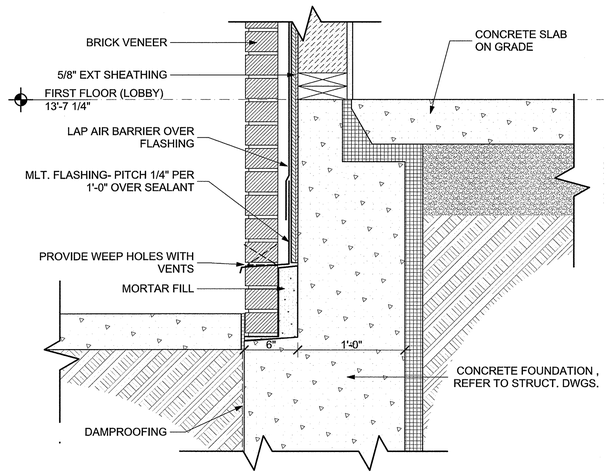

4 BRICK SHELF @ LOBBY LEVEL

SCALE: 1 1/2"= 1'-0"

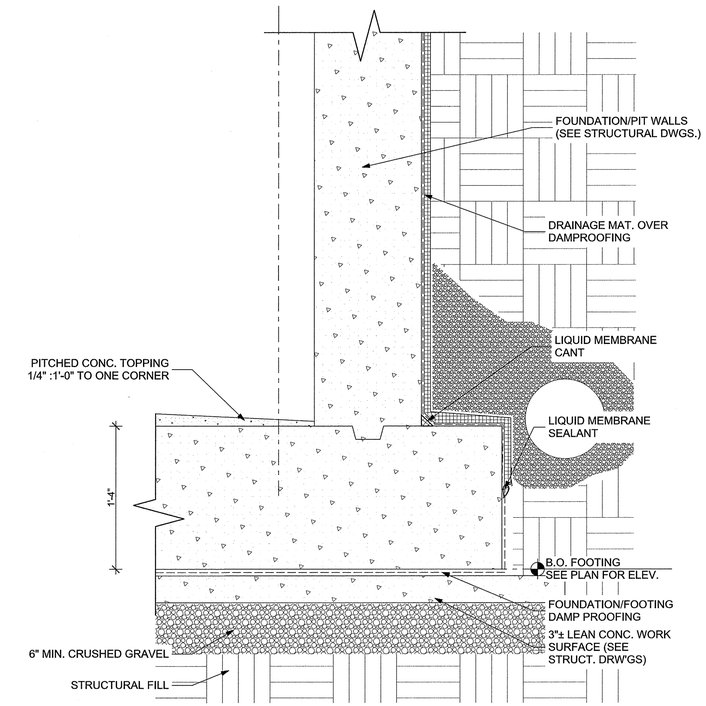

2 FOOTING DETAIL @ ELEVATOR PIT

SCALE: 1 1/2"= 1'-0"

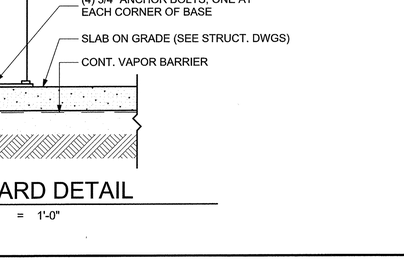

6 BRICK SHELF

SCALE: 1 1/2"= 1'-0"

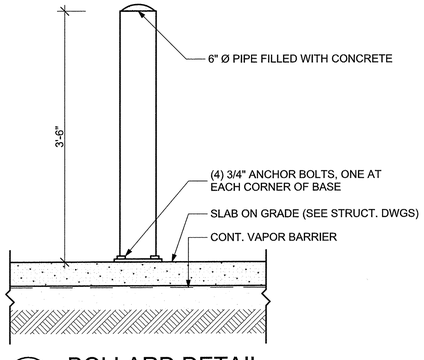

5 BOLLARD DETAIL

SCALE: 1" = 1'-0"

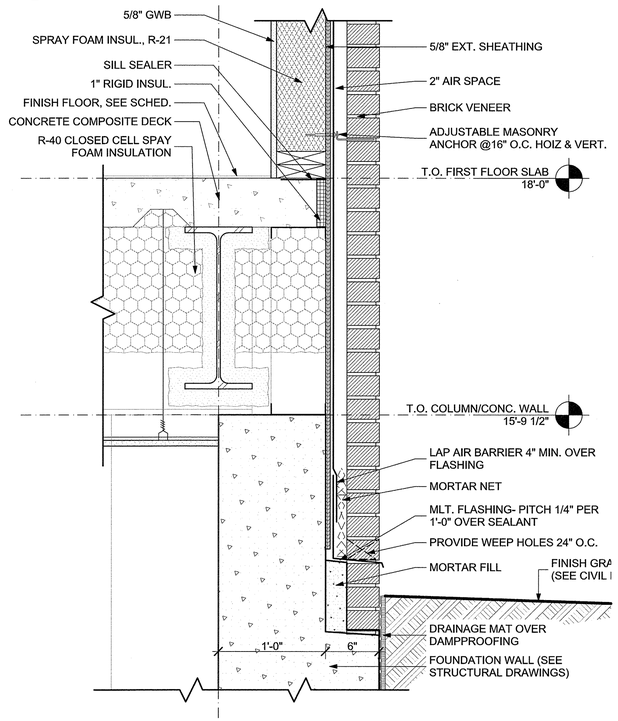

3 BRICK SHELF

SCALE: 1 1/2"= 1'-0"

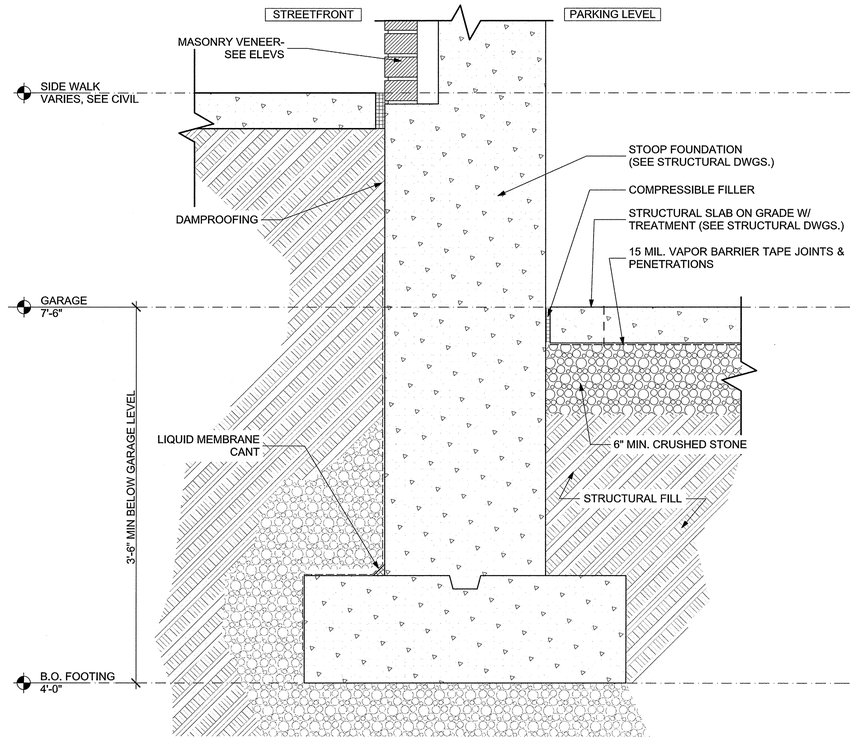

1 TYP. FOOTING DETAIL

SCALE: 1 1/2"= 1'-0"

Washington Village Phase 1

20 Day Street Building B

Norwalk, CT

Trinity Washington Village Limited Partnership
&
the Norwalk Housing Authority

E-ICON ARCHITECTURE
101 SUMMER ST BOSTON MA 02110
617-451-3333 www.iconarch.com

CONSULTANT

STAMP



MARK	DATE	DESCRIPTION
	09-15-2014	PERMIT/ PRICING
	06-13-2014	PRICING
	11-18-2013	40% CHFA
	09-19-2013	CAM/ SPECIAL PERMIT

PROJECT NO.: 21222
DRAWN BY: AF, BD, SO, SW
CHECKED BY:

SHEET TITLE

SECTION DETAILS (LOWER)

A-701

9/19/2014 3:01 PM

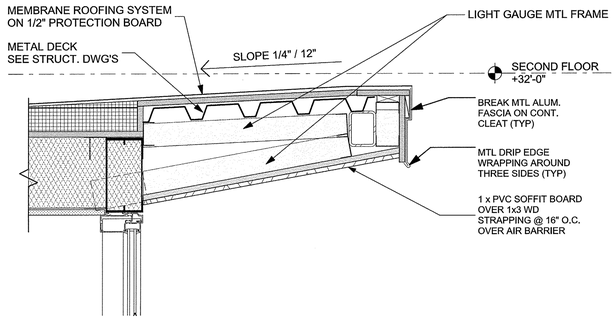

7 ENTRY CANOPY DETAIL
SCALE: 1 1/2"= 1'-0"

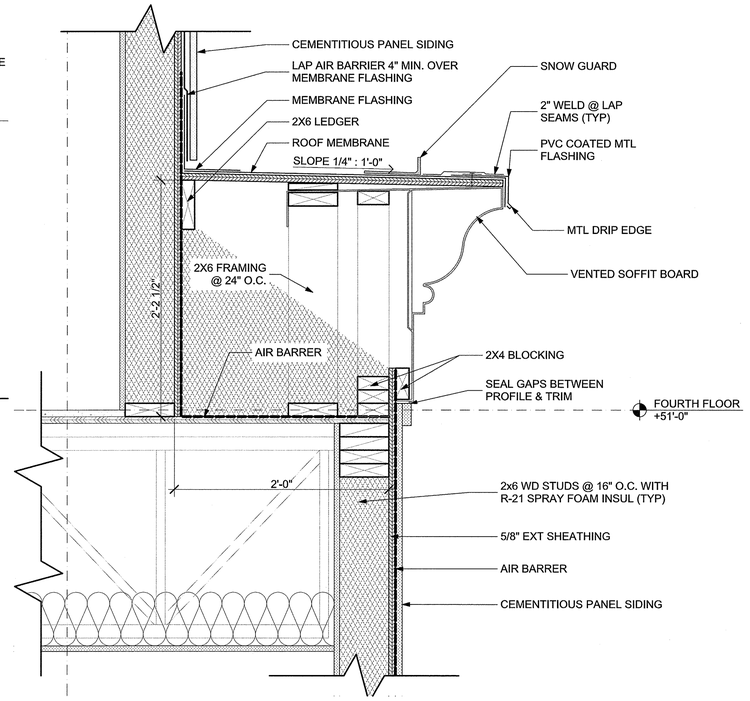

4 BAY ROOF DETAIL
SCALE: 1 1/2"= 1'-0"

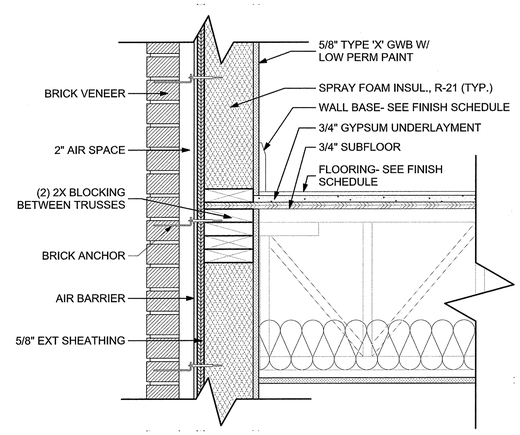

6 FLOOR @ EXTERIOR WALL (BRICK)
SCALE: 1 1/2"= 1'-0"

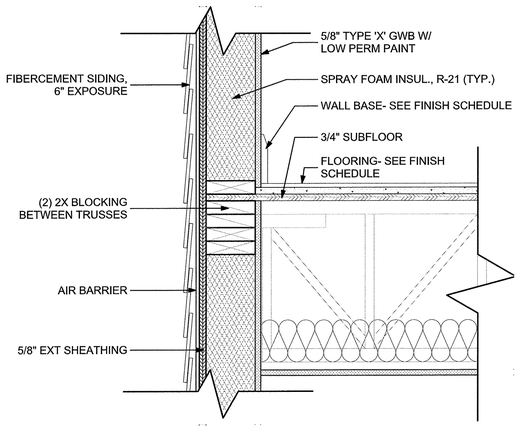

5 FLOOR @ EXTERIOR WALL
SCALE: 1 1/2"= 1'-0"

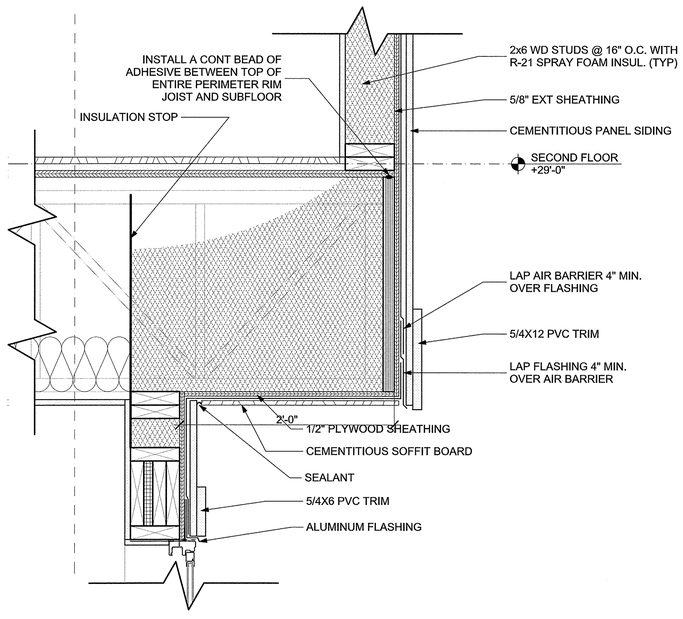

3 BAY DETAIL
SCALE: 1 1/2"= 1'-0"

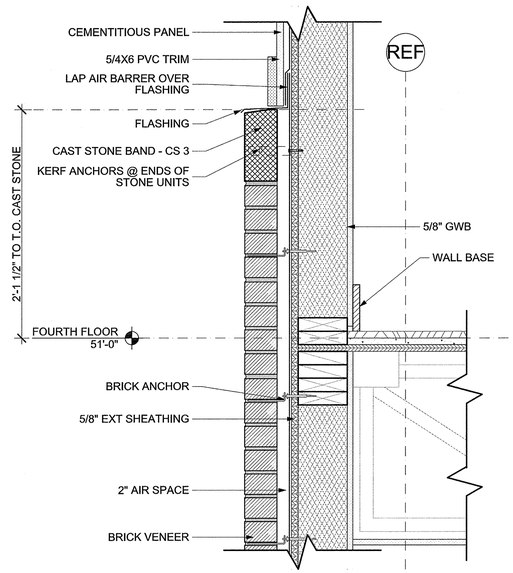

2 DETAIL @ BRICK TO SIDING TRANSITION
SCALE: 1 1/2"= 1'-0"

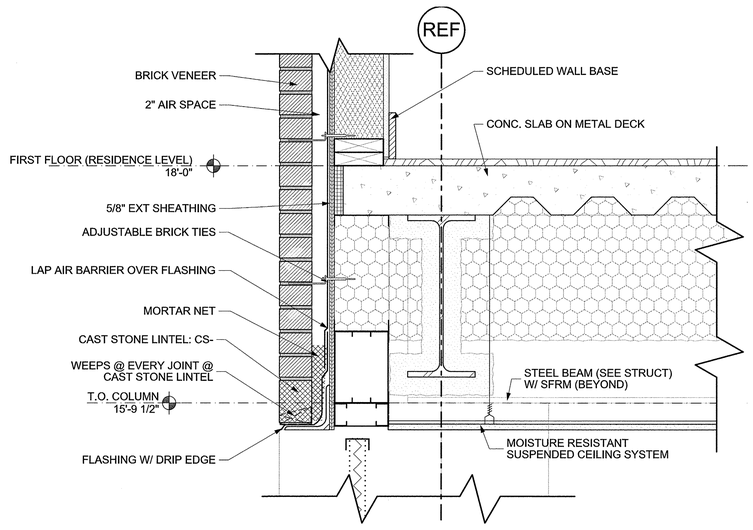

1 BRICK SHELF @ CONC. FOUND. WALL
SCALE: 1 1/2"= 1'-0"

Washington Village Phase 1

20 Day Street Building B

Norwalk, CT

Trinity Washington Village Limited Partnership
&
the Norwalk Housing Authority

E-ICON ARCHITECTURE
101 SUMMER ST BOSTON MA 02110
617-451-3333 www.iconarch.com

CONSULTANT

STAMP



MARK	DATE	DESCRIPTION
	09-15-2014	PERMIT/ PRICING
	06-13-2014	PRICING
	11-18-2013	40% CHFA
	09-19-2013	CAM/ SPECIAL PERMIT

PROJECT NO.: 21222
DRAWN BY: AF, BD, SO, SW
CHECKED BY:

SHEET TITLE

SECTION DETAILS
(MID)

A-702

9/18/2014 3:30 PM

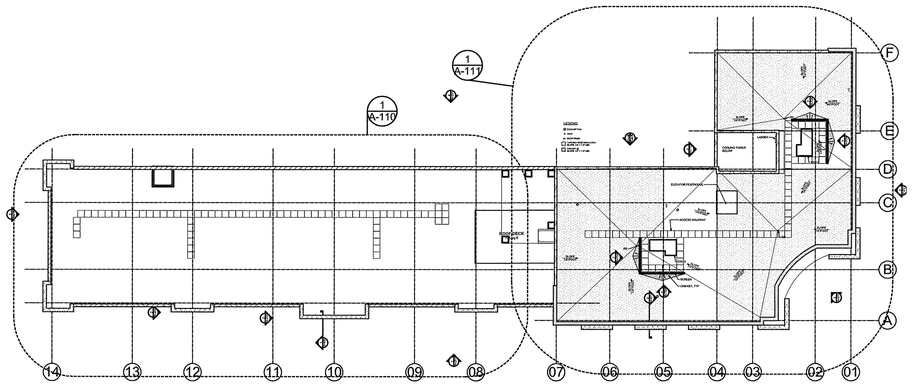

6 CORNICE KEY PLAN
SCALE: 1/32" = 1'-0"

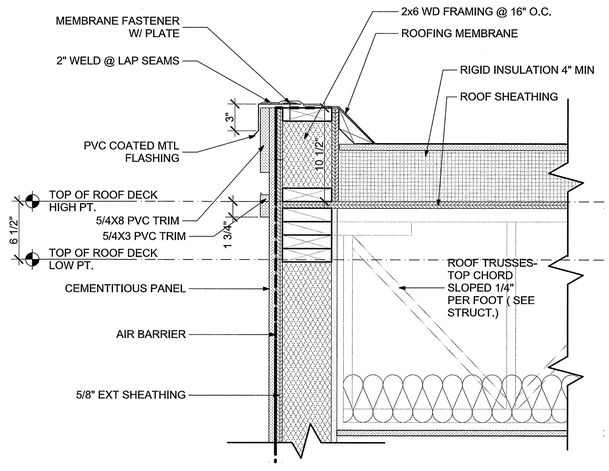

4 CORNICE TYPE D1
SCALE: 1 1/2"= 1'-0"

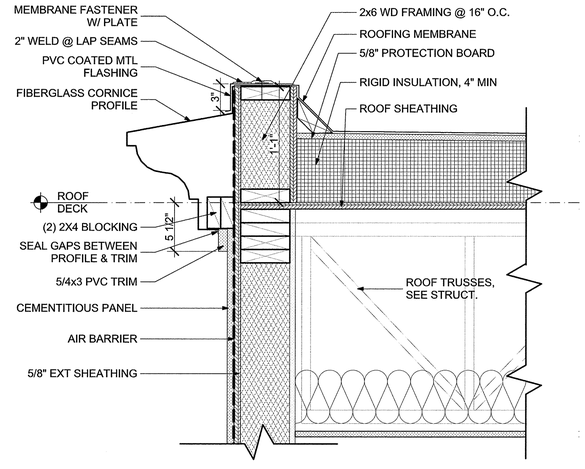

2 CORNICE TYPE B
SCALE: 1 1/2"= 1'-0"

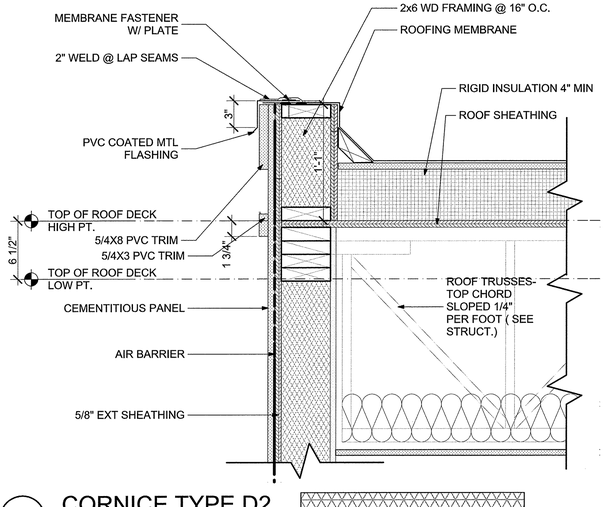

5 CORNICE TYPE D2
SCALE: 1 1/2"= 1'-0"

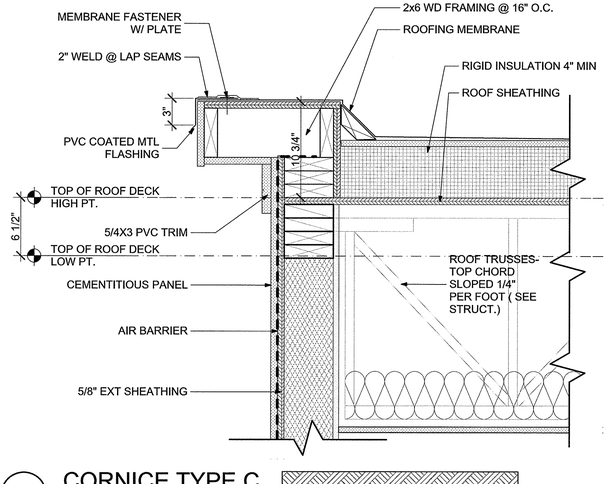

3 CORNICE TYPE C
SCALE: 1 1/2"= 1'-0"

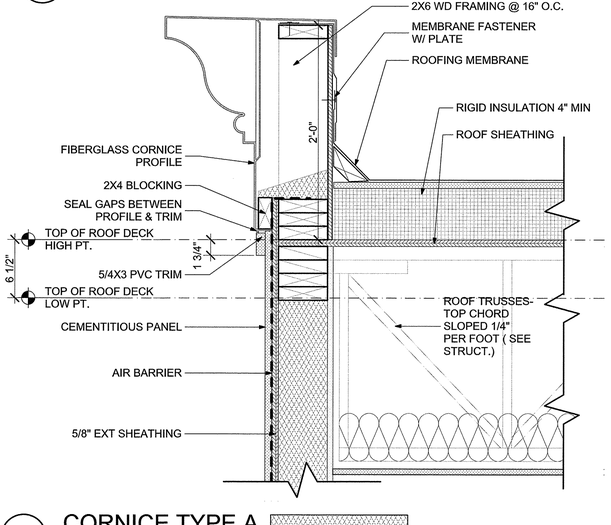

1 CORNICE TYPE A
SCALE: 1 1/2"= 1'-0"

Washington Village Phase 1

20 Day Street Building B

Norwalk, CT

Trinity Washington Village Limited Partnership
&
the Norwalk Housing Authority

E-ICON ARCHITECTURE
101 SUMMER ST BOSTON MA 02110
617-451-3333 www.iconarch.com

CONSULTANT

STAMP



MARK	DATE	DESCRIPTION
	09-15-2014	PERMIT/ PRICING
	06-13-2014	PRICING
	11-18-2013	40% CHFA
	09-19-2013	CAM/ SPECIAL PERMIT

PROJECT NO.: 21222
DRAWN BY: AF/ KH BD, SO, SW
CHECKED BY:

SHEET TITLE

SECTION DETAILS (UPPER)

A-703

9/18/2014 3:30 PM

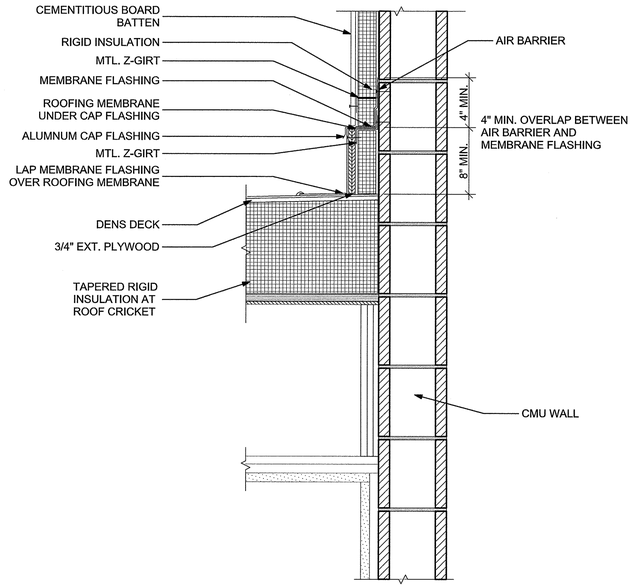

5 ELEVATOR SHAFT DETAIL

SCALE: 1 1/2"= 1'-0"

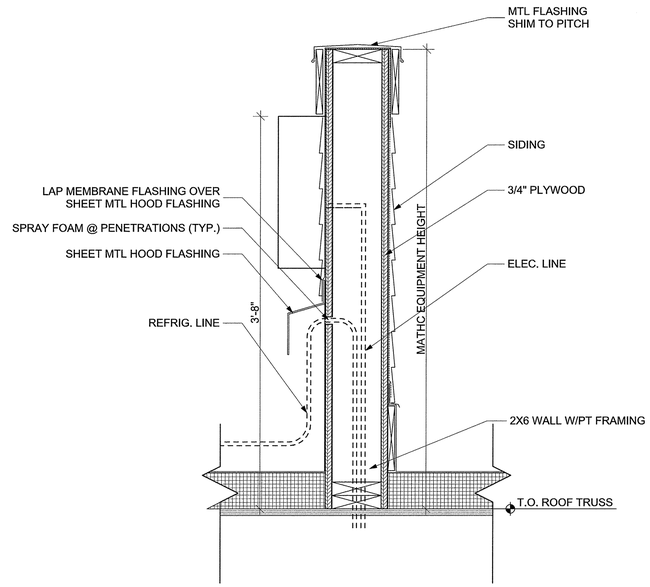

7 SECTION @ ELECTRICAL / SCREEN ROOF WALL

SCALE: 1 1/2"= 1'-0"

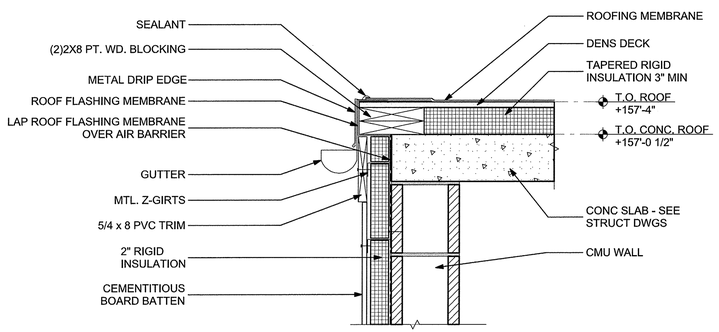

6 ELEVATOR SHAFT DETAIL @ ROOF

SCALE: 1 1/2"= 1'-0"

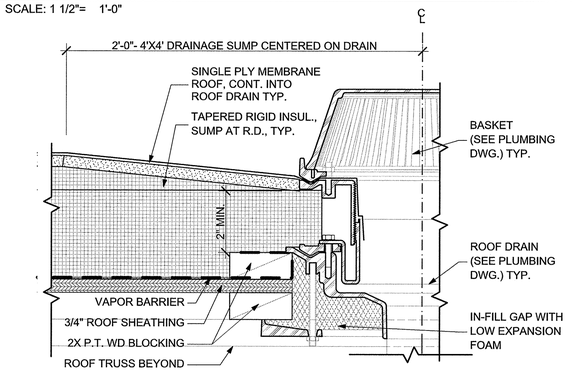

4 ROOF DRAIN DETAIL

SCALE: 3" = 1'-0"

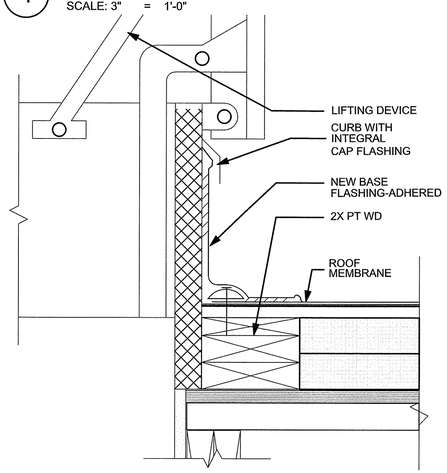

3 ROOF ACCESS HATCH DETAIL

SCALE: 3" = 1'-0"

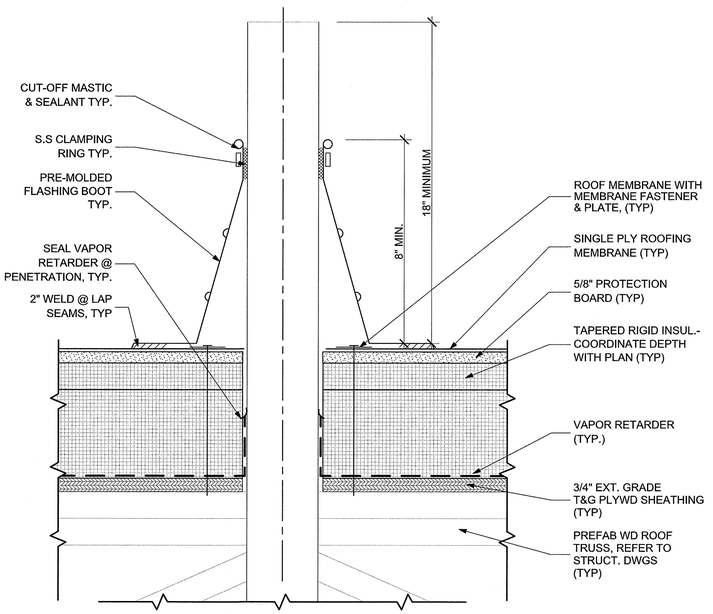

2 ROOF VENT PENETRATION

SCALE: 3" = 1'-0"

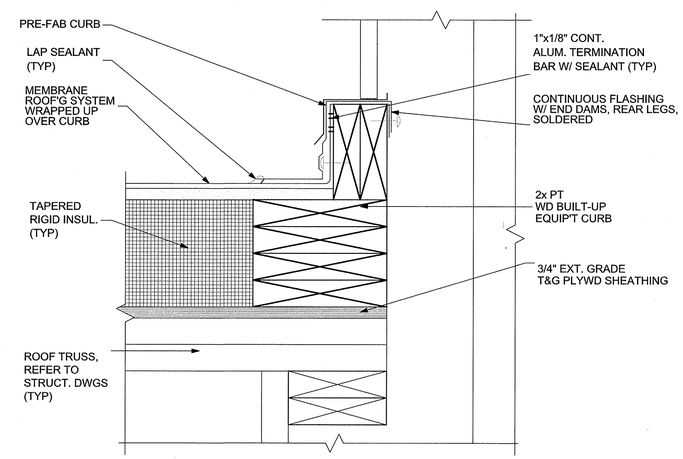

1 TYPICAL EQUIPMENT CURB DETAIL

SCALE: 3" = 1'-0"

Washington Village Phase 1

20 Day Street Building B

Norwalk, CT

Trinity Washington Village Limited Partnership
&
the Norwalk Housing Authority

E-ICON ARCHITECTURE
101 SUMMER ST BOSTON MA 02110
617-451-3333 www.iconarch.com

CONSULTANT

STAMP

STATE OF CONNECTICUT · STEVEN A. HARRIS · NO. 9864 · REGISTERED ARCHITECT

MARK	DATE	DESCRIPTION
	09-15-2014	PERMIT/ PRICING
	06-13-2014	PRICING
	11-18-2013	40% CHFA
	09-19-2013	CAM/ SPECIAL PERMIT

PROJECT NO.: 21222
DRAWN BY: AF
CHECKED BY:

SHEET TITLE

ROOF DETAILS

A-704

9/19/2013 3:30 PM

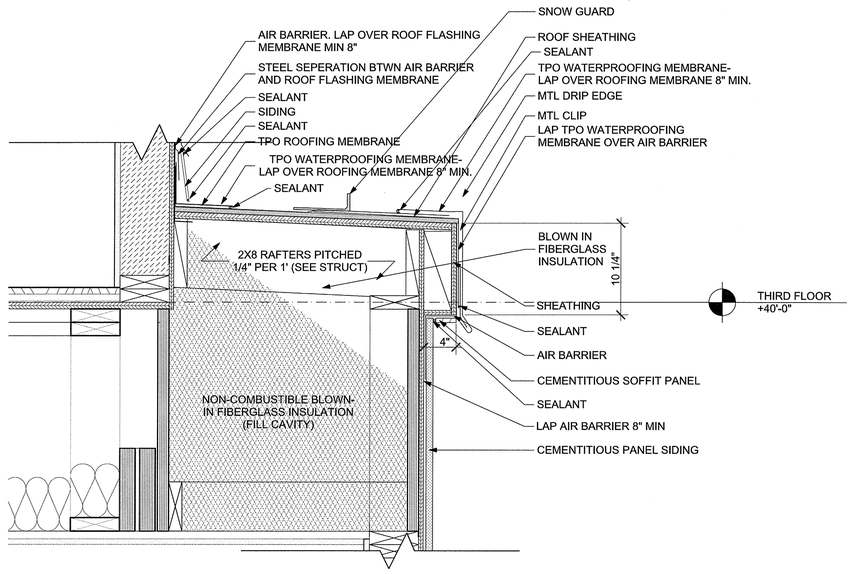

3 BAY SIDE ROOF DETAIL
SCALE: 1 1/2"= 1'-0"

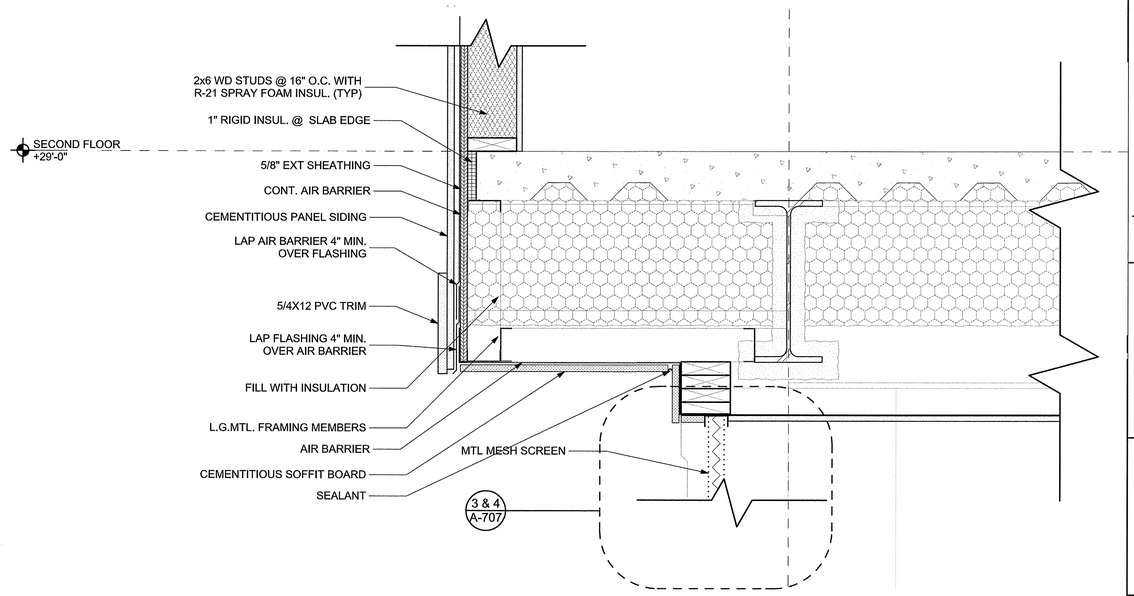

2 BAY DETAIL
SCALE: 1 1/2"= 1'-0"

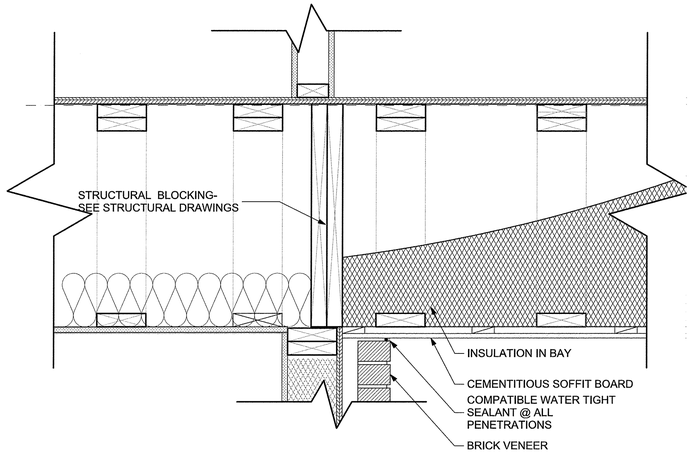

4 BRICK VENEER/ BAY TRANSITION DETAIL
SCALE: 1 1/2"= 1'-0"

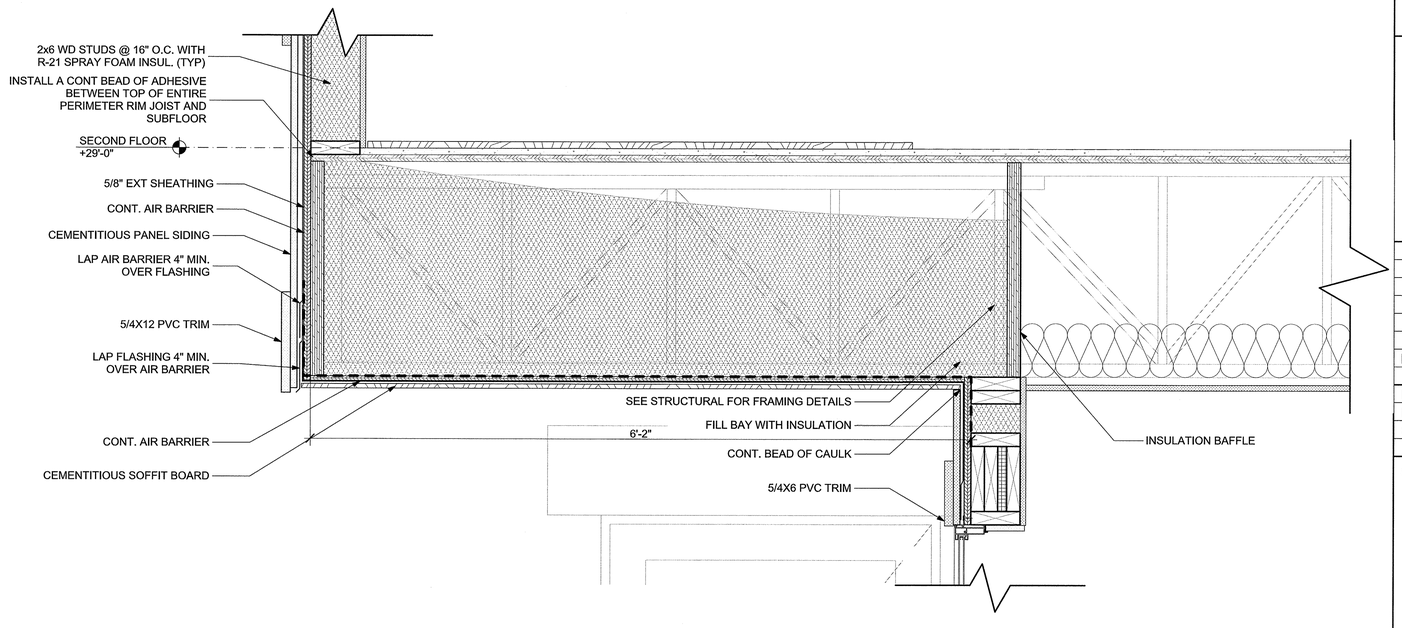

1 BAY/STOOP DETAIL
SCALE: 1 1/2"= 1'-0"

Washington Village Phase 1

20 Day Street Building B

Norwalk, CT

Trinity Washington Village Limited Partnership
&
the Norwalk Housing Authority

E-ICON ARCHITECTURE
101 SUMMER ST BOSTON MA 02110
617-451-3333 www.iconarch.com

CONSULTANT

STAMP



MARK	DATE	DESCRIPTION
	09-15-2014	PERMIT/ PRICING
	06-13-2014	PRICING
	11-18-2013	40% CHFA
	09-19-2013	CAM/ SPECIAL PERMIT

PROJECT NO.: 21222
DRAWN BY: AF
CHECKED BY:

SHEET TITLE

BAY DETAILS

A-705

9/18/2014 3:30 PM

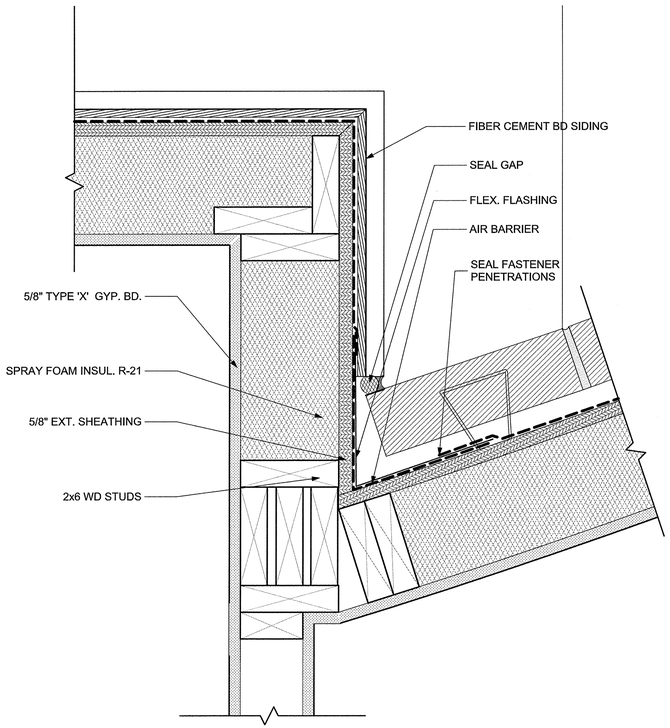

10 PLAN DETAIL @ BRICK TO PANEL TRANSITION
SCALE: 3" = 1'-0"

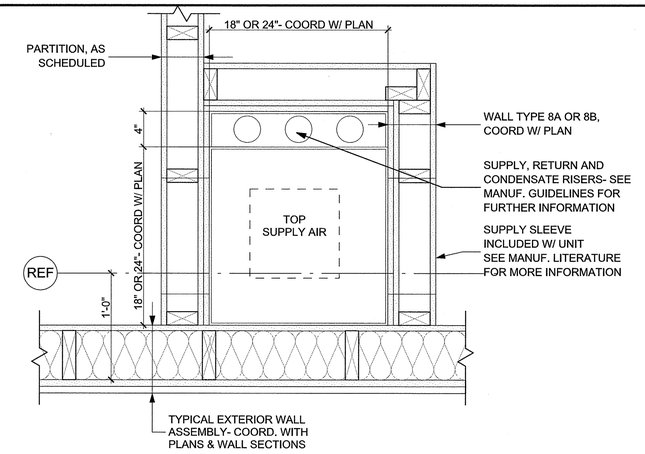

9 TYPICAL HEAT PUMP PLAN DETAIL
SCALE: 1 1/2"= 1'-0"

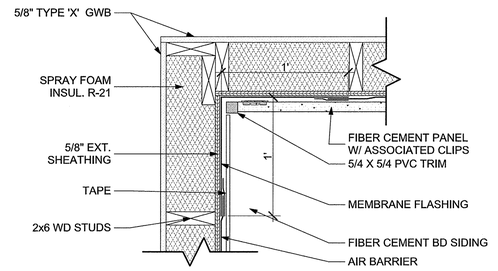

4 FIBER CEMENT TRANSITION @ INSIDE CORNER
SCALE: 1 1/2"= 1'-0"

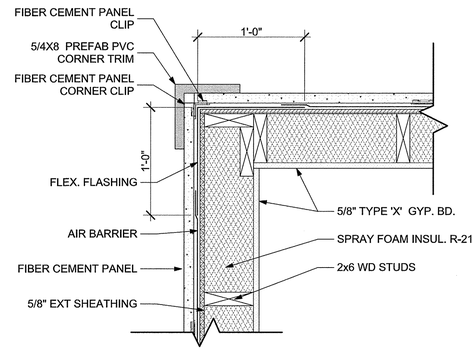

3 FIBER CEMENT PANEL @ OUTSIDE CORNER
SCALE: 1 1/2"= 1'-0"

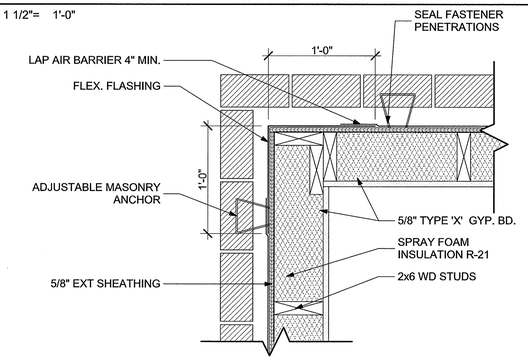

7 BRICK VENEER @ OUTSIDE CORNER
SCALE: 1 1/2"= 1'-0"

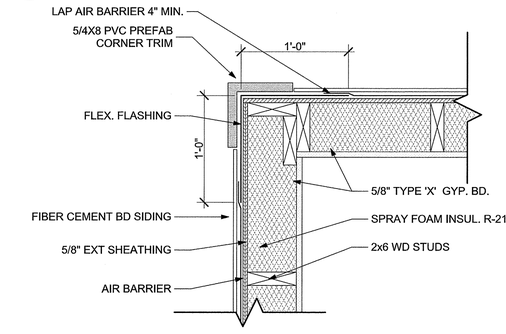

2 FIBER CEMENT SIDING @ OUTSIDE CORNER
SCALE: 1 1/2"= 1'-0"

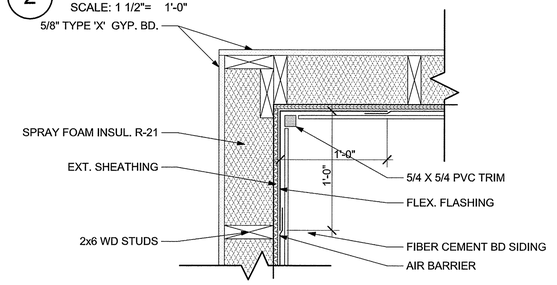

1 FIBER CEMENT SIDING INSIDE CORNER
SCALE: 1 1/2"= 1'-0"

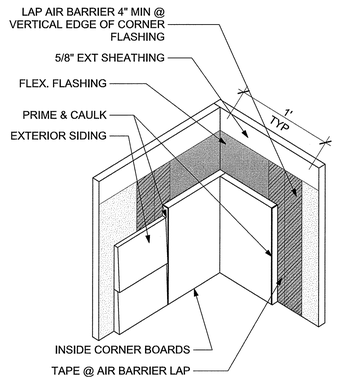

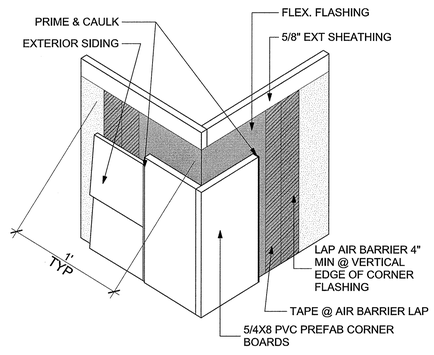

8 CORNER SIDING DETAIL
SCALE: 3" = 1'-0"

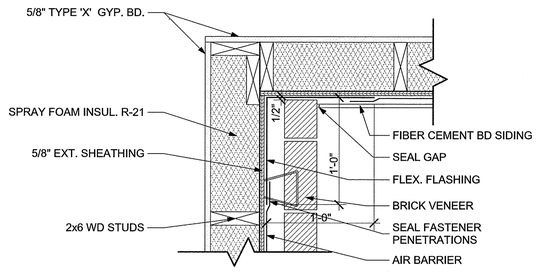

6 BRICK TO SIDING INSIDE CORNER
SCALE: 1 1/2"= 1'-0"

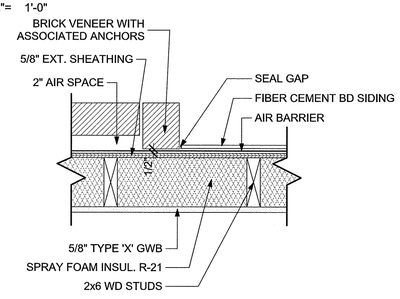

5 MATERIAL TRANSITION
SCALE: 1 1/2"= 1'-0"

Washington Village Phase 1

20 Day Street
Building B

Norwalk, CT

Trinity Washington Village Limited Partnership
&
the Norwalk Housing Authority

E-ICON ARCHITECTURE
101 SUMMER ST BOSTON MA 02110
617-451-3333 www.iconarch.com

CONSULTANT

STAMP

STATE OF CONNECTICUT · STEVEN A. HIGUM · NO. 5866 · REGISTERED ARCHITECT

MARK	DATE	DESCRIPTION
	09-15-2014	PERMIT/ PRICING
	06-13-2014	PRICING
	11-18-2013	40% CHFA
	09-19-2013	CAM/ SPECIAL PERMIT

PROJECT NO.: 21222
DRAWN BY: AF, SO
CHECKED BY:

SHEET TITLE

PLAN DETAILS

A-706

9/18/2014 3:30 PM

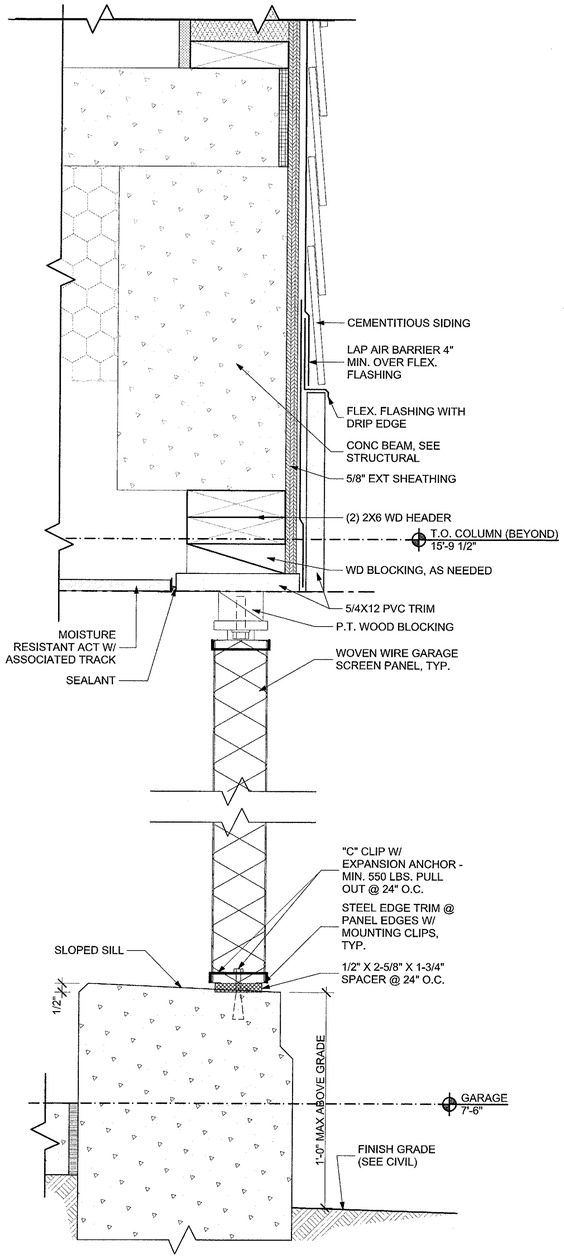

4 SECTION @ GARAGE SCREEN

SCALE: 3" = 1'-0"

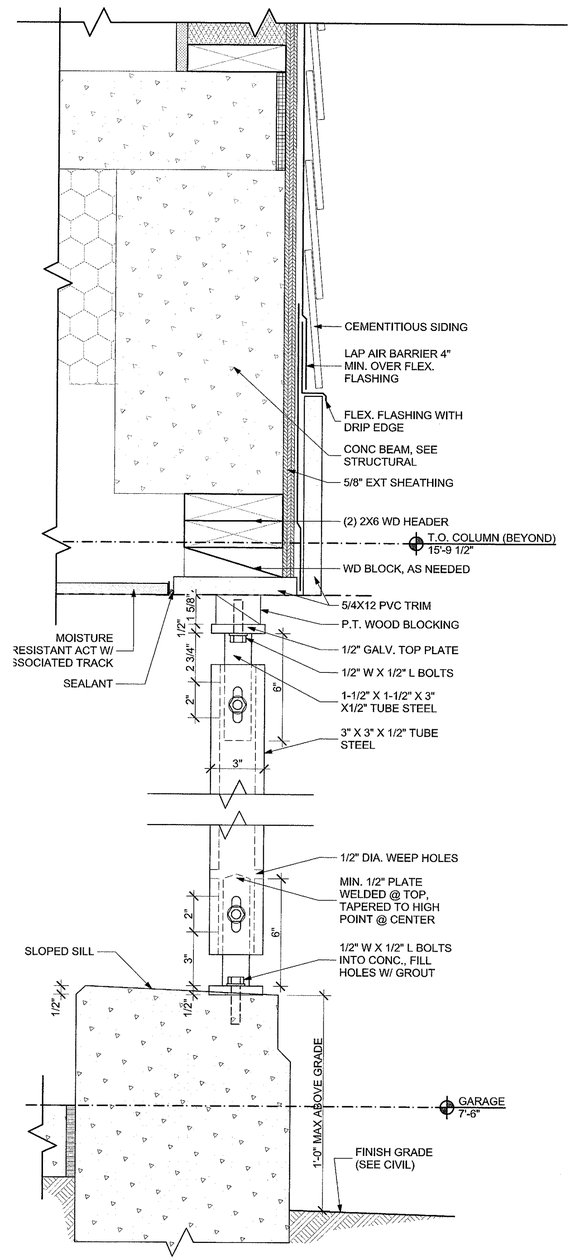

3 SECTION @ GARAGE SCREEN POST

SCALE: 3" = 1'-0"

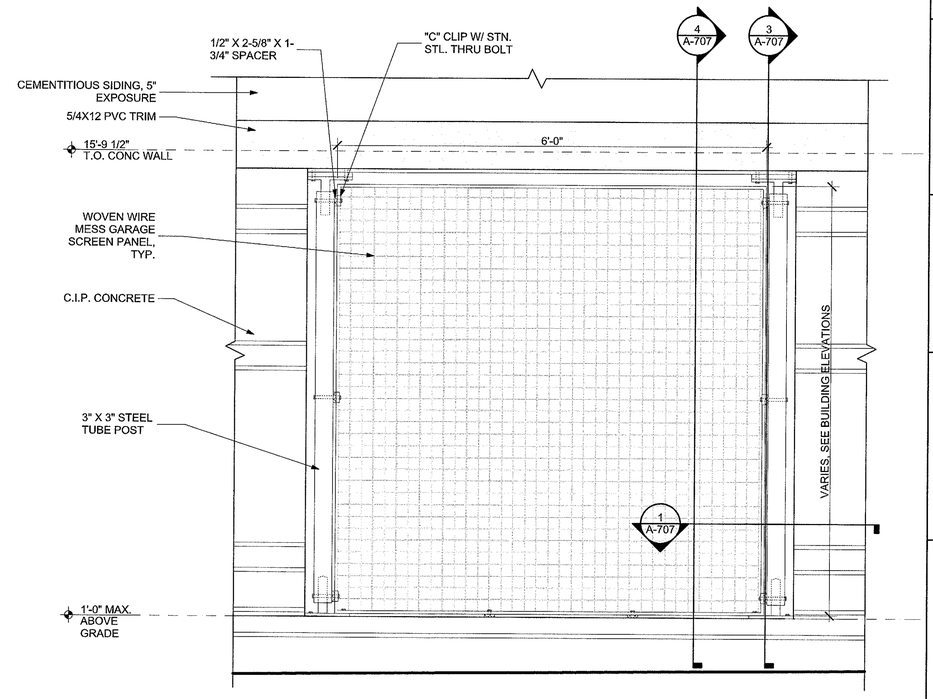

2 GARAGE SCREEN ELEVATION

SCALE: 1" = 1'-0"

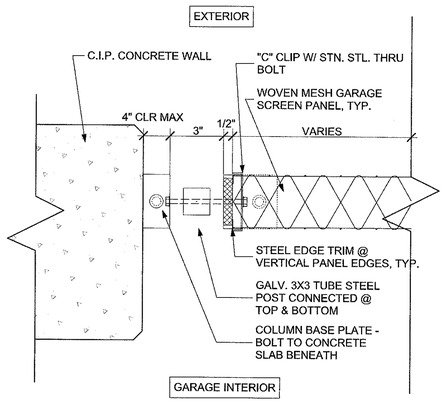

1 GARAGE SCREEN PLAN DETAIL

SCALE: 3" = 1'-0"

Washington Village Phase 1

20 Day Street Building B

Norwalk, CT

Trinity Washington Village Limited Partnership
&
the Norwalk Housing Authority

E-ICON ARCHITECTURE
101 SUMMER ST BOSTON MA 02110
617-451-3333 www.iconarch.com

CONSULTANT

STAMP

STATE OF CONNECTICUT · STEVEN A. HEIKIN · NO. 28654 · LICENSED ARCHITECT

MARK	DATE	DESCRIPTION
	09-19-2013	CAM/ SPECIAL PERMIT
	11-18-2013	40% CHFA
	06-13-2014	PRICING
	09-15-2014	PERMIT/ PRICING

PROJECT NO.: 21222
DRAWN BY: AF, SO
CHECKED BY:

SHEET TITLE

GARAGE SCREEN DETAILS

A-707

9/18/2014 3:30 PM

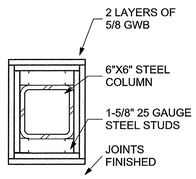

7 2HR FIRE-RATED STEEL COLUMN

SCALE: 1 1/2"= 1'-0"

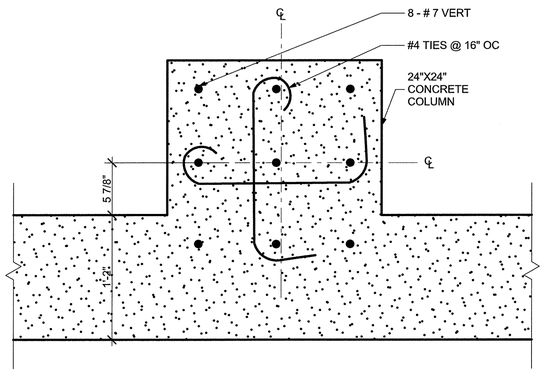

6 24"X24" COLUMN PLAN @EXTERIOIR WALL

SCALE: 1 1/2"= 1'-0"

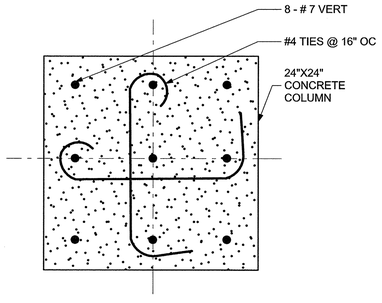

4 TYPICAL 24"X24" CONCRETE COLUMN

SCALE: 1 1/2"= 1'-0"

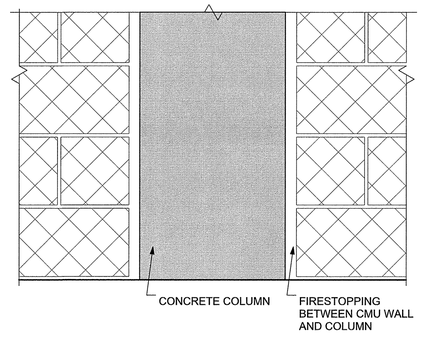

2 COLUMN ELEVATION @ CMU WALL

SCALE: 1 1/2"= 1'-0"

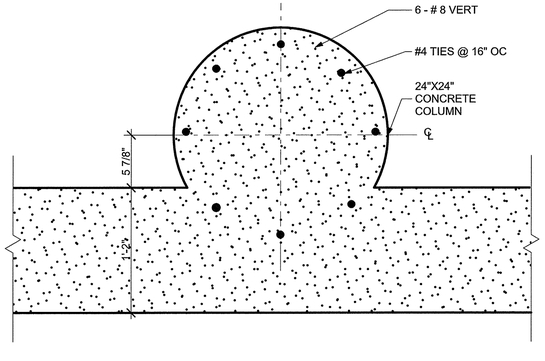

5 24" DIA. ROUND COLUMN PLAN @EXTERIOR WALL

SCALE: 1 1/2"= 1'-0"

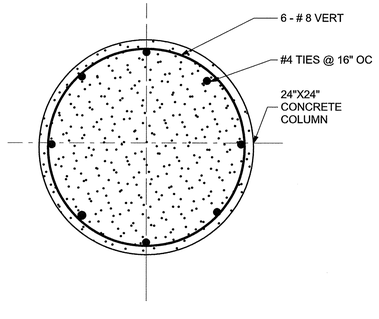

3 TYPICAL 24" DIA. ROUND STEEL COLUMN

SCALE: 1 1/2"= 1'-0"

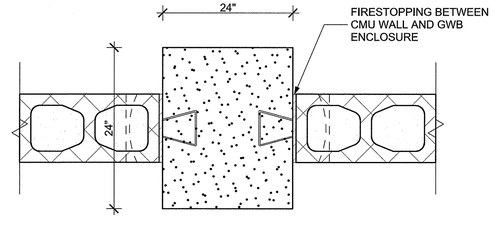

1 COLUMN PLAN @ CMU WALL

SCALE: 1 1/2"= 1'-0"

Washington Village Phase 1

20 Day Street Building B

Norwalk, CT

Trinity Washington Village Limited Partnership
&
the Norwalk Housing Authority

E-ICON ARCHITECTURE
101 SUMMER ST BOSTON MA 02110
617-451-3333 www.iconarch.com

CONSULTANT

STAMP

MARK	DATE	DESCRIPTION
	09-15-2014	PERMIT/ PRICING
	06-13-2014	PRICING
	11-18-2013	40% CHFA
	09-19-2013	CAM/ SPECIAL PERMIT

PROJECT NO.: 21222
DRAWN BY: AF/ KH
CHECKED BY:

SHEET TITLE

GARAGE DETAILS

A-708

10/15/2014 2:31:21 PM

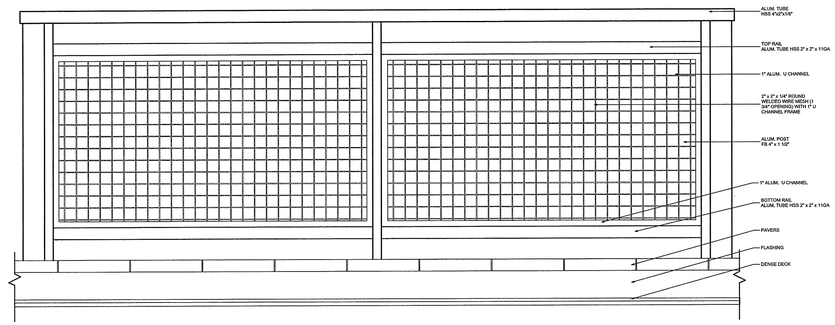

6 GUARD RAIL AT ROOF DECK ELEVATION

SCALE: 1" = 1'-0"

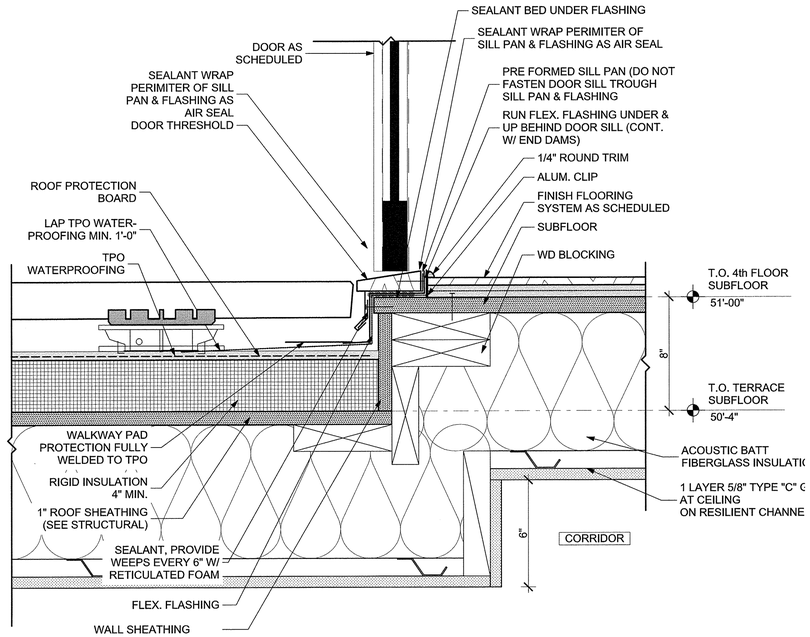

5 TYPICAL DETAIL @ 4TH FLOOR ROOF DECK

SCALE: 3" = 1'-0"

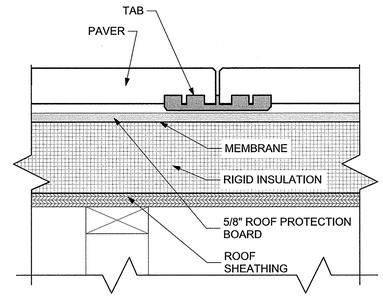

4 ROOF PAVERS AT JOINT

SCALE: 3" = 1'-0"

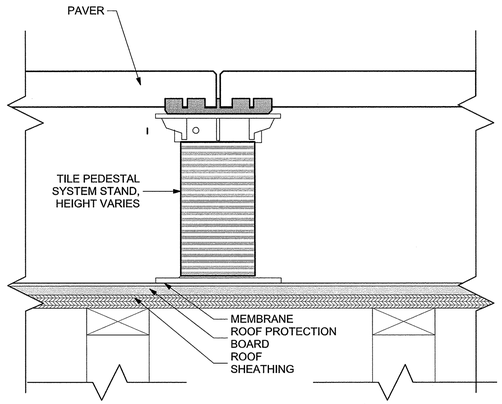

3 PEDISTAL PAVERES AT JOINT

SCALE: 3" = 1'-0"

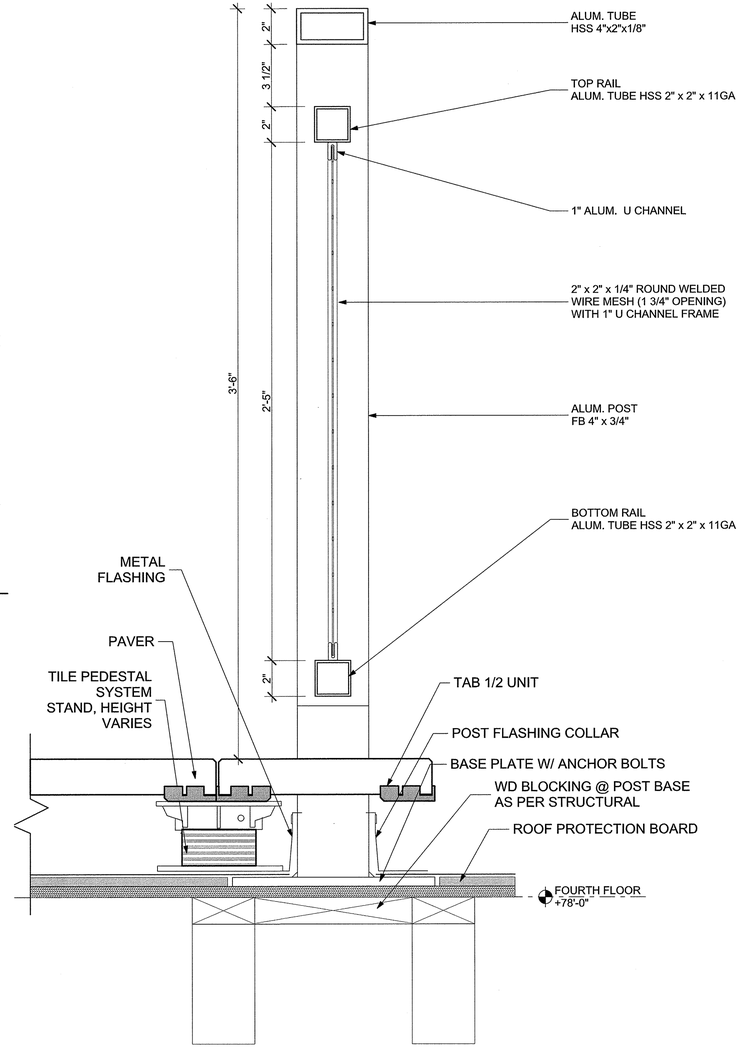

2 GUARD RAIL AT ROOF DECK

SCALE: 3" = 1'-0"

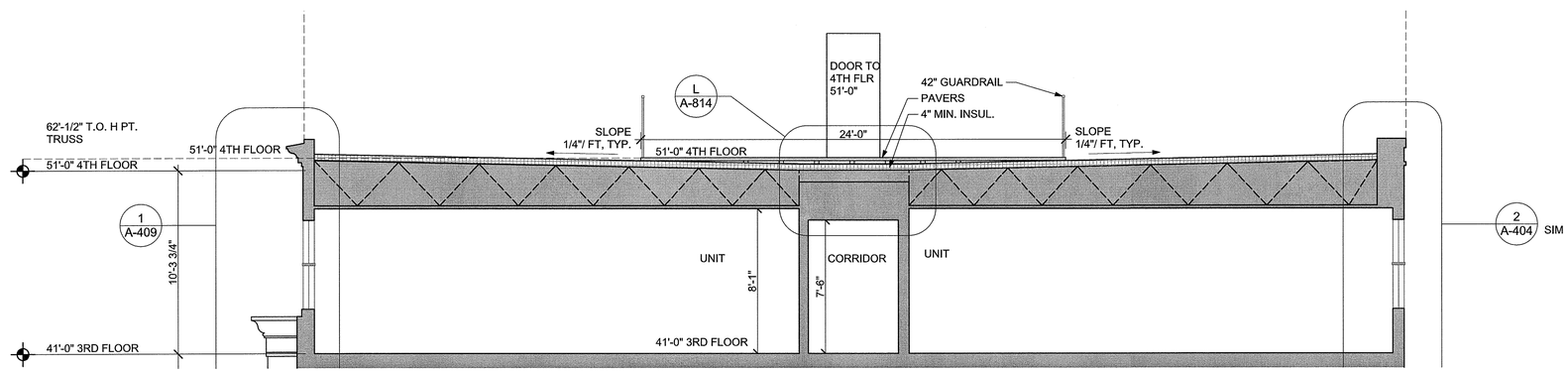

1 ROOF DECK SECTION DIAGRAM

SCALE: 1/4" = 1'-0"

Washington Village Phase 1

20 Day Street
Building B

Norwalk, CT

Trinity Washington Village Limited Partnership
&
the Norwalk Housing Authority

E-ICON ARCHITECTURE
101 SUMMER ST BOSTON MA 02110
617-451-3333 www.iconarch.com

CONSULTANT

STAMP

STATE OF CONNECTICUT · STEVEN A. HERN · NO. 19864 · LICENSED ARCHITECT

MARK	DATE	DESCRIPTION
	09-15-2014	PERMIT/ PRICING
	06-13-2014	PRICING
	11-18-2013	40% CHFA
	09-19-2013	CAM/ SPECIAL PERMIT

PROJECT NO.: 21222
DRAWN BY:
CHECKED BY:

SHEET TITLE

ROOF DECK DETAILS

A-709

9/14/2014 3:30 PM

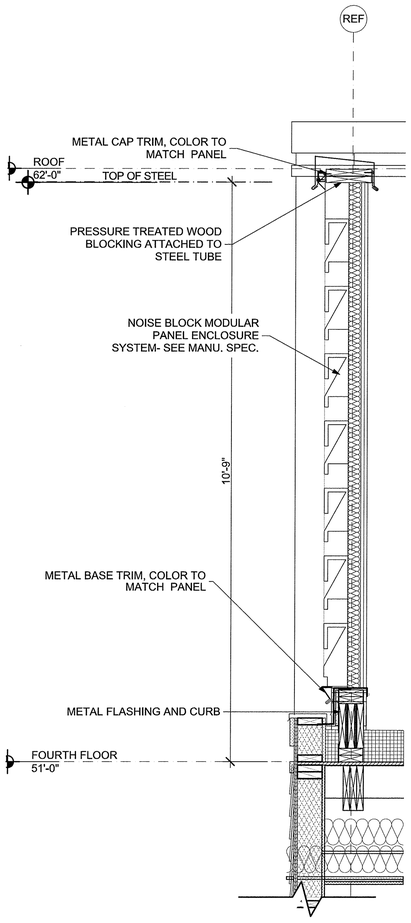

3 ACOUSTIC SCREEN DETAIL
SCALE: 3/4" = 1'-0"

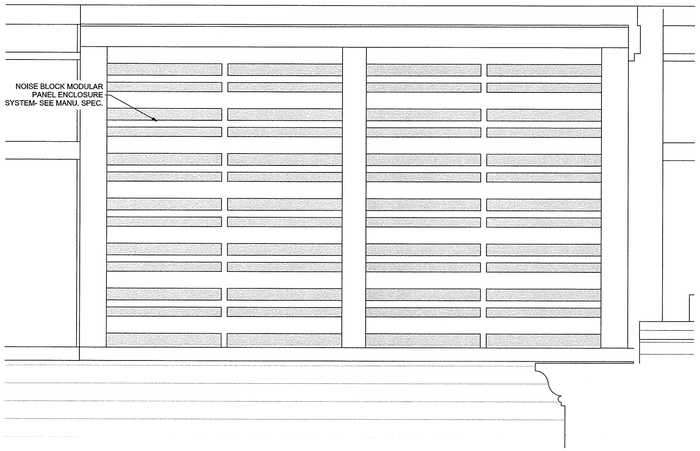

2 ELEVATION OF ACOUSTIC PANELS
SCALE: 1/2" = 1'-0"

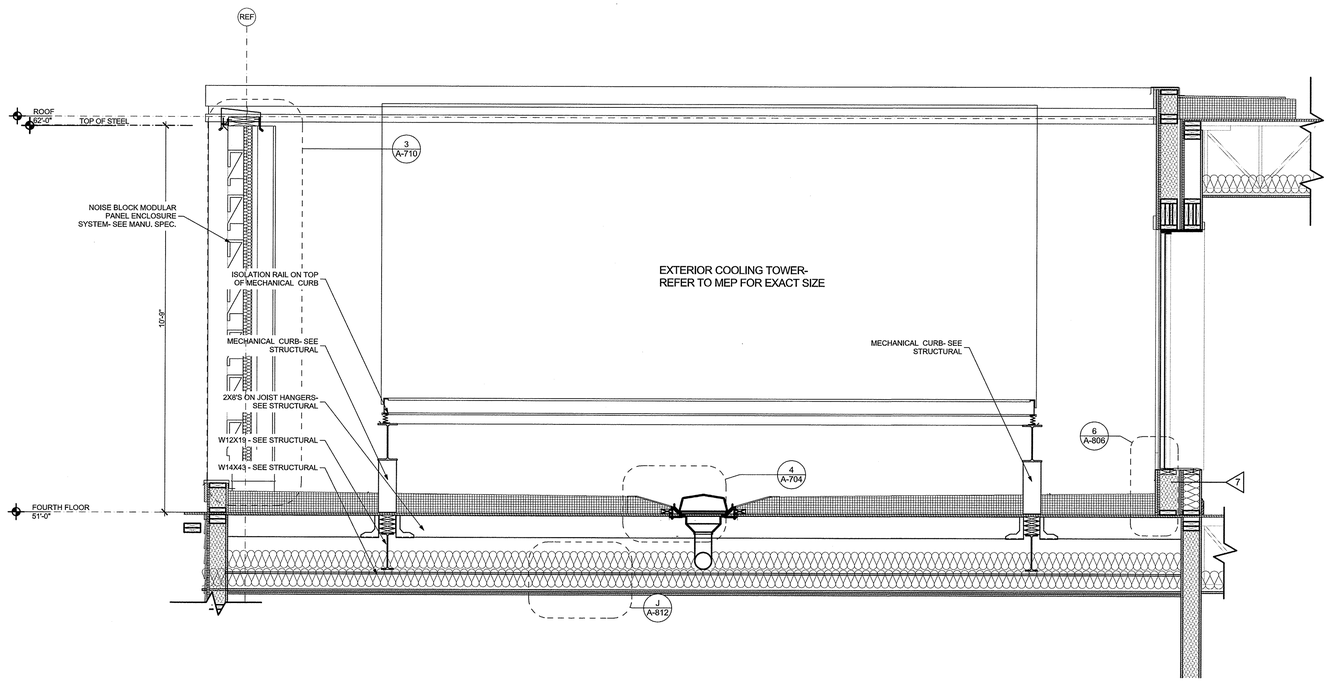

1 SECTION @ COOLING TOWER
SCALE: 1/2" = 1'-0"

Washington Village Phase 1

20 Day Street Building B

Norwalk, CT

Trinity Washington Village Limited Partnership
&
the Norwalk Housing Authority

E-ICON ARCHITECTURE
101 SUMMER ST BOSTON MA 02110
617-451-3333 www.iconarch.com

CONSULTANT

STAMP



MARK	DATE	DESCRIPTION
	09-15-2014	PERMIT/ PRICING
	06-13-2014	PRICING
	11-18-2013	40% CHFA
	09-19-2013	CAM/ SPECIAL PERMIT

PROJECT NO.: 21222
DRAWN BY:
CHECKED BY:

SHEET TITLE

COOLING TOWER DETAILS

A-710

9/18/2014 3:30 PM

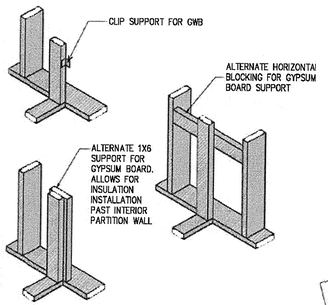

17 WALL FRAMING DETAIL

NOT TO SCALE

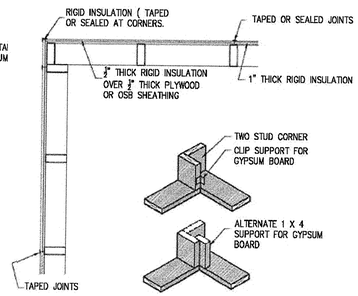

15 CORNER FRAMING/ BRACING DETAIL

NOT TO SCALE

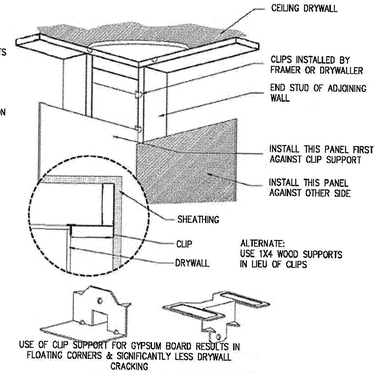

12 INSULATED HEADERS

NOT TO SCALE

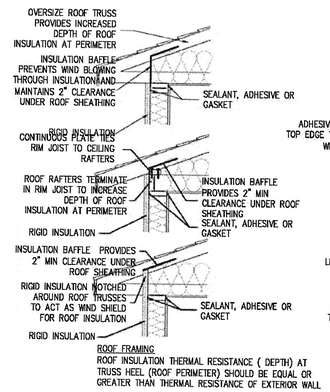

9 ROOF FRAMING DETAILS

NOT TO SCALE

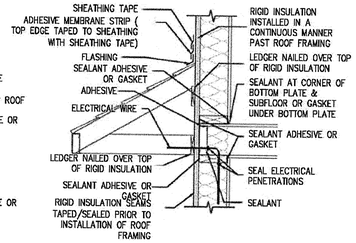

6 SHED ROOF DETAIL

NOT TO SCALE

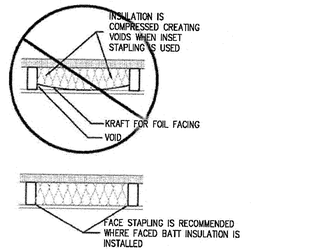

3 FACE STAPLING VS. INSET STAPLING

NOT TO SCALE

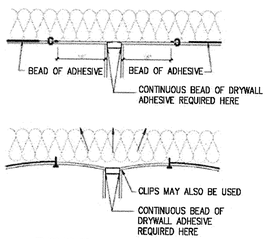

TRUSS UPLIFT
DO NOT INSTALL CEILING DRYWALL ADHESIVE OR CEILING DRYWALL SCREWS/NAILS CLOSER THAN 18" TO INTERIOR PARTITION IN ORDER TO CONTROL DRYWALL CRACKING FROM TRUSS UPLIFT.
FLOATING CORNERS OF CEILING DRYWALL ALLOW TRUSS MOVEMENT WITHOUT DRYWALL CRACKING NOTE THAT A CONTINUOUS BEAD OF DRYWALL ADHESIVE IS REQUIRED ALONG BOTH SIDES OF TOP PLATES FOR WALL. DRYWALL TO PROVIDE AIR BARRIER CONTINUITY.

16 CEILING GWB/TRUSS UPLIFT DETAIL

NOT TO SCALE

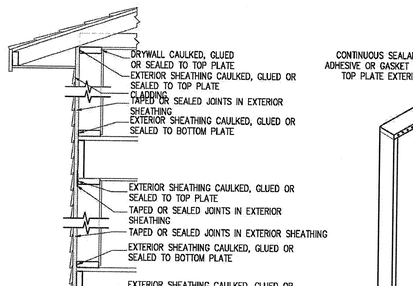

NOTE:
SHADED COMPONENTS DESIGNATE AIR FLOW RETARDER SYSTEM

14 EXT. AIR BARRIER @ EXT. SHEATHING

NOT TO SCALE

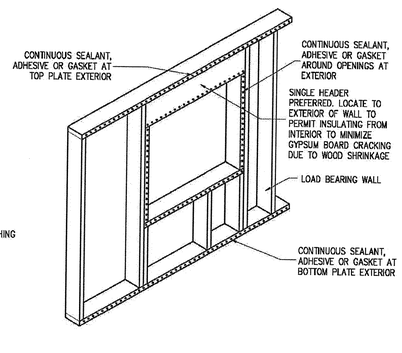

EXTERIOR RIGID INSULATION IS SEALED TO EXTERIOR OF WALL FRAMING AT TOP PLATES, BOTTOM PLATES AND AROUND OPENINGS.
HEADER IS NEEDED ABOVE WINDOW OPENING IF WALL IS LOAD BEARING
SINGLE HEADER RATHER THAN DOUBLE HEADER PREFERRED, SIZED APPROPRIATELY FOR LOAD.

11 EXT. AIR SEALING DETAIL

NOT TO SCALE

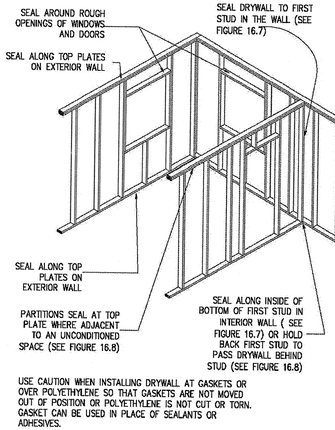

USE CAUTION WHEN INSTALLING DRYWALL AT GASKETS OR OVER POLYETHYLENE SO THAT GASKETS ARE NOT MOVED OUT OF POSITION OR POLYETHYLENE IS NOT CUT OR TORN. GASKET CAN BE USED IN PLACE OF SEALANTS OR ADHESIVES.

8 INT. AIR SEALING DETAIL

NOT TO SCALE

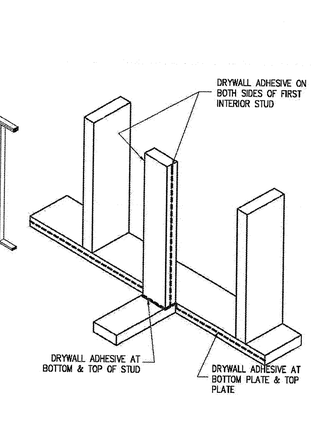

5 AIR SEALING DETAIL

NOT TO SCALE

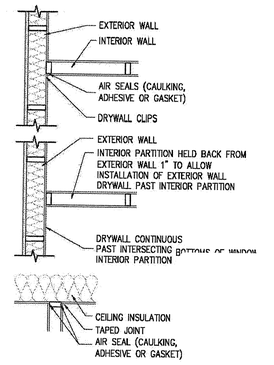

2 AIR SEALING DETAIL

NOT TO SCALE

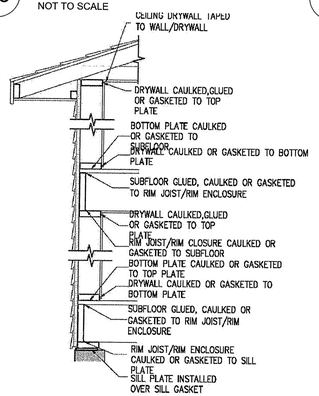

NOTE:
SHADED COMPONENTS DESIGNATE AIR FLOW RETARDER SYSTEM
AIRTIGHT DRYWALL APPROACH

13 INT. AIR BARRIER USING DRYWALL/FRAM

NOT TO SCALE

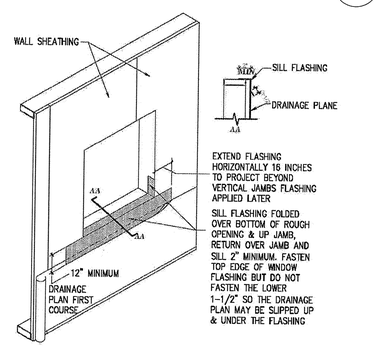

INSTALL SILL FLASHING
INSTALL JAMB FLASHING
INSTALL WINDOW
INSTALL HEAD FLASHING (IF NECESSARY)
INSTALL DRAINAGE PLANE SHINGLE FASHION FROM BOTTOM TO UNDERSIDE OF OPENING
INSTALL REMAINDER OF DRAINAGE PLANE SHINGLE FASHION FROM UNDERSIDE OF OPENING TO WALL OVER SIDE WINDOW FLANGE
WINDOWS/DOORS WITH FLANGES TYPICALLY INSTALLED IN BED OF SEALANT BETWEEN FLANGES AND JAMB & SILL FLASHING

10 SILL FLASHING DETAIL

NOT TO SCALE

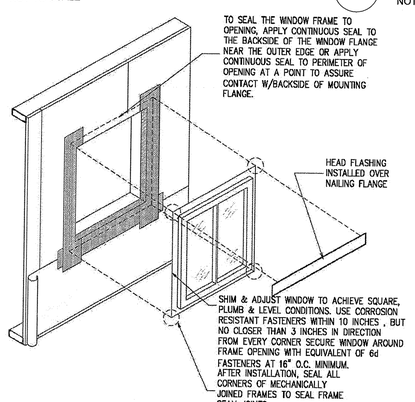

SOME WINDOWS ARE MANUFACTURED WITH AN INTERNAL HEAD FLASHING (SELF FLASHED) HOWEVER THESE SELF FLASHED WINDOWS CAN EXPERIENCE LEAKAGE AT UPPER CORNERS DUE TO LACK OF FLASHING EXTENSION BEYOND WINDOW OPENINGS. THESE CORNERS TYPICALLY NEED ADDITIONAL SEALING.

7 WINDOW INSTALLATION

NOT TO SCALE

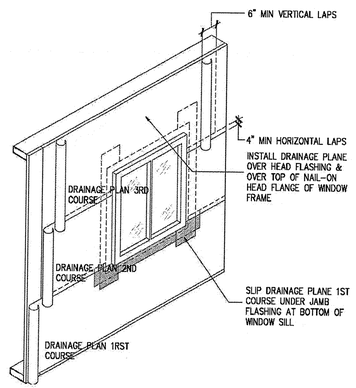

WINDOWS/DOORS WITHOUT FLANGES SEALED TO JAMB AND SILL FLASHING AROUND OPENING WITH SEALANT OVER BACKER ROD

4 DRAINAGE PLAN APP.

NOT TO SCALE

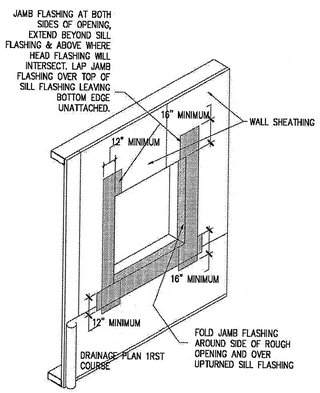

THIS APPROACH MAY ELIMINATE THE NEED FOR ADDITIONAL BATT INSULATION TO INTERIOR

1 JAMB FLASHING DETAIL

NOT TO SCALE

Washington Village Phase 1

20 Day Street
Building B

Norwalk, CT

Trinity Washington Village Limited Partnership
&
the Norwalk Housing Authority

E-ICON ARCHITECTURE
101 SUMMER ST BOSTON MA 02110
617-451-3333 www.iconarch.com

CONSULTANT

STAMP

STATE OF CONNECTICUT · STEVEN A. HEIKKI · NO. 28864 · REGISTERED ARCHITECT

MARK	DATE	DESCRIPTION
	09-15-2014	PERMIT/ PRICING
	06-13-2014	PRICING
	11-18-2013	40% CHFA
	09-19-2013	CAM/ SPECIAL PERMIT

PROJECT NO.: 21222
DRAWN BY:
CHECKED BY:

SHEET TITLE

TYP. SEALING DETAILS

A-711

9/18/2014 3:30:21 PM

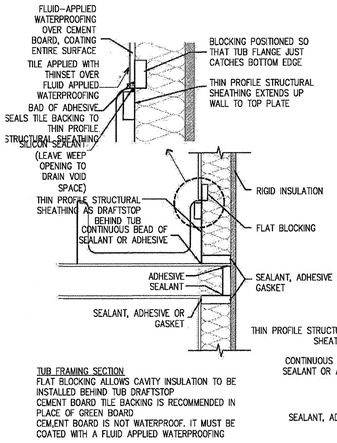

TUB FRAMING SECTION
FLAT BLOCKING ALLOWS CAVITY INSULATION TO BE INSTALLED BEHIND TUB DRAFTSTOP
CEMENT BOARD TILE BACKING IS RECOMMENDED IN PLACE OF GREEN BOARD
CEM,ENT BOARD IS NOT WATERPROOF. IT MUST BE COATED WITH A FLUID APPLIED WATERPROOFING

20 TUB FRAMING SECTION
NOT TO SCALE

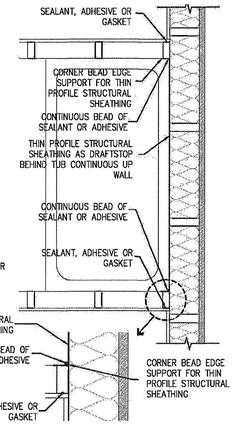

17 TUB FRAMING PLAN
NOT TO SCALE

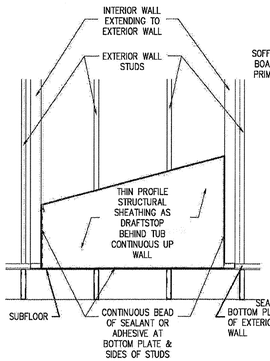

14 TUB FRAMING ELEVATION
NOT TO SCALE

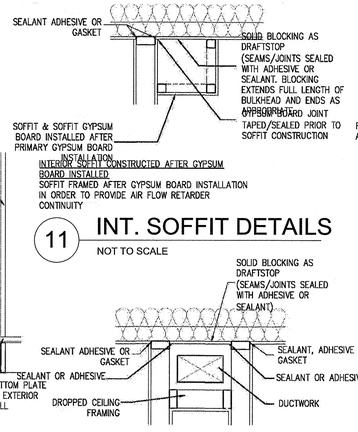

11 INT. SOFFIT DETAILS
NOT TO SCALE

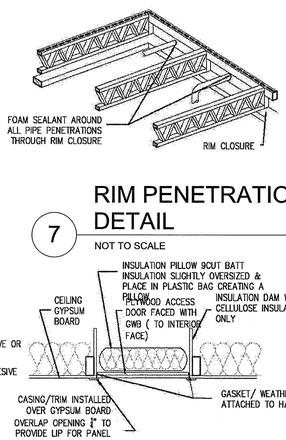

7 RIM PENETRATION DETAIL
NOT TO SCALE

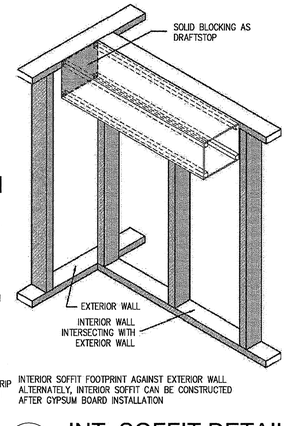

INTERIOR SOFFIT FOOTPRINT AGAINST EXTERIOR WALL ALTERNATELY, INTERIOR SOFFIT CAN BE CONSTRUCTED AFTER GYPSUM BOARD INSTALLATION

3 INT. SOFFIT DETAIL
NOT TO SCALE

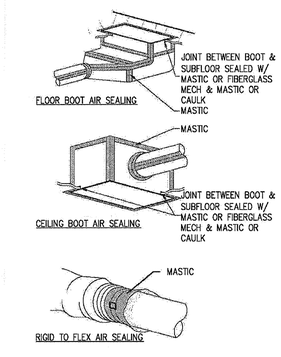

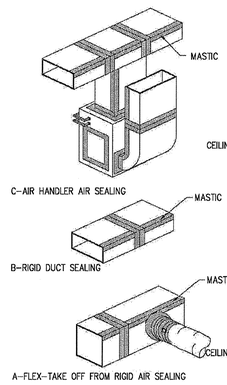

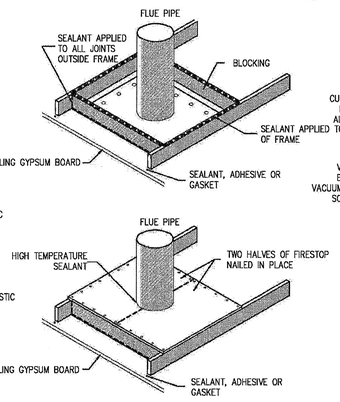

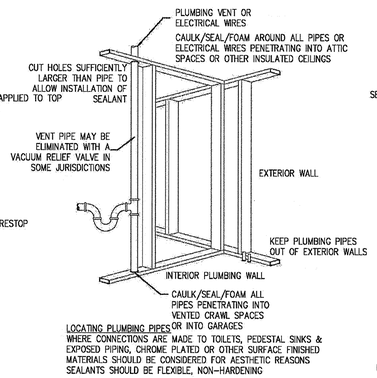

LOCATING PLUMBING PIPES
WHERE CONNECTIONS ARE MADE TO TOILETS, PEDESTAL SINKS & EXPOSED PIPING, CHROME PLATED OR OTHER SURFACE FINISHED MATERIALS SHOULD BE CONSIDERED FOR AESTHETIC REASONS
SEALANTS SHOULD BE FLEXIBLE, NON-HARDENING

9 PLUMBING PIPE DETAIL
NOT TO SCALE

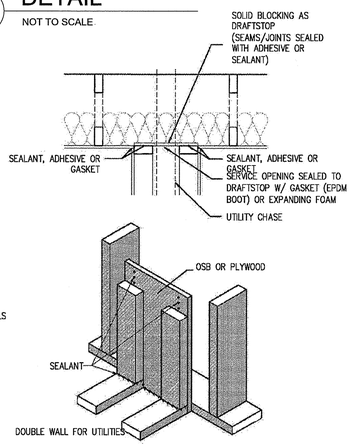

5 CHASE DRAFTSTOPPING DETAIL
NOT TO SCALE

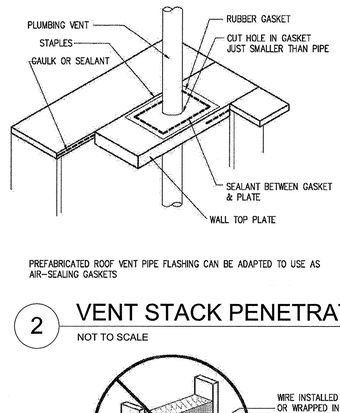

PREFABRICATED ROOF VENT PIPE FLASHING CAN BE ADAPTED TO USE AS AIR-SEALING GASKETS

2 VENT STACK PENETRATION
NOT TO SCALE

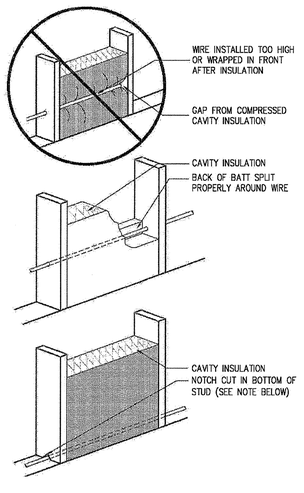

ALTERNATE WIRING WITH BATT INSULATION DETAIL
NOTE: SOME CODES REQUIRE WIRES TO BE HELD UP FROM BOTTOM PLATE 6" TO 8" TO PROTECT WIRES FROM FUTURE DRILLING OF HOLES THROUGH PLATE

1 WIRING IN BATT INSUL.
NOT TO SCALE

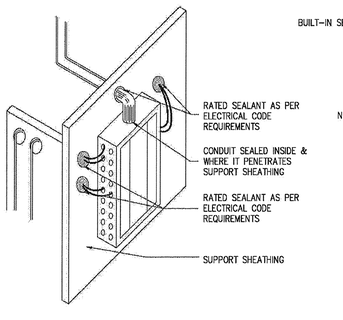

WIRES SHOULD BE LOCATED ALONG PLATES OR AGAINST STUDS RATHER THAN THROUGH THE CENTER OF INSULATED CAVITIES TO MINIMIZE INSULATION COMPRESSION WHERE BATT INSULATION IS USED (FIGURE 15.2)

18 ELECTRICAL PANEL DETAIL
NOT TO SCALE

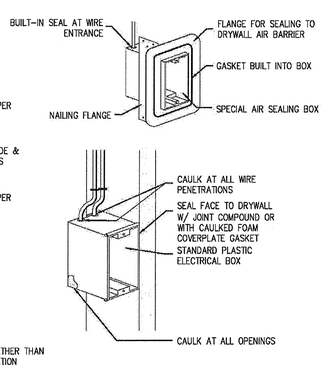

15 ELECTRICAL BOX DETAIL
NOT TO SCALE

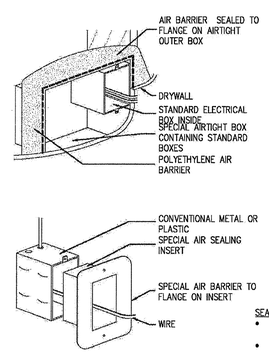

12 ALT. ELECTRICAL BOX DETAIL
NOT TO SCALE

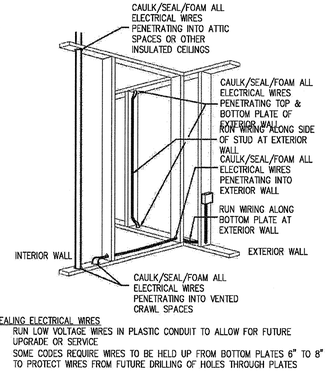

SEALING ELECTRICAL WIRES
- RUN LOW VOLTAGE WIRES IN PLASTIC CONDUIT TO ALLOW FOR FUTURE UPGRADE OR SERVICE
- SOME CODES REQUIRE WIRES TO BE HELD UP FROM BOTTOM PLATES 6" TO 8" TO PROTECT WIRES FROM FUTURE DRILLING OF HOLES THROUGH PLATES

8 ELECTRICAL WIRE SEALING
NOT TO SCALE

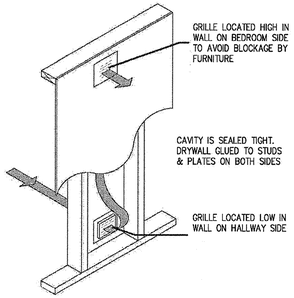

4 TRANSFER GRILL DIAGRAM
NOT TO SCALE

Washington Village Phase 1

20 Day Street Building B

Norwalk, CT

Trinity Washington Village Limited Partnership
&
the Norwalk Housing Authority

E-ICON ARCHITECTURE
101 SUMMER ST BOSTON MA 02110
617-451-3333 www.iconarch.com

CONSULTANT

STAMP

STATE OF CONNECTICUT · STEVEN A. HEIRAN · NO. 8662 · REGISTERED ARCHITECT

MARK	DATE	DESCRIPTION
	09-15-2014	PERMIT/ PRICING
	06-13-2014	PRICING
	11-18-2013	40% CHFA
	09-19-2013	CAM/ SPECIAL PERMIT

PROJECT NO.: 21222
DRAWN BY:
CHECKED BY:

SHEET TITLE

TYP. SEALING DETAILS

A-712

10/8/2014 2:30 PM

BUILDING B CAST STONE SCHEDULE				
TYPE	SIZE			NOTES/REMARKS
	WIDTH	HEIGHT	DEPTH	
CS 1	VARIES	9 3/4"	3 5/8"	BASE
CS 2	VARIES	7 5/8"	3 5/8"	LINTEL
CS 3	VARIES	7 5/8"	3 5/8"	BANDING
CS 4	VARIES	4 1/4"	3 5/8"	SILL
CS 5	VARIES	7 5/8"	3 5/8"	CURVED LINTEL

BUILDING B WINDOW SCHEDULE							
TYPE	SIZE		MATL.	DETAIL			NOTES/REMARKS
	WIDTH	HEIGHT		HEAD	JAMB	SILL	
A	2'-6"	5'-0"	FIBERGLASS	6/A-802	5/A-802	4/A-802	
A1	2'-6"	5'-0"	FIBERGLASS	3/A-802	2/A-802	1/A-802	
B	5'-0"	5'-0"	FIBERGLASS	6/A-802	5/A-802	4/A-802	
B1	5'-0"	5'-0"	FIBERGLASS	3/A-802	2/A-802	1/A-802	
C	6'-0"	6'-0"	FIBERGLASS	6/A-802	5/A-802	4/A-802	
C1	6'-0"	6'-0"	FIBERGLASS	3/A-802	2/A-802	1/A-802	
D	6'-0"	5'-0"	FIBERGLASS	6/A-802	5/A-802	4/A-802	
E	8'-8"	5'-10"	FIBERGLASS	8/A-802	8/A-802	7/A-802	INTERIOR
F	2'-6"	3'-0"	FIBERGLASS	6/A-802	5/A-802	4/A-802	

CAST STONE ELEVATIONS

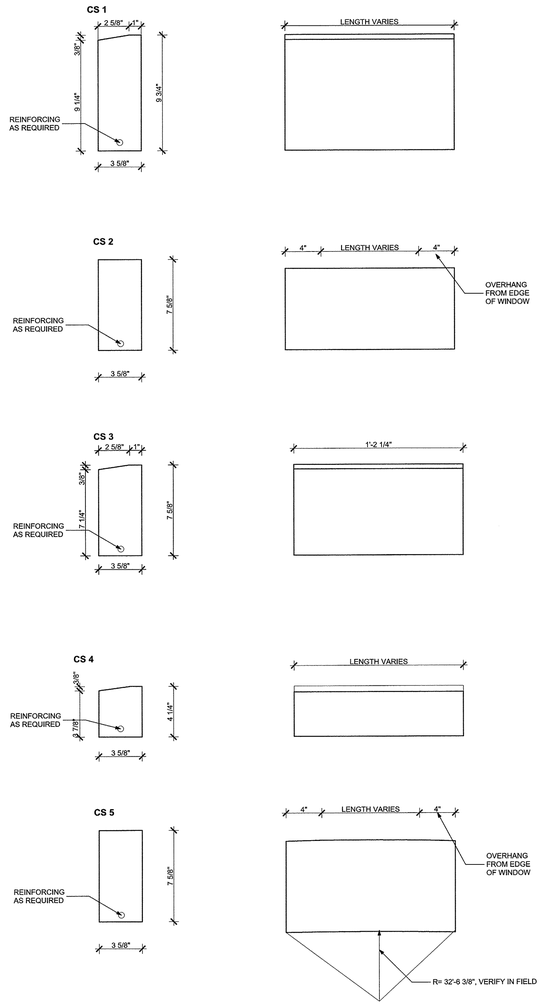

WINDOW ELEVATIONS

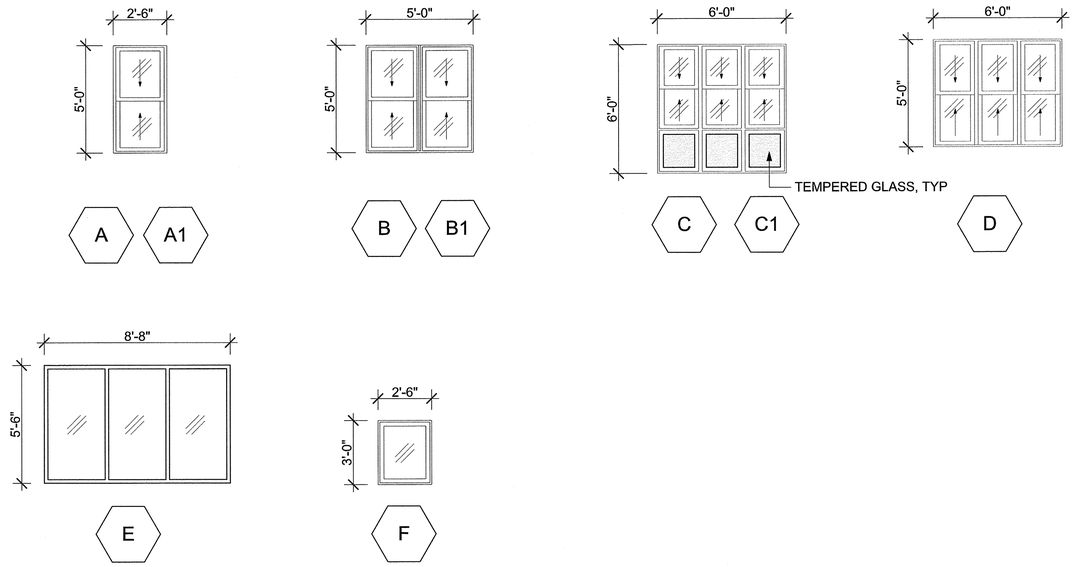

NOTE: ALL OPERABLE WINDOWS ONLY OPEN 4" FOR CHILDGUARD REQUIREMENTS

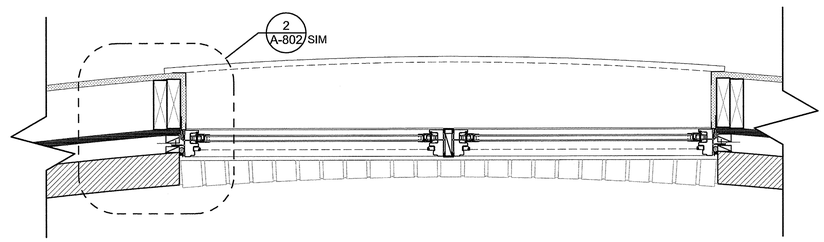

1 B1 WINDOW PLAN DETAIL - CURVED WALL

SCALE: 1 1/2"= 1'-0"

Washington Village Phase 1

20 Day Street Building B

Norwalk, CT

Trinity Washington Village Limited Partnership
&
the Norwalk Housing Authority

E-ICON ARCHITECTURE
101 SUMMER ST BOSTON MA 02110
617-451-3333 www.iconarch.com

CONSULTANT

STAMP



MARK	DATE	DESCRIPTION
	09-15-2014	PERMIT/ PRICING
	06-13-2014	PRICING
	11-18-2013	40% CHFA
	09-19-2013	CAM/ SPECIAL PERMIT

PROJECT NO.: 21222
DRAWN BY: GA, SO, BD
CHECKED BY:

SHEET TITLE

WINDOW & CAST STONE SCHEDULE

A-801

9/18/2014 3:30 PM

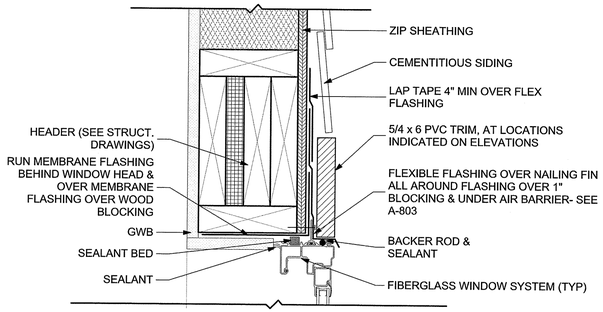

6 HEAD @ SIDING
SCALE: 3" = 1'-0"

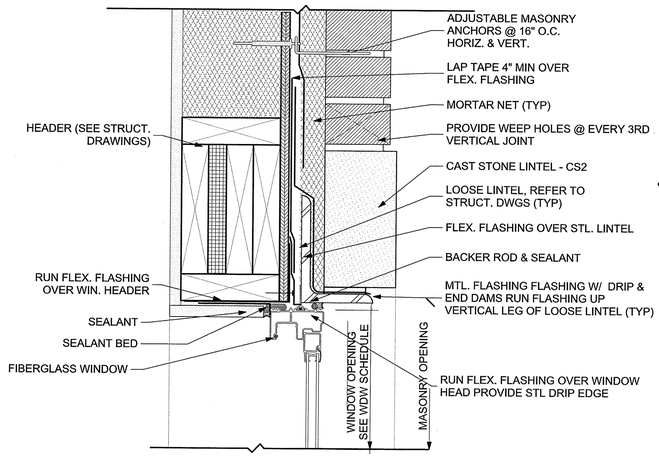

3 HEAD @ BRICK
SCALE: 3" = 1'-0"

HEAD

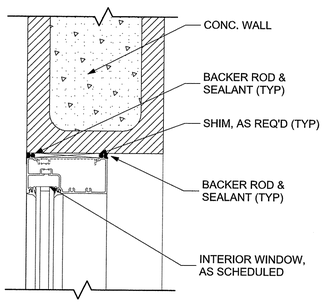

8 INT. WINDOW HEAD/JAMB DTL @ CONC
SCALE: 3" = 1'-0"

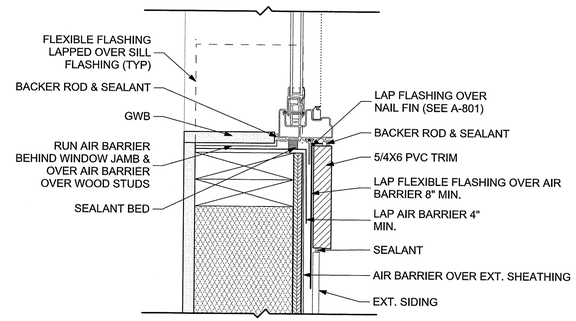

5 JAMB @ SIDING
SCALE: 3" = 1'-0"

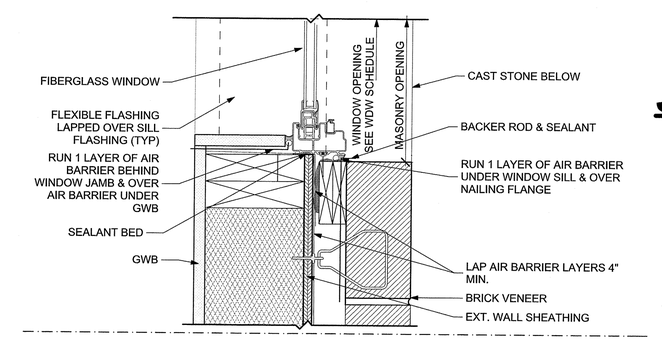

2 JAMB @ BRICK
SCALE: 3" = 1'-0"

JAMB

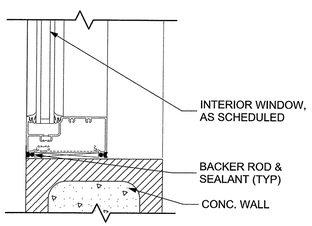

7 INT. WINDOW SILL DTL @ CONC
SCALE: 3" = 1'-0"

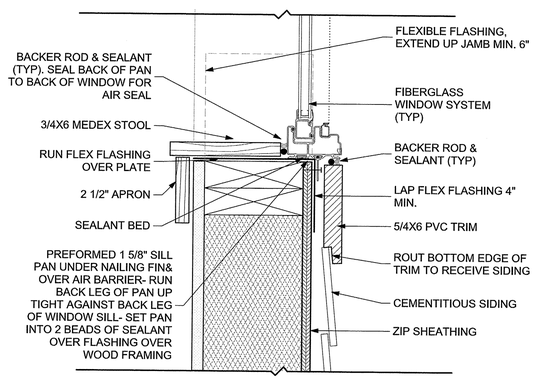

4 SILL @ SIDING
SCALE: 3" = 1'-0"

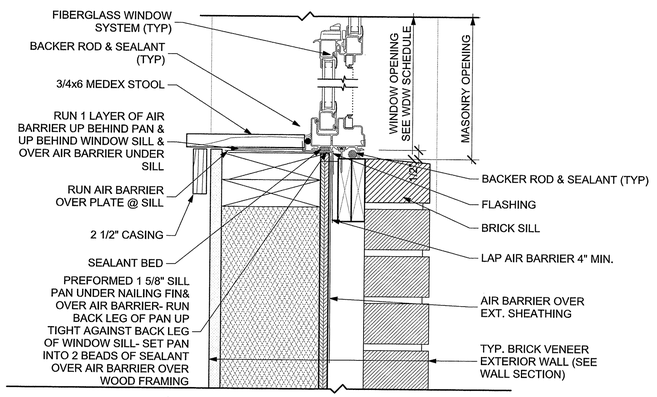

1 SILL @ BRICK
SCALE: 3" = 1'-0"

SILL

Washington Village
Phase 1

20 Day Street
Building B

Norwalk, CT

Trinity Washington Village Limited Partnership
&
the Norwalk Housing Authority

E-ICON ARCHITECTURE
101 SUMMER ST BOSTON MA 02110
617-451-3333 www.iconarch.com

CONSULTANT

STAMP

STATE OF CONNECTICUT
BRIEN A. HEANY
NO. 8864
REGISTERED ARCHITECT

MARK	DATE	DESCRIPTION
	09-19-2013	CAM/ SPECIAL PERMIT
	11-18-2013	40% CHFA
	06-13-2014	PRICING
	09-15-2014	PERMIT/ PRICING

PROJECT NO.: 21222
DRAWN BY: AF, BD
CHECKED BY:

SHEET TITLE

WINDOW DETAILS

A-802

9/15/2014 3:43:16 PM

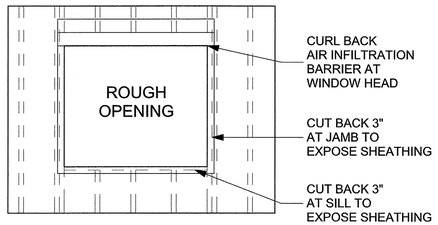

STEP 1 - FOLD BACK AIR INFILTRATION BARRIER - HEAD ONLY

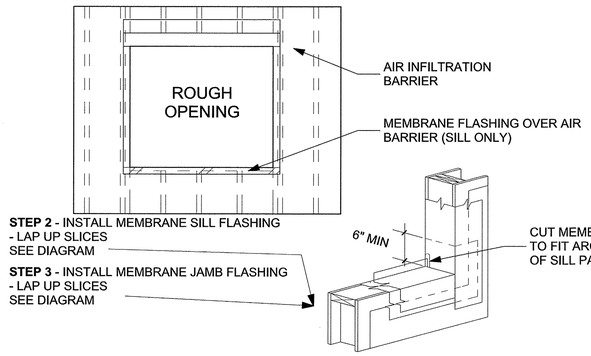

STEP 2 - INSTALL MEMBRANE SILL FLASHING - LAP UP SLICES SEE DIAGRAM

STEP 3 - INSTALL MEMBRANE JAMB FLASHING - LAP UP SLICES SEE DIAGRAM

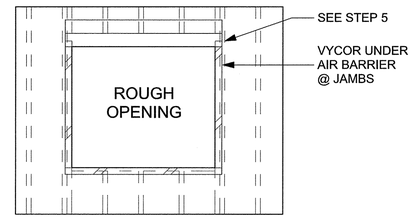

STEP 4 - INSTALL MEMBRANE FLASHING @ WINDOW HEAD.

STEP 5 - INSTALL PREFORMED SILL PANS

LAP JAMB FLASHING OVER SILL FLASHING
EXTEND JAMB MEMBRANE PAST ROUGH OPENING AT HEAD

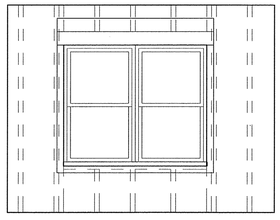

STEP 6 - INSTALL WINDOW PER MANUFACTURER'S INSTRUCTIONS. SEAL THE WINDOW. SET WINDOW IN A BED OF SEALANT. **DO NOT CAULK OVER SILL PAN WEEPS IN THE CORNERS!**

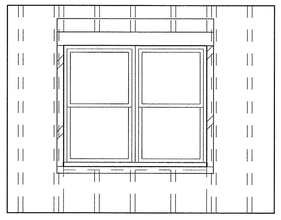

STEP 7 - LAP SECOND LAYER OF FLASHING OVER WINDOW NAILING FIN AT JAMBS ONLY BUT UNDER AIR BARRIER.

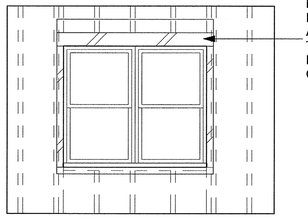

STEP 8 - AT WINDOW HEAD, INSTALL MEMBRANE FLASHING OVER WINDOW NAILING FIN.

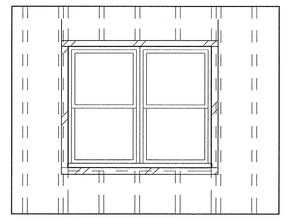

STEP 9 - LAP AIR INFILTRATION BARRIER OVER HEAD FLASHING. TAPE AIR BARRIER TO MEMBRANE FLASHING TIGHT TO WINDOW AT JAMB & HEAD USING AIR BARRIER TAPE.

WINDOW FLASHING AND INSTALLATION SEQUENCE

PROVIDE SEALANT @ INSIDE & OUTSIDE FACE OF NAILING FIN

INSTALL AIR INFILTRATION AND WEATHER BARRIER (AB) IN AN OVERLAPPING PATTERN, WITH EACH STRIP OVERLAPPING THE LOWER STRIP BY 4 INCHES. OVERLAP VERTICAL JOINTS BY 6", OR TAPE VERTICAL JOINTS.

STEP 1. CUT AIR BARRIER AT WINDOW OPENING 3" BIGGER THAN THE R.O. EXPOSING THE SHEATHING AT THE HEAD AND JAMBS. (FOR EXAMPLE, IF THE RO IS 3'X 5' THE AIR BARRIER WILL BE 3'-6" X 5'-3") CUT THE AB FLUSH WITH THE BOTTOM OF THE R.O. AND CURL THE AB UP AND TAPE UNTIL THE FINAL STEP.

STEP 2. AT THE SILL; CUT A PIECE OF MEMBRANE FLASHING 12" LONGER THAN THE SILL R.O. LENGTH, AND WIDE ENOUGH TO COVER THE SILL FRAMING AND LAP DOWN 3" ONTO THE AB. INSTALL THE FLASHING ON THE SILL WITH 6" LAPPED UP BOTH SIDES.

STEP 3. AT THE JAMBS; CUT 2 PIECES OF MEMBRANE FLASHING 12" LONGER THAN THE VERTICAL R.O. LENGTH, AND WIDE ENOUGH TO COVER THE JAMB FRAMING BY 5" AND LAP 3" ONTO THE SHEATHING. INSTALL THE FLASHING AT THE JAMBS 6" PAST THE TOP AND BOTTOM OF THE R.O. AND LAP OVER THE SILL FLASHING.

STEP 4. AT THE HEAD; CUT A PIECE OF MEMBRANE FLASHING 12" LONGER THAN THE HEAD R.O. LENGTH, AND WIDE ENOUGH TO COVER 5" AT THE BOTTOM OF THE FRAMING MEMBERS AND LAP 3" UP ONTO THE SHEATHING.

STEP 5. INSTALL PREFORMED PVC SILL PAN IN A BED OF SEALANT. CUT TWO 6"X 6" PIECES OF FLASHING AND INSTALL OVER THE ENDS OF THE PVC PAN TO THE EXISTING JAMB FLASHING.

STEP 6. (INSTALL WINDOW PER MANUFACTURES INSTRUCTIONS.) CAULK PERIMETER OF WINDOW R.O. DO NOT CAULK OVER PVC PAN WEEPS!!! INSTALL WINDOW PLUMB AND LEVEL. TACK CORNERS. VERIFY WINDOW SASHES OPERATE SMOOTHLY. NAIL IN THE MIDDLE OF THE NAILING SLOT TO ALLOW FOR EXPANSION AND CONTRACTIONS. NAIL EVERY NAIL SLOT. SHIM WINDOW AT MEETING RAIL SO THE WINDOW WIDTH IS THE SAME AS THE BOTTOM AND TOP. CAULK UP THE JAMBS 2".

STEP 7. CUT 2 PIECES OF 6" WIDE FLASHING 12" LONGER THAN THE HEIGHT OF THE WINDOW. INSTALL 6" ABOVE THE WINDOW AND OVER THE NAILING FLANGE AT THE SIDES OF THE WINDOW.

STEP 8. CUT 6" WIDE FLASHING 12" LONGER THAN WINDOW WIDTH. INSTALL AT TOP OF WINDOW OVER THE NAILING FLANGE TO THE SHEATHING WITH 6" EXTENDING PAST THE WINDOW (BELOW THE AB) ON BOTH SIDES.

STEP 9. FOLD BACK THE AB OVER THE FLASHING AND TAPE ALL EDGES TO THE FLASHING. THIS IS IMPORTANT AS THIS CONNECTS THE FLASHING TO AB.

STEP 10. (NOT SHOWN) PROVIDE INTERIOR SEAL AROUND WINDOW PERIMETER TO MAINTAIN CONTINUITY OF BUILDING THERMAL AND AIR BARRIER USING INSULATING-FOAM SEALANT.

STEP 11. (NOT SHOWN) SEAL WINDOW TO EXTERIOR WALL CLADDING WITH SEALANT AND RELATED BACKING MATERIALS AT PERIMETER OF ASSEMBLY.

Washington Village Phase 1

20 Day Street Building B

Norwalk, CT

Trinity Washington Village Limited Partnership
&
the Norwalk Housing Authority

E-ICON ARCHITECTURE
101 SUMMER ST BOSTON MA 02110
617-451-3333 www.iconarch.com

CONSULTANT

STAMP



MARK	DATE	DESCRIPTION
	09-15-2014	PERMIT/ PRICING
	06-13-2014	PRICING
	11-18-2013	40% CHFA
	09-19-2013	CAM/ SPECIAL PERMIT

PROJECT NO.: 21222
DRAWN BY: IM, SO
CHECKED BY:

SHEET TITLE

WINDOW FLASHING PROCEDURE

A-803

9/19/2014 10:30 AM

DOOR TYPES

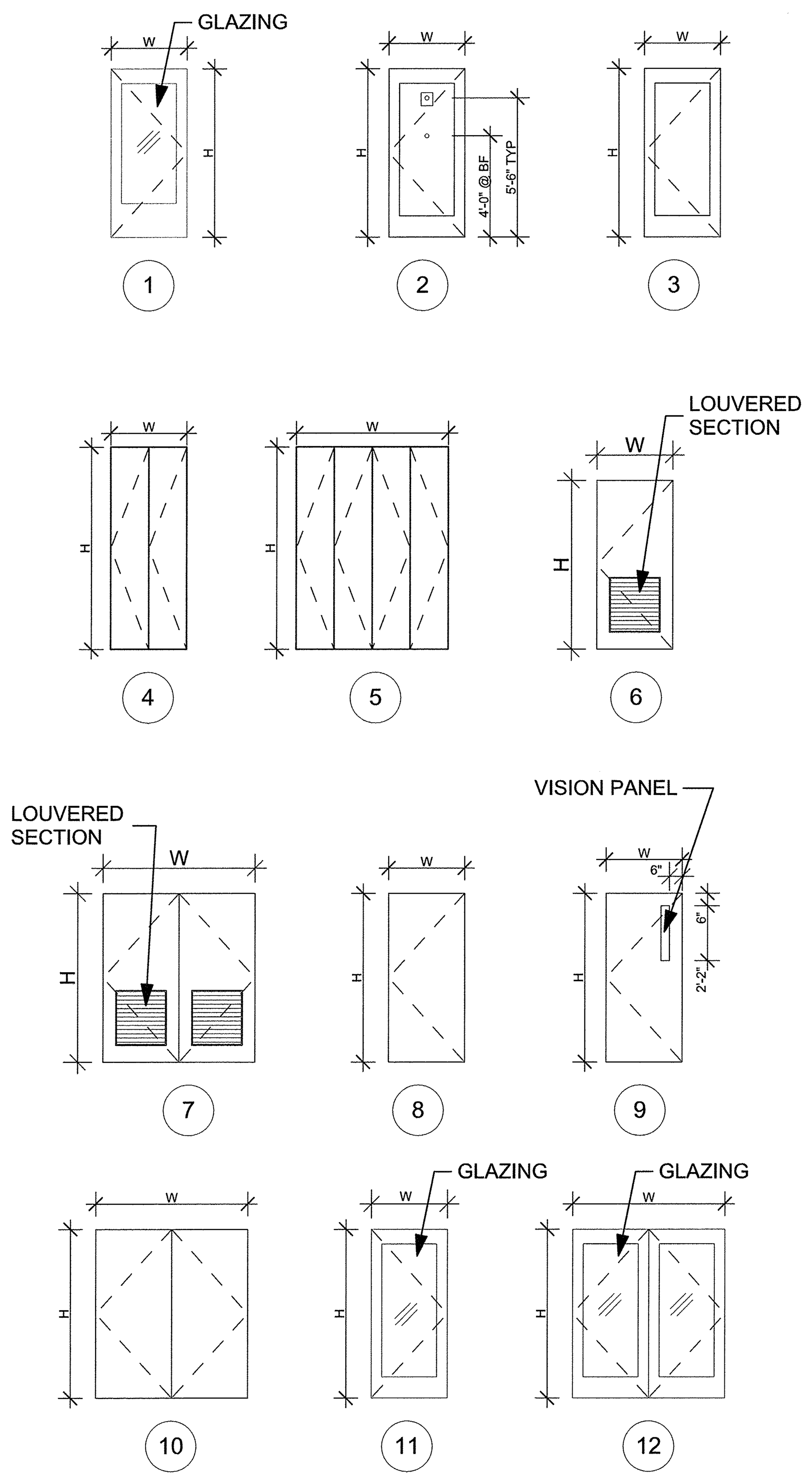

FRAME TYPES

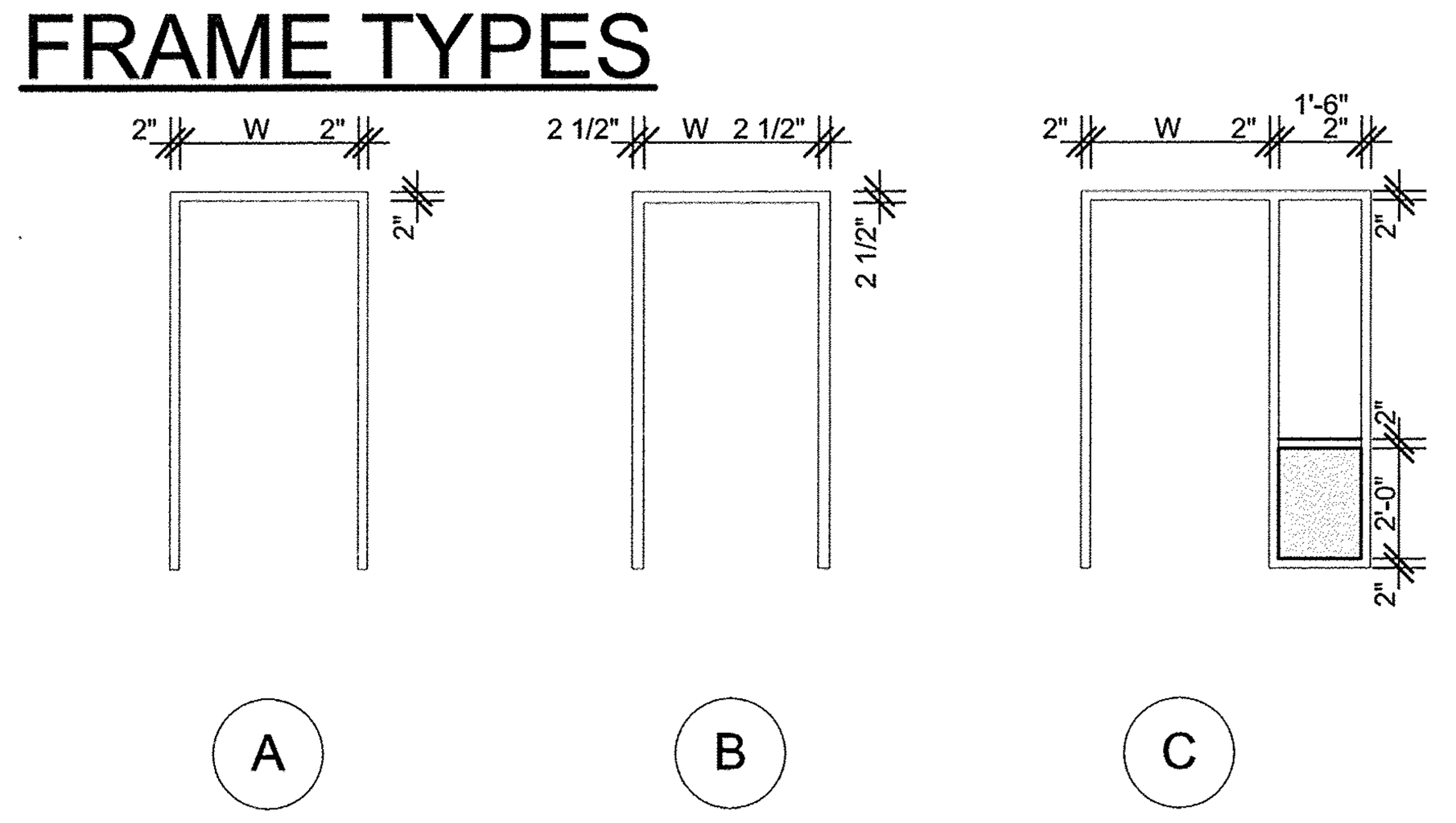

DOOR & FRAME SCHEDULE

	DOOR NO.	SIZE W	SIZE H	SIZE THICKNESS	DESCRIPTION	OPERATION	DOOR ELEV.	DOOR MATL.	DOOR FINISH	FRAME TYPE	FRAME MATL.	FRAME FINISH	DETAIL HEAD	DETAIL JAMB	DETAIL SILL	HARDWARE SET	FIRE RATING	NOTES
UNIT DOORS	A	3'-0"	6-'8"	1 3/4"	BEDROOM	SWING, SINGLE	3	WD	PTD	B	WD	PTD	4/A-805	4/A-805	2/A-805	25		
	B	3'-0"	6-'8"	1 3/4"	BATHROOM	SWING, SINGLE	3	WD	PTD	B	WD	PTD	4/A-805	4/A-805	3/A-805	25		
	C	3'-0"	6-'8"	1 3/4"	CLOSET	SWING, SINGLE	3	WD	PTD	B	WD	PTD	4/A-805	4/A-805	2/A-805	26		
	C1	1'-6"	6-'8"	1 3/4"	CLOSET	SWING, SINGLE	3	WD	PTD	B	WD	PTD	4/A-805	4/A-805	2/A-805	26		
	C2	2'-6"	6-'8"	1 3/4"	CLOSET	SWING, SINGLE	3	WD	PTD	B	WD	PTD	4/A-805	4/A-805	2/A-805	26		
	C3	3'-0"	8'-9"	0 3/4"	CLOSET	BIFOLD, SINGLE	4	WD	PTD	B	WD	PTD	6/A-805		5/A-805	28		
	C4	4'-0"	8'-9"	0 3/4"	CLOSET	BIFOLD, DOUBLE	5	WD	PTD	B	WD	PTD	6/A-805		5/A-805	29		
	C5	5'-0"	8'-9"	0 3/4"	CLOSET	BIFOLD, DOUBLE	5	WD	PTD	B	WD	PTD	6/A-805		5/A-805	29		
	C6	6'-0"	8'-9"	0 3/4"	CLOSET	BIFOLD, DOUBLE	5	WD	PTD	B	WD	PTD	6/A-805		5/A-805	29		
	C7	6'-0"	6-'8"	1 3/4"	CLOSET	SWING, DOUBLE	7	WD	PTD	B	WD	PTD	4/A-805	4/A-805	2/A-805	27		
	C8	3'-0"	6-'8"	1 3/4"	CLOSET	SWING, SINGLE	6	WD	PTD	B	WD	PTD	4/A-805	4/A-805	2/A-805	26		
	C9	2'-6"	6-'8"	1 3/4"	CLOSET	SWING, SINGLE	6	WD	PTD	B	WD	PTD	4/A-805	4/A-805	2/A-805	26		
	U	3'-0"	6'-8"	1 3/4"	INTERIOR UNIT ENTRY	SWING, SINGLE	2	VINYL	PTD	A	MTL	PTD	8/A-805	8/A-805	7/A-805	23	20 MIN	
	U1	3'-0"	6'-8"	1 3/4"	EXTERIOR UNIT ENTRY	SWING, SINGLE	1	VINYL	PTD	A	MTL	PTD	4/A-807	2/A-807	3/A-807	24		BUILDING B ONLY
	U2	3'-0"	6'-8"	1 3/4"	EXTERIOR UNIT ENTRY	SWING, SINGLE	1	VINYL	PTD	A	MTL	PTD	3/A-806	2/A-806	3/A-807	24		BF UNITS, USE HARDWARE SET #1A
GROUND LEVEL	001	3'-0"	6-'8"	1 3/4"	EXTERIOR ENTRY	SWING, SINGLE	3	MTL	PTD	A	MTL	PTD	5/A-806	5/A-806	4/A-806	4		ELEC. STRIKE
	002	3'-0"	6-'8"	1 3/4"	ELEVATOR LOBBY	SWING, SINGLE	3	MTL	PTD	A	MTL	PTD	9/A-805	9/A-805	4/A-806	4		ELEC. STRIKE
	003	3'-0"	6-'8"	1 3/4"	EXTERIOR ENTRY	SWING, SINGLE	3	MTL	PTD	A	MTL	PTD	5/A-806	5/A-806	4/A-806	4		ELEC. STRIKE
	004	3'-0"	7'-0"	1 3/4"	ELEVATOR LOBBY	SWING, SINGLE	11	HM	PTD	A	HM	PTD	9/A-805	9/A-805	4/A-806	4		
	005	3'-0"	6-'8"	1 3/4"	BOILER ROOM - LOWER	SWING, SINGLE	9	MTL	PTD	A	MTL	PTD	5/A-806	5/A-806	4/A-806	4		
	S1-G	3'-0"	6-'8"	1 3/4"	STAIR #1	SWING, SINGLE	9	MTL	PTD	A	MTL	PTD	9/A-805	9/A-805	1/A-805	11	90 MIN	
	S2-G	3'-0"	6-'8"	1 3/4"	STAIR #2	SWING, SINGLE	9	MTL	PTD	A	MTL	PTD	9/A-805	9/A-805	1/A-805	11	90 MIN	
	S3-G	3'-0"	6-'8"	1 3/4"	STAIR #3	SWING, SINGLE	9	MTL	PTD	A	MTL	PTD	9/A-805	9/A-805	1/A-805	11	90 MIN	
	S4-G	3'-0"	6-'8"	1 3/4"	STAIR #4	SWING, SINGLE	9	MTL	PTD	A	MTL	PTD	9/A-805	9/A-805	1/A-805	11	90 MIN	
	T-G	5'-0"	6-'8"	1 3/4"	TRASH ROOM	SWING, DOUBLE	10	MTL	PTD	A	MTL	PTD	5/A-806	5/A-806	4/A-806	13		
FIRST FLOOR	101	6'-0"	7'-10"	1 3/4"	VESTIBULE	SWING, DOUBLE	12	MTL	PTD		MTL	PTD	4/A-809	3/A-809	5/A-809	1		STOREFRONT, ELEC STRIKE
	102	6'-0"	7'-10"	1 3/4"	VESTIBULE	SWING, DOUBLE	12	MTL	PTD		MTL	PTD	7/A-809	7/A-809	6/A-809	2		STOREFRONT
	103	3'-0"	7'-0"	1 3/4"	RECEPTION	SWING, SINGLE	11	HM	PTD	C	HM	PTD	10/A-805	10/A-805	2/A-805	19		
	104	3'-0"	7'-0"	1 3/4"	OFFICE	SWING, SINGLE	11	HM	PTD	C	HM	PTD	10/A-805	10/A-805	2/A-805	20		
	105	3'-0"	7'-0"	1 3/4"	OFFICE	SWING, SINGLE	11	HM	PTD	C	HM	PTD	10/A-805	10/A-805	2/A-805	20		
	106	3'-0"	6-'8"	1 3/4"	PACKAGE ROOM	SWING, SINGLE	8	MTL	PTD	A	MTL	PTD	10/A-805	10/A-805	2/A-805	16		
	107	3'-0"	6-'8"	1 3/4"	SECURITY	SWING, SINGLE	8	MTL	PTD	A	MTL	PTD	10/A-805	10/A-805	2/A-805	16		
	108	3'-0"	6-'8"	1 3/4"	ELECTRICAL ROOM	SWING, SINGLE	8	MTL	PTD	A	MTL	PTD	10/A-805	10/A-805	1/A-805	12	90 MIN	
	109	3'-0"	6-'8"	1 3/4"	ELECTRICAL ROOM	SWING, SINGLE	8	MTL	PTD	A	MTL	PTD	10/A-805	10/A-805	1/A-805	12	90 MIN	
	110	3'-0"	6-'8"	1 3/4"	EMERGENCY ELECTRIC	SWING, SINGLE	8	MTL	PTD	A	MTL	PTD	10/A-805	10/A-805	1/A-805	14	90 MIN	
	111	3'-0"	7'-0"	1 3/4"	LOUNGE	SWING, SINGLE	12	HM	PTD	C	HM	PTD	10/A-805	10/A-805	2/A-805	9		
	112	3'-0"	7'-0"	1 3/4"	LOUNGE	SWING, SINGLE	12	HM	PTD	C	HM	PTD	10/A-805	10/A-805	2/A-805	10		
	113	3'-0"	6-'8"	1 3/4"	WOMEN'S BATHROOM	SWING, SINGLE	8	MTL	PTD	A	MTL	PTD	10/A-805	10/A-805	3/A-805	21		
	114	3'-0"	6-'8"	1 3/4"	MEN'S BATHROOM	SWING, SINGLE	8	MTL	PTD	A	MTL	PTD	4/A-809	4/A-809	3/A-809	21		
	115	6'-0"	6-'8"	1 3/4"	STORAGE	SWING, DOUBLE	10	MTL	PTD	A	MTL	PTD	10/A-805	10/A-805	2/A-805	17		
	116	3'-0"	7'-0"	1 3/4"	MULTIPURPOSE ROOM	SWING, SINGLE	11	HM	PTD	C	HM	PTD	10/A-805	10/A-805	2/A-805	9		
	117	3'-0"	6-'8"	1 3/4"	COATS	SWING, SINGLE	8	MTL	PTD	A	MTL	PTD	10/A-805	10/A-805	2/A-805	18		
	118	3'-0"	7'-0"	1 3/4"	FITNESS ROOM	SWING, SINGLE	11	HM	PTD	C	HM	PTD	10/A-805	10/A-805	2/A-805	10		
	119	3'-0"	6-'8"	1 3/4"	MAINTENANCE	SWING, SINGLE	8	MTL	PTD	A	MTL	PTD	10/A-805	10/A-805	1/A-805	14		
	120	3'-0"	6-'8"	1 3/4"	BOILER ROOM	SWING, SINGLE	8	MTL	PTD	A	MTL	PTD	10/A-805	10/A-805	1/A-805	14		
	121	3'-0"	6-'8"	1 3/4"	WATER ROOM	SWING, SINGLE	8	MTL	PTD	A	MTL	PTD	10/A-805	10/A-805	1/A-805	14		
	122	2'-6"	6-'8"	1 3/4"	STORAGE	SWING, SINGLE	8	MTL	PTD	A	MTL	PTD	10/A-805	10/A-805	2/A-805	16		
	E1-1	3'-0"	6-'8"	1 3/4"	ELECTRICAL ROOM	SWING, SINGLE	8	MTL	PTD	A	MTL	PTD	10/A-805	10/A-805	1/A-805	14	90 MIN	
	S1-1	3'-0"	6-'8"	1 3/4"	STAIR #1	SWING, SINGLE	9	MTL	PTD	A	MTL	PTD	10/A-805	10/A-805	1/A-805	11	90 MIN	
	S2-1	3'-0"	6-'8"	1 3/4"	STAIR #2	SWING, SINGLE	9	MTL	PTD	A	MTL	PTD	10/A-805	10/A-805	1/A-805	11	90 MIN	
	S3-1	3'-0"	6-'8"	1 3/4"	STAIR #3	SWING, SINGLE	9	MTL	PTD	A	MTL	PTD	10/A-805	10/A-805	1/A-805	11	90 MIN	
	S4-1	3'-0"	6-'8"	1 3/4"	STAIR #4	SWING, SINGLE	9	MTL	PTD	A	MTL	PTD	10/A-805	10/A-805	1/A-805	11	90 MIN	
	T-1	2'-6"	6-'8"	1 3/4"	TRASH ROOM	SWING, SINGLE	8	MTL	PTD	A	MTL	PTD	10/A-805	10/A-805	1/A-805	13	60 MIN	
SECOND FLOOR	201	3'-0"	6-'8"	1 3/4"	ELEV #1 MACHINE ROOM	SWING, SINGLE	8	MTL	PTD	A	MTL	PTD	10/A-805	10/A-805	1/A-805	15	90 MIN	
	202	3'-0"	6-'8"	1 3/4"	STORAGE	SWING, SINGLE	8	MTL	PTD	A	MTL	PTD	10/A-805	10/A-805	2/A-805	16		
	E1-2	3'-0"	6-'8"	1 3/4"	ELECTRICAL ROOM	SWING, SINGLE	8	MTL	PTD	A	MTL	PTD	10/A-805	10/A-805	1/A-805	14	60 MIN	
	E2-2	3'-0"	6'-8"	1 3/4"	ELECTRICAL ROOM	SWING, SINGLE	8	MTL	PTD	A	MTL	PTD	10/A-805	10/A-805	1/A-805	14	60 MIN	
	S1-2	3'-0"	6-'8"	1 3/4"	STAIR #1	SWING, SINGLE	9	MTL	PTD	A	MTL	PTD	10/A-805	10/A-805	1/A-805	11	90 MIN	
	S2-2	3'-0"	6-'8"	1 3/4"	STAIR #2	SWING, SINGLE	9	MTL	PTD	A	MTL	PTD	10/A-805	10/A-805	1/A-805	11	90 MIN	
	S3-2	3'-0"	6-'8"	1 3/4"	STAIR #3	SWING, SINGLE	9	MTL	PTD	A	MTL	PTD	10/A-805	10/A-805	1/A-805	11	90 MIN	
	T-2	2'-6"	6'-8"	1 3/4"	TRASH ROOM	SWING, SINGLE	8	MTL	PTD	A	MTL	PTD	10/A-805	10/A-805	1/A-805	13	60 MIN	
THIRD FLOOR	301	3'-0"	6-'8"	1 3/4"	STORAGE	SWING, SINGLE	8	MTL	PTD	A	MTL	PTD	10/A-805	10/A-805	2/A-805	16		
	302	3'-0"	6-'8"	1 3/4"	STORAGE	SWING, SINGLE	8	MTL	PTD	A	MTL	PTD	10/A-805	10/A-805	2/A-805	16		
	E1-3	3'-0"	6-'8"	1 3/4"	ELECTRICAL ROOM	SWING, SINGLE	8	MTL	PTD	A	MTL	PTD	10/A-805	10/A-805	1/A-805	14	60 MIN	
	E2-3	3'-0"	6-'8"	1 3/4"	ELECTRICAL ROOM	SWING, SINGLE	8	MTL	PTD	A	MTL	PTD	10/A-805	10/A-805	1/A-805	14	60 MIN	
	S1-3	3'-0"	6-'8"	1 3/4"	STAIR #1	SWING, SINGLE	9	MTL	PTD	A	MTL	PTD	10/A-805	10/A-805	1/A-805	11	90 MIN	
	S2-3	3'-0"	6-'8"	1 3/4"	STAIR #2	SWING, SINGLE	9	MTL	PTD	A	MTL	PTD	10/A-805	10/A-805	1/A-805	11	90 MIN	
	S3-3	3'-0"	6-'8"	1 3/4"	STAIR #3	SWING, SINGLE	9	MTL	PTD	A	MTL	PTD	10/A-805	10/A-805	1/A-805	11	90 MIN	
	T-3	2'-6"	6-'8"	1 3/4"	TRASH ROOM	SWING, SINGLE	8	MTL	PTD	A	MTL	PTD	10/A-805	10/A-805	1/A-805	13	60 MIN	
FOURTH FLOOR	401	3'-0"	7'-0"	1 3/4"	ROOF DECK VESTIBULE	SWING, SINGLE	11	HM	PTD	C	HM	PTD	3/A-806	1/A-806	4/A-806	6		
	402	3'-0"	7'-0"	1 3/4"	ROOF DECK VESTIBULE	SWING, SINGLE	11	HM	PTD	C	HM	PTD	10/A-805	10/A-805	2/A-805	5		
	403	3'-0"	6-'8"	1 3/4"	AMENITY SPACE	SWING, SINGLE	11	HM	PTD	C	HM	PTD	10/A-805	10/A-805	2/A-805	9		
	404	3'-0"	7'-0"	1 3/4"	AMENITY SPACE	SWING, SINGLE	11	HM	PTD	C	HM	PTD	10/A-805	10/A-805	2/A-805	9		
	405	3'-0"	7'-0"	1 3/4"	AMENITY SPACE	SWING, SINGLE	11	HM	PTD	A	HM	PTD	10/A-805	10/A-805	2/A-805	9		
	406	3'-0"	7'-0"	1 3/4"	AMENITY SPACE	SWING, SINGLE	11	HM	PTD	A	HM	PTD	10/A-805	10/A-805	2/A-805	9		
	407	3'-0"	6-'8"	1 3/4"	BATHROOM	SWING, SINGLE	8	MTL	PTD	A	MTL	PTD	10/A-805	10/A-805	3/A-805	22		
	408	3'-0"	6-'8"	1 3/4"	ELEV #2 MACHINE ROOM	SWING, SINGLE	8	MTL	PTD	A	MTL	PTD	10/A-805	10/A-805	1/A-805	15	90 MIN	
	409	3'-0"	6-'8"	1 3/4"	BATHROOM	SWING, SINGLE	8	MTL	PTD	A	MTL	PTD	10/A-805	10/A-805	3/A-805	22		
	410	3'-0"	6-'8"	1 3/4"	EXTERIOR COOLING TOWER	SWING, SINGLE	3	MTL	PTD	A	MTL	PTD	3/A-806	1/A-806	4/A-806	8		
	E2-4	3'-0"	6-'8"	1 3/4"	ELECTRICAL ROOM	SWING, SINGLE	8	MTL	PTD	A	MTL	PTD	10/A-805	10/A-805	1/A-805	14	60 MIN	
	S2-4	3'-0"	6-'8"	1 3/4"	STAIR #2	SWING, SINGLE	9	MTL	PTD	A	MTL	PTD	10/A-805	10/A-805	1/A-805	11	90 MIN	
	S3-4	3'-0"	6-'8"	1 3/4"	STAIR #3	SWING, SINGLE	9	MTL	PTD	A	MTL	PTD	10/A-805	10/A-805	1/A-805	11	90 MIN	
	T-4	2'-6"	6-'8"	1 3/4"	TRASH ROOM	SWING, SINGLE	8	MTL	PTD	A	MTL	PTD	10/A-805	10/A-805	1/A-805	13	60 MIN	

Washington Village Phase 1

20 Day Street Building B

Norwalk, CT

Trinity Washington Village Limited Partnership
&
the Norwalk Housing Authority

ICON ARCHITECTURE
101 SUMMER ST BOSTON MA 02110
617-451-3333 www.iconarch.com

CONSULTANT

STAMP

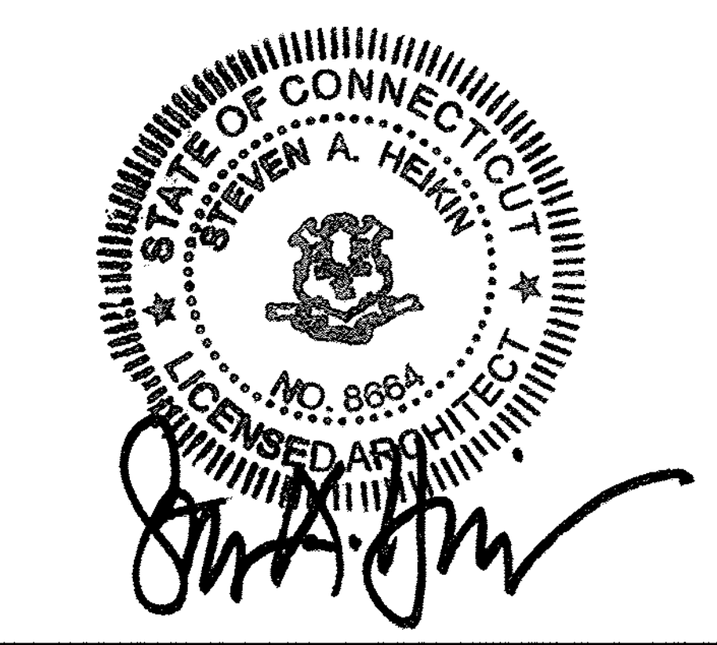

MARK	DATE	DESCRIPTION
	09-15-2014	PERMIT/ PRICING
	06-13-2014	PRICING
	11-18-2013	40% CHFA
	09-19-2013	CAM/ SPECIAL PERMIT

PROJECT NO.: 21222
DRAWN BY: GA, AJ, SO, BD
CHECKED BY:

SHEET TITLE

DOOR SCHEDULE

A-804

9/18/2014 3:30 PM

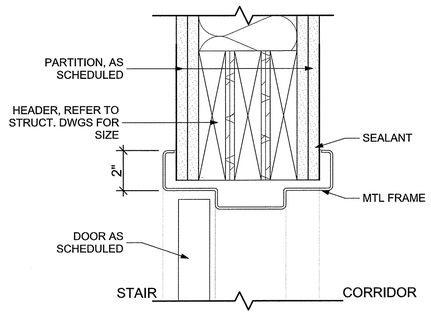

10 STAIR DOOR HEAD/JAMB @ WD
SCALE: 3" = 1'-0"

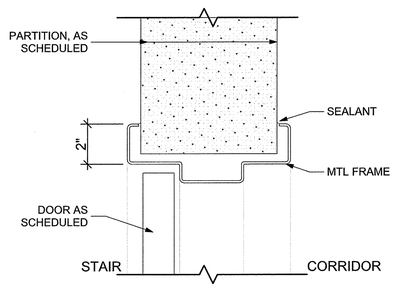

9 STAIR DOOR HEAD/JAMB @ CONCRETE
SCALE: 3" = 1'-0"

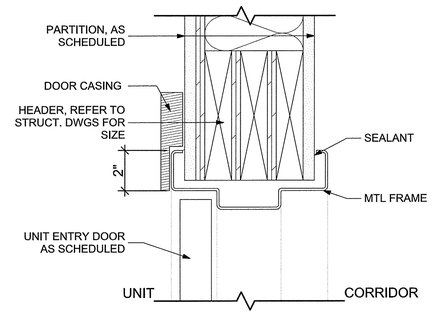

8 TYPICAL INTERIOR UNIT ENTRY HEAD/JAMB
SCALE: 3" = 1'-0"

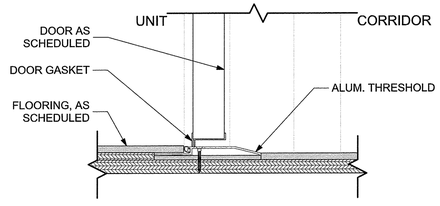

7 TYPICAL INTERIOR UNIT ENTRY THRESHOLD
SCALE: 3" = 1'-0"

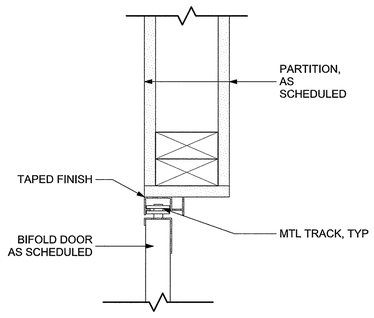

6 INTERIOR BIFOLD DOOR HEAD DETAIL
SCALE: 3" = 1'-0"

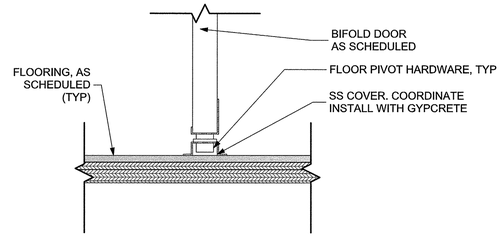

5 INTERIOR BIFOLD DOOR SILL DETAIL
SCALE: 3" = 1'-0"

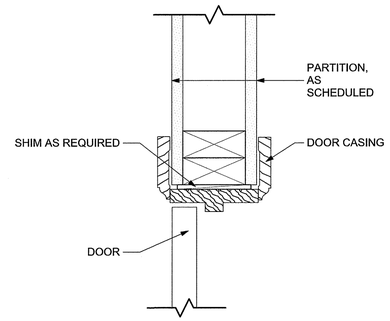

4 TYPICAL INT. DOOR HEAD/JAMB
SCALE: 3" = 1'-0"

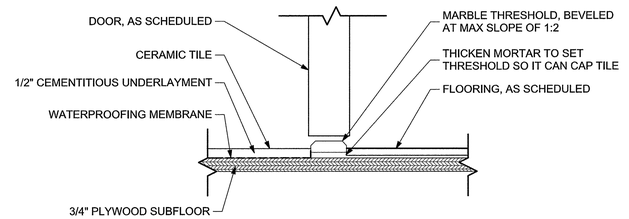

3 BATHROOM THRESHOLD
SCALE: 3" = 1'-0"

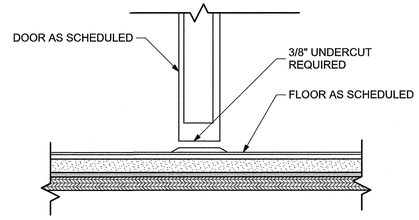

2 TYP. INTERIOR TRANSITION DETAIL
SCALE: 3" = 1'-0"

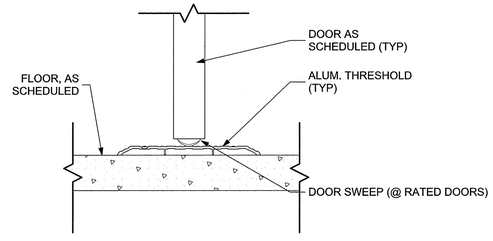

1 TYP. MECH SILL DETAIL
SCALE: 3" = 1'-0"

Washington Village Phase 1

20 Day Street Building B

Norwalk, CT

Trinity Washington Village Limited Partnership
&
the Norwalk Housing Authority

E-ICON ARCHITECTURE
101 SUMMER ST BOSTON MA 02110
617-451-3333 www.iconarch.com

CONSULTANT

STAMP



MARK	DATE	DESCRIPTION
	09-15-2014	PERMIT/ PRICING
	06-13-2014	PRICING
	11-18-2013	40% CHFA
	09-19-2013	CAM/ SPECIAL PERMIT

PROJECT NO.: 21222
DRAWN BY: AF, SO
CHECKED BY:

SHEET TITLE

INTERIOR DOOR DETAILS

A-805

9/18/2014 3:30 PM

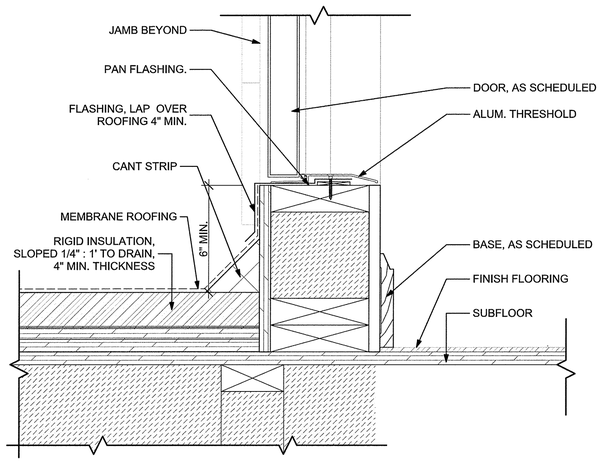

6 TYP. EXT. DOOR SILL @ ROOF ACCESS

SCALE: 3" = 1'-0"

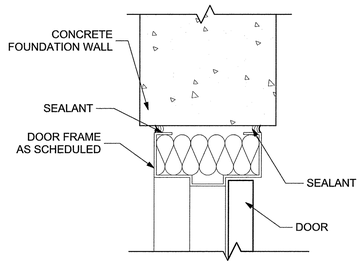

5 TYP. EXT. DOOR HEAD/JAMB @ CONCRETE WALL

SCALE: 3" = 1'-0"

0 3" 6" 9"

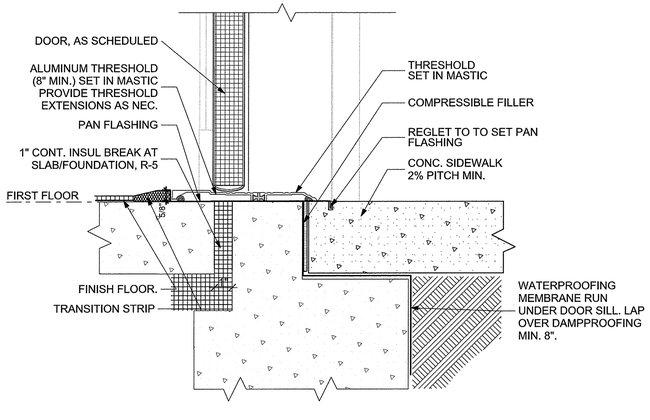

4 TYP. EXT. DOOR SILL @ CONCRETE SLAB

SCALE: 3" = 1'-0"

0 3" 6" 9"

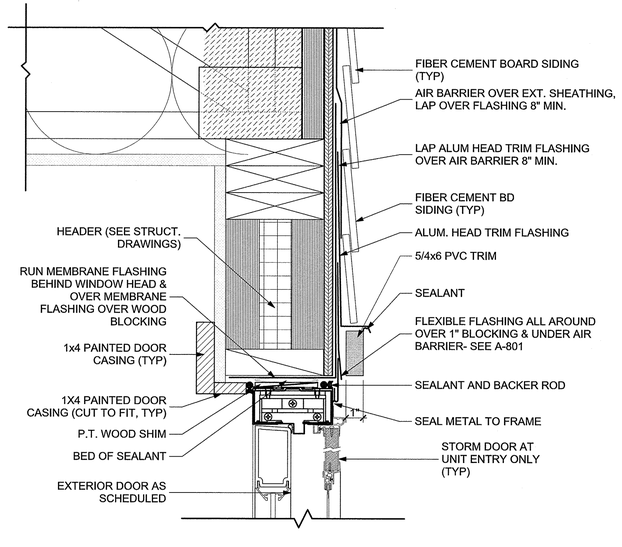

3 TYP. EXT. DOOR HEAD @ SIDING

SCALE: 3" = 1'-0"

0 3" 6" 9"

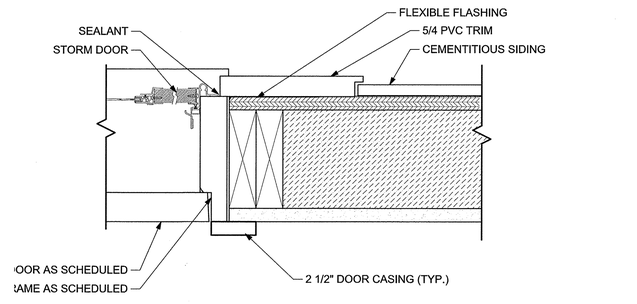

2 TYP. EXT. DOOR W/ STORM DOOR JAMB @ SIDING

SCALE: 3" = 1'-0"

0 3" 6" 9"

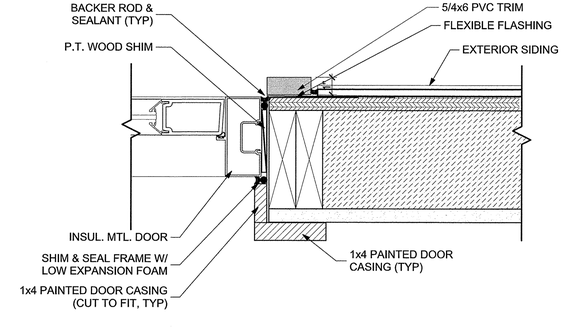

1 TYP. EXT. DOOR JAMB @ SIDING

SCALE: 3" = 1'-0"

Washington Village Phase 1

20 Day Street Building B

Norwalk, CT

Trinity Washington Village Limited Partnership
&
the Norwalk Housing Authority

E-ICON ARCHITECTURE
101 SUMMER ST BOSTON MA 02110
617-451-3333 www.iconarch.com

CONSULTANT

STAMP

STATE OF CONNECTICUT
STEVEN A. HEIN
NO. 9664
REGISTERED ARCHITECT

MARK	DATE	DESCRIPTION
	09-19-2013	CAM/ SPECIAL PERMIT
	11-18-2013	40% CHFA
	06-13-2014	PRICING
	09-15-2014	PERMIT/ PRICING

PROJECT NO.: 21222
DRAWN BY: AF, SO, BD
CHECKED BY:

SHEET TITLE

EXTERIOR DOOR DETAILS

A-806

9/15/2014 3:30 PM

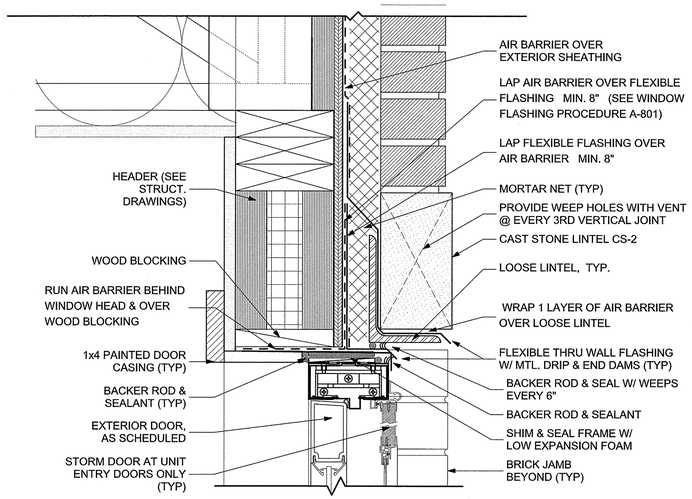

4 TYP. EXT. DOOR HEAD DETAIL @ BRICK
SCALE: 3" = 1'-0"

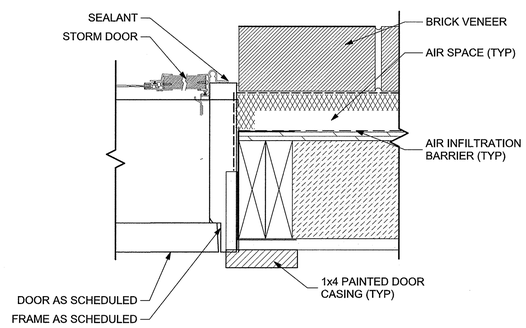

2 TYP. EXT. DOOR W/ STORM DOOR JAMB @ BRICK
SCALE: 3" = 1'-0"

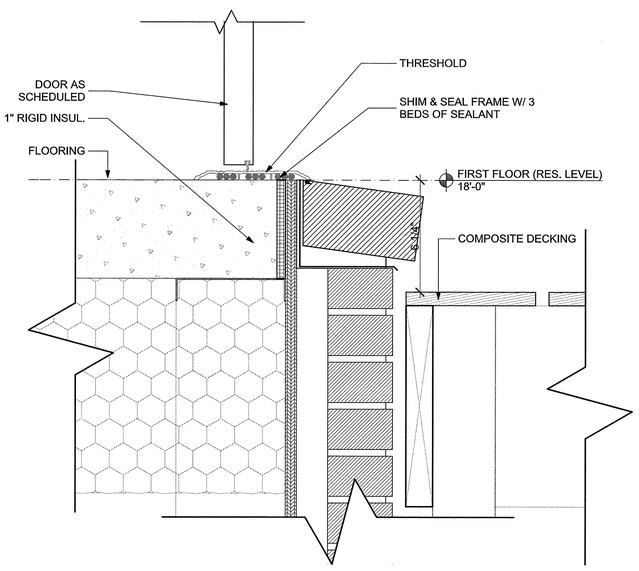

3 TYP. EXT. DOOR SILL @ BRICK & COMPOSITE DECKING
SCALE: 3" = 1'-0"

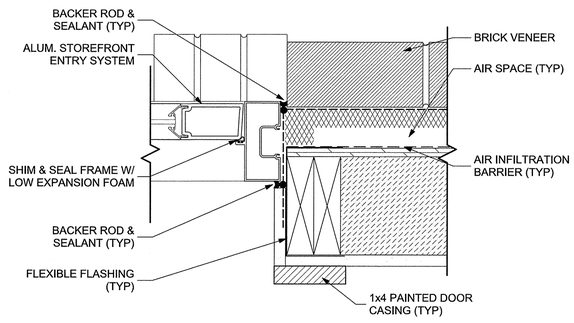

1 TYP. EXT. DOOR JAMB DETAIL @ BRICK
SCALE: 3" = 1'-0"

Washington Village Phase 1

20 Day Street Building B

Norwalk, CT

Trinity Washington Village Limited Partnership
&
the Norwalk Housing Authority

E-ICON ARCHITECTURE
101 SUMMER ST BOSTON MA 02110
617-451-3333 www.iconarch.com

CONSULTANT

STAMP



MARK	DATE	DESCRIPTION
	09-15-2014	PERMIT/ PRICING
	06-13-2014	PRICING
	11-18-2013	40% CHFA
	09-19-2013	CAM/ SPECIAL PERMIT

PROJECT NO.: 21222
DRAWN BY: AF, SO, BD
CHECKED BY:

SHEET TITLE

EXTERIOR DOOR DETAILS AT DUPLEX UNITS

A-807

9/18/2014 3:30 PM

STOREFRONT ELEVATIONS

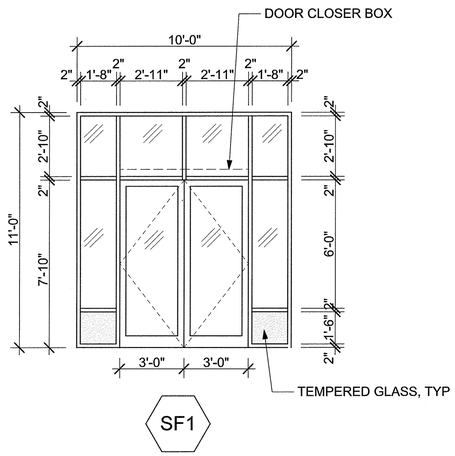

SF1

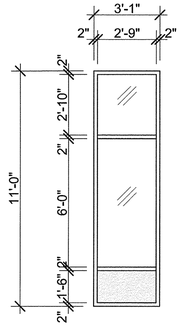

SF1A

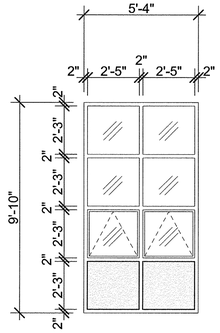

SF2 SF2A

BUILDING B STOREFRONT SCHEDULE

TYPE	SIZE		MATL.	DETAIL			NOTES/REMARKS
	WIDTH	HEIGHT		HEAD	JAMB	SILL	
SF1	10'-0"	11'-0"	ALUM	4A-809	3/A-809	2/A-809	
SF1A	2'-9"	11'-0"	ALUM	4/A-809	3/A-809	2/A-809	
SF2	5'-4"	9'-10"	ALUM	4/A-809	3/A-809	2/A-809	
SF2A	5'-4"	9'-10"	ALUM	9/A-809	9/A-809	8/A-809	

BUILDING B LOUVER AND SCREEN SCHEDULE

TYPE	SIZE		MATL.	DETAIL			NOTES/REMARKS
	WIDTH	HEIGHT		HEAD	JAMB	SILL	
S1	6'-0"	6'-0"	PVC COATED (BLACK)	4/A-707	1/A-707	4/A-707	CORROSIVE-FREE / FLOOD RESISTANT
S2	6'-0"	4'-6"	PVC COATED (BLACK)	4/A-707	1/A-707	4/A-707	CORROSIVE-FREE / FLOOD RESISTANT
S3	6'-0"	4'-0"	PVC COATED (BLACK)	4/A-707 SIM	1/A-707 SIM	3/A-707 SIM	CORROSIVE-FREE / FLOOD RESISTANT
S4	6'-0"	3'-8"	PVC COATED (BLACK)	4/A-707	1/A-707	4/A-707	CORROSIVE-FREE / FLOOD RESISTANT
L1	3'-0"	2'-0"	ALUMINUM	4/A-707 SIM	1/A-707 SIM	3/A-707 SIM	
L2	2'-0"	3'-2"	ALUMINUM	4/A-707 SIM	1/A-707 SIM	3/A-707 SIM	
L3	2'-0"	2'-0"	ALUMINUM	4/A-707 SIM	1/A-707 SIM	3/A-707 SIM	

LOUVER AND SCREEN ELEVATIONS

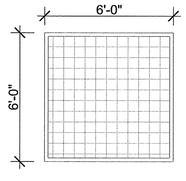

S1

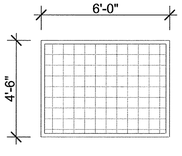

S2

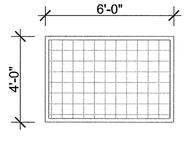

S3

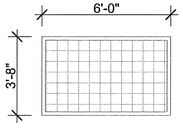

S4

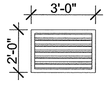

L1

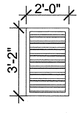

L2



L3

Washington Village Phase 1

20 Day Street Building B

Norwalk, CT

Trinity Washington Village Limited Partnership
&
the Norwalk Housing Authority

E-ICON ARCHITECTURE
101 SUMMER ST BOSTON MA 02110
617-451-3333 www.iconarch.com

CONSULTANT

STAMP

STATE OF CONNECTICUT · STEVEN A. HELLIN · NO. 8664 · LICENSED ARCHITECT

MARK	DATE	DESCRIPTION
	09-15-2014	PERMIT/ PRICING
	06-13-2014	PRICING
	11-18-2013	40% CHFA
	09-19-2013	CAM/ SPECIAL PERMIT

PROJECT NO.: 21222
DRAWN BY: SO, BD
CHECKED BY:

SHEET TITLE

STOREFRONT, SCREEN & LOUVER SCHEDULE

A-808

9/19/2014 2:31 PM

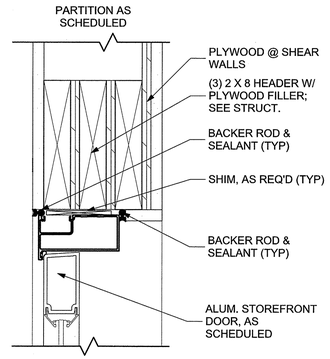

7 INNER ENTRY VESTIBULE DOOR HEAD/JAMB DTL
SCALE: 3" = 1'-0"

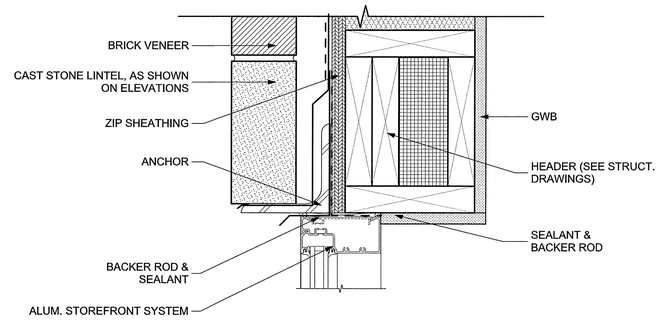

4 HEAD DETAIL @ BRICK
SCALE: 3" = 1'-0"

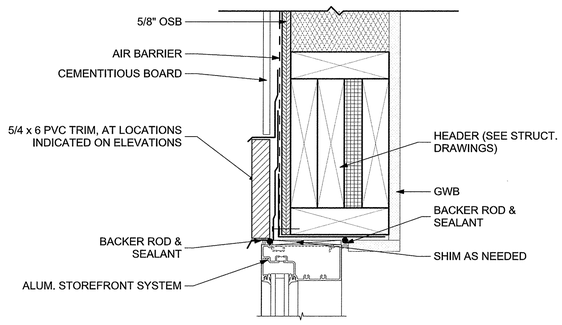

9 EXT. STOREFRONT HEAD/JAMB DTL @ SIDING
SCALE: 3" = 1'-0"

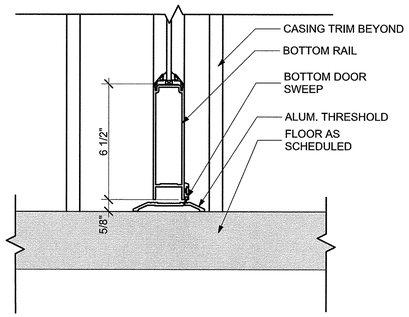

6 INT. STOREFRONT SILL DTL
SCALE: 3" = 1'-0"

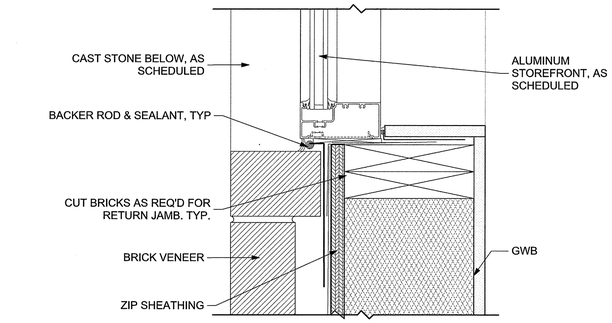

3 JAMB DETAIL @ BRICK
SCALE: 3" = 1'-0"

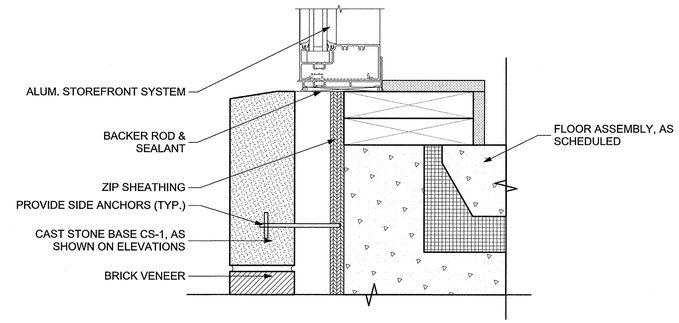

2 SILL DETAIL @ BRICK
SCALE: 3" = 1'-0"

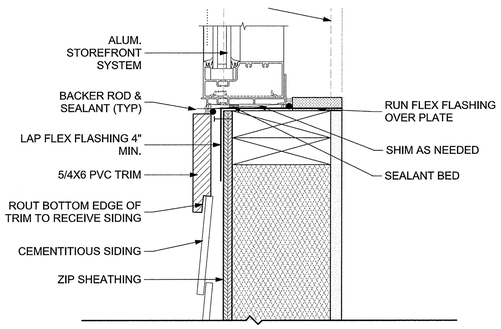

8 EXT. STOREFRONT SILL DETAIL @ SIDING
SCALE: 3" = 1'-0"

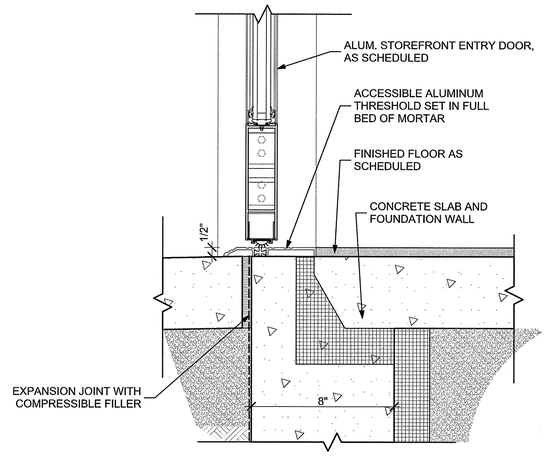

5 SILL DETAIL @ EXT STOREFRONT DOOR
SCALE: 3" = 1'-0"

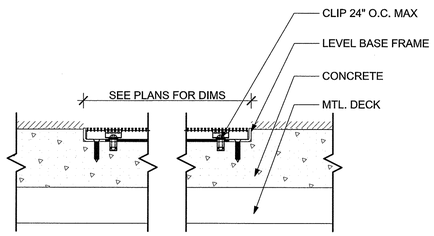

1 WALK OFF MAT DETAIL
SCALE: 3" = 1'-0"

Washington Village Phase 1

20 Day Street Building B

Norwalk, CT

Trinity Washington Village Limited Partnership
&
the Norwalk Housing Authority

E-ICON ARCHITECTURE
101 SUMMER ST BOSTON MA 02110
617-451-3333 www.iconarch.com

CONSULTANT

STAMP

MARK	DATE	DESCRIPTION
	09-15-2014	PERMIT/ PRICING
	06-13-2014	PRICING
	11-18-2013	40% CHFA
	09-19-2013	CAM/ SPECIAL PERMIT

PROJECT NO.: 21222
DRAWN BY: SO, BD
CHECKED BY:

SHEET TITLE

STOREFRONT DETAILS

A-809

9/18/2014 3:30 PM

ROOM FINISH SCHEDULE

	RM #	ROOM NAME	FLOORING											BASE							WALLS			CEILING		NOTES
			WOOD	EPOXY	WALK OFF MAT	CONCRETE	CARPET	VINYL PLANK TILE	SHEET VINYL	RUBBER FLOORING - FITNESS	RUBBER TREADS AND RISERS	PORCELAIN TILE - BATHS	PORCELAIN TILE - COMMON AREAS	EPOXY	PORCELAIN TILE BASE - BATHS	RUBBER BASE - FITNESS	RUBBER BASE - STAIRS	VINYL BASE	WOOD BASE	PORCELAIN TILE BASE - COMMON AREAS	PAINTED GWB	EPOXY	PAINTED CMU	ACOUSTIC CEILING TILE	PAINTED GWB	
TYPICAL UNITS		LIVING ROOM						•										•			•				•	
		DINING						•										•			•				•	
		KITCHEN						•										•			•				•	
		COAT CLOSET						•										•			•				•	
		STORAGE CLOSET						•										•			•				•	
		LINEN CLOSET						•										•			•				•	
		LAUNDRY CLOSET							•									•			•				•	
		HALL						•										•			•				•	
		BEDROOM						•										•			•				•	
		BEDROOM CLOSET						•										•			•				•	
		BATH										•			•						•				•	CT SURROUND
		TOWNHOUSE UNIT STAIRS	•																•		•				•	CLR STAIN ON WD TREADS/ PTD PLYWD RISERS
GROUND FLOOR	G01	GARAGE/PARKING				•																	•	•		
	G02	ENTRY LOBBY-S			•							•			•								•		•	WALK OFF MATS RECESSED INTO FINISH CONCRETE SLAB
	G03	ENTRY LOBBY-N			•							•			•								•		•	WALK OFF MATS RECESSED INTO FINISH CONCRETE SLAB
	TR-G	TRASH/RECYCLE ROOM		•										•								•		•		
FIRST FLOOR	101	ENTRY VESTIBULE			•								•							•	•				•	WALK OFF MATS RECESSED INTO FINISH CONCRETE SLAB
	102	LOBBY											•							•	•				•	
	103	RECEPTION					•											•			•				•	
	103a	OFFICE					•											•			•			•		
	103b	OFFICE					•											•			•			•		
	104	PACKAGE ROOM											•							•	•				•	
	105	FRONT DESK											•							•	•				•	
	106	SECURITY											•							•	•				•	
	107	ELEV LOBBY											•							•	•				•	
	108	MAIN ELECTRIC ROOM							•									•			•			•		
	109	EMERGENCY ELEC							•									•			•			•		
	110	CORRIDOR											•							•	•				•	
	111	RESTROOM- WOMEN										•			•						•				•	
	112	RESTROOM- MEN										•			•						•				•	
	113	STORAGE											•							•	•			•		
	114	STORAGE											•							•	•			•		
	115	MAINTENANCE							•									•			•			•		
	116	BOILER ROOM							•									•			•			•		
	117	WATER ROOM							•									•			•			•		
	118	FITNESS ROOM								•						•					•			•		
	119	MULTIPURPOSE ROOM											•							•	•				•	
	119a	COAT CLOSET											•							•	•			•		
	120	LOUNGE					•											•			•				•	
	C-01	CORRIDOR					•											•			•			•		SEE A-103 AND A-104 FOR CPT-2 LOCATIONS
	TR-1	TRASH/RECYCLE RM							•									•			•			•		
	E1-1	ELEC ROOM							•									•			•			•		
SECOND FLOOR	201	JAN. CLOSET							•									•			•			•		
	C-02	CORRIDOR					•											•			•			•		SEE A-105 AND A-106 FOR CPT-2 LOCATIONS
	TR-2	TRASH/RECYCLE RM							•									•			•			•		
	E2-1	ELEC ROOM							•									•			•			•		
	E2-2	ELEC ROOM							•									•			•			•		
	EM-1	ELEV MACHINE RM							•									•			•			•		
THIRD FLOOR	301	JAN. CLOSET							•									•			•			•		
	302	STORAGE							•									•			•			•		
	C-03	CORRIDOR					•											•			•			•		SEE A-107 AND A-108 FOR CPT-2 LOCATIONS
	TR-3	TRASH/RECYCLE RM							•									•			•			•		
	E3-1	ELEC ROOM							•									•			•			•		
	E3-2	ELEC ROOM							•									•			•			•		
FOURTH FLOOR	401	AMENITY LOUNGE						•										•			•				•	
	402	COMMON RESTROOM-WOMEN										•			•						•				•	
	403	COMMON RESTROOM-MEN										•			•						•				•	
	404	EXTERIOR COOLING TOWER																								ROOFING MEMBRANE - SEE SPECS
	405	ROOF DECK																								CONCRETE PAVERS - SEE SPEC
	C0-4	CORRIDOR					•											•			•			•		SEE A-109 FOR CPT-2 LOCATIONS
	TR-4	TRASH/RECYCLE ROOM							•									•			•			•		
	E4-1	ELEC ROOM							•									•			•			•		
	EM-2	ELEV MACHINE ROOM							•									•			•			•		
COMMON STAIRS	S1-G									•							•					•		•	•	TWO COLORS- TREAD AND RISERS
	S1-1 thru S1-3									•							•				•				•	TWO COLORS- TREAD AND RISERS
	S2-G									•							•					•		•	•	TWO COLORS- TREAD AND RISERS
	S2-1 thru S2-4									•							•				•				•	TWO COLORS- TREAD AND RISERS
	S3-G									•							•							•	•	TWO COLORS- TREAD AND RISERS
	S3-1 thru S3-R									•							•				•				•	TWO COLORS- TREAD AND RISERS
	S4-G									•							•							•	•	TWO COLORS- TREAD AND RISERS
	S4-1									•							•				•				•	TWO COLORS- TREAD AND RISERS

Washington Village
Phase 1

20 Day Street
Building B

Norwalk, CT

Trinity Washington Village Limited Partnership
&
the Norwalk Housing Authority

E-ICON ARCHITECTURE
101 SUMMER ST BOSTON MA 02110
617-451-3333 www.iconarch.com

CONSULTANT

STAMP

STATE OF CONNECTICUT · STEVEN A. HEIMAN · NO. 9884 · LICENSED ARCHITECT

MARK	DATE	DESCRIPTION
	09-15-2014	PERMIT/ PRICING
	06-13-2014	PRICING
	11-18-2013	40% CHFA
	09-19-2013	CAM/ SPECIAL PERMIT

PROJECT NO.: 21222
DRAWN BY: RA, SO, BD
CHECKED BY: KH

SHEET TITLE

FINISH SCHEDULE

A-810

9/19/2013 3:30:31 PM

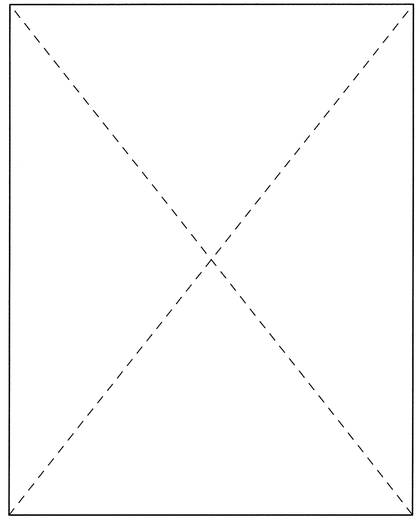

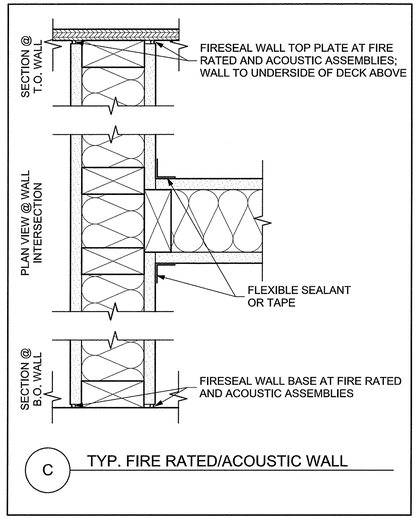

C TYP. FIRE RATED/ACOUSTIC WALL

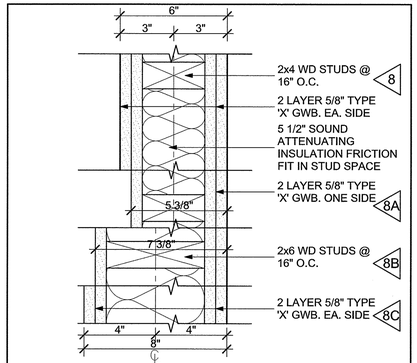

8 2 HR RATED WALL

8A 1 HR RATED WALL

8B 1 HR RATED WALL (2X6)

8C 2 HR RATED WALL (2X6)

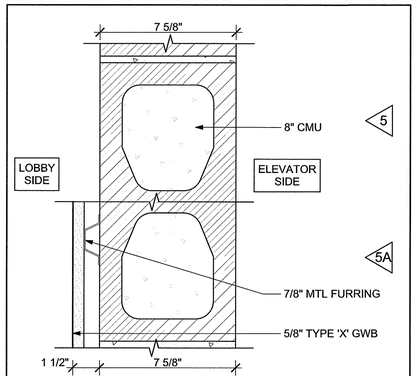

5 2 HR RATED ELEVATOR WALL

5A 2 HR RATED ELEVATOR WALL

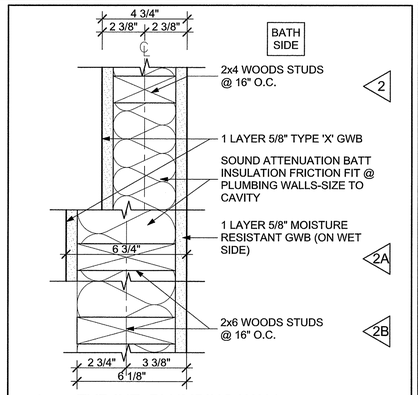

2 TYP INT. PLUMBING WALL
STC 50 TO 54

2A TYP. INT. PLUMBING WALL (2X6)
STC 50 TO 54

2B TYP. INT. PLUMBING WALL (1 SIDE GWB)

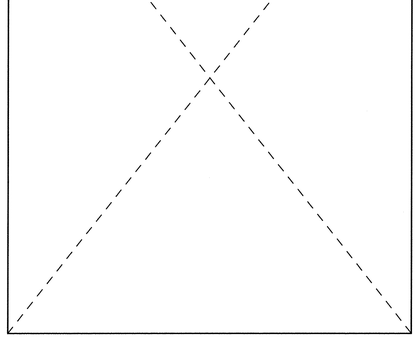

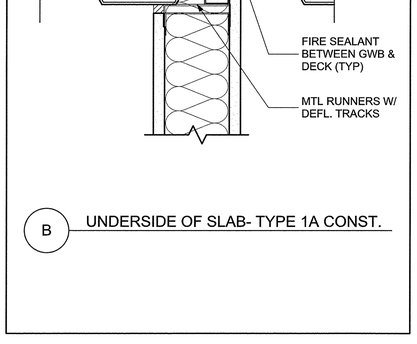

B UNDERSIDE OF SLAB- TYPE 1A CONST.

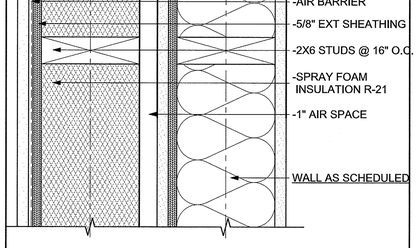

7 ACOUSTIC WALL ASSEMBLY

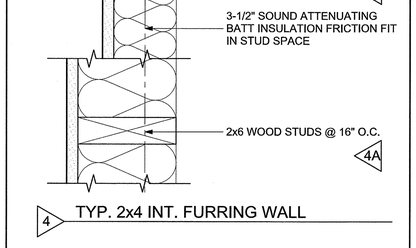

4 TYP. 2x4 INT. FURRING WALL

4A TYP. 2x6 INT. FURRING WALL

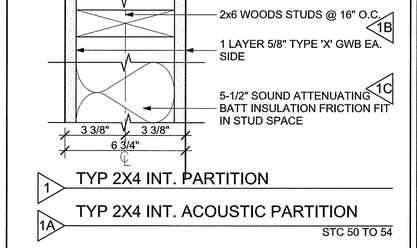

1 TYP 2X4 INT. PARTITION

1A TYP 2X4 INT. ACOUSTIC PARTITION
STC 50 TO 54

1B TYP 2X6 INT. PARTITION

1C TYP 2X6 INT. ACOUSTIC PARTITION

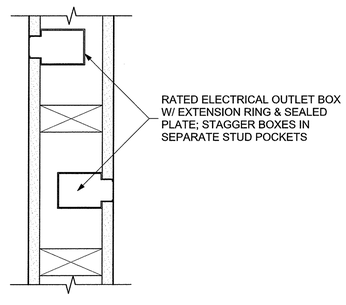

D TYPICAL FIRE RATED/ACOUSTIC WALL ELECTRICAL OUTLET BOXES

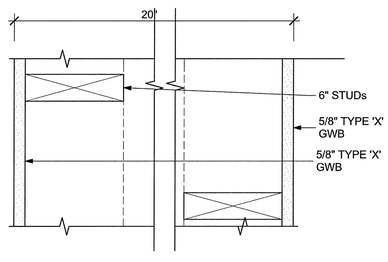

9 PLUMBING CHASE @ BACK-TO-BACK WALL HUNG FIXTURES

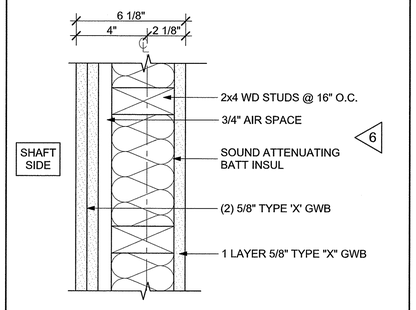

6 2 HR SHAFT WALL
STC 50 TO 54

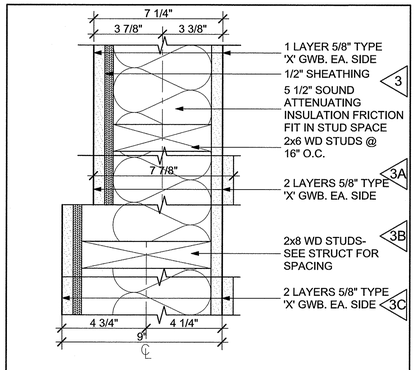

3 1 HR RATED UNIT SEPARATION/STAIR
STC 50 TO 55

3A 2 HR RATED UNIT SEPARATION/STAIR
STC 50 TO 55

3B 1 HR RATED UNIT SEPARATION/STAIR
STC 50 TO 55

3C 2 HR RATED UNIT SEPARATION/STAIR
STC 50 TO 55

GENERAL NOTES:

1. PROVIDE MOISTURE-RESISTANT GWB @ BATH WALLS & BATH CEILINGS; PLUMBING WALLS IN KITCHENS, LAUNDY; MECHANICAL & EQUIPMENT ROOMS & PLUMBING CHASE WALLS.

2. GAUGE OF INTERIOR METAL STUDS TO BE DETERMINED IN ACCORDANCE W/ SPECIFICATION SECTION 09260 GYPSUM BOARD ASSEMBLIES. WHERE HEIGHT OF WALL EXCEEDS 15'-0" PROVIDE 12 GA STUDS AT 12" O.C.; UNLESS OTHERWISE NOTED.

3. PROVIDE NON-HARDENING ACOUSTIC SEALANT AROUND PERIMETER OF CEILING AND FLOOR OF ALL ROOMS AND AT DOOR FRAME PENETRATIONS. ALL PIPE, DUCT, AND EQUIPMENT PENETRATIONS SHOULD BE KEPT TO A MINIMUM AND SHOULD BE AT LEAST 3/8" WIDER THAN THE CIRCUMFERENCE / DEPTH OF THE PENETRATING ELEMENT TO ENSURE THAT THERE IS NO RIGID CONTACT. FILL ALL PENETRATIONS WITH NON-HARDENING ACOUSTIC SEALANT.

4. ALL TOILET ROOM AND BATHROOM STUD WALLS TO EXTEND TO UNDERSIDE OF FLOOR ABOVE. CONTINUE GWB OUTSIDE OF STUD WALL TO FLOOR ABOVE, FILL STUD CAVITY WITH ACOUSTIC INSULATION FOR FULL HEIGHT.

5. REFER TO UL ASSEMBLY NUMBER FOR COMPLETE ASSEMBLY NOTES AND METHODS.

Washington Village Phase 1

20 Day Street Building B

Norwalk, CT

Trinity Washington Village Limited Partnership
&
the Norwalk Housing Authority

E-ICON ARCHITECTURE
101 SUMMER ST BOSTON MA 02110
617-451-3333 www.iconarch.com

CONSULTANT

STAMP

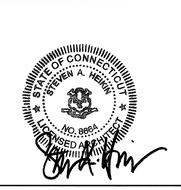

MARK	DATE	DESCRIPTION
	09-15-2014	PERMIT/ PRICING
	06-13-2014	PRICING
	11-18-2013	40% CHFA
	09-19-2013	CAM/ SPECIAL PERMIT

PROJECT NO.: 21222
DRAWN BY: AF / KH / DW / SO
CHECKED BY:

SHEET TITLE

PARTITION TYPES

A-811

6/18/2014 3:36 PM

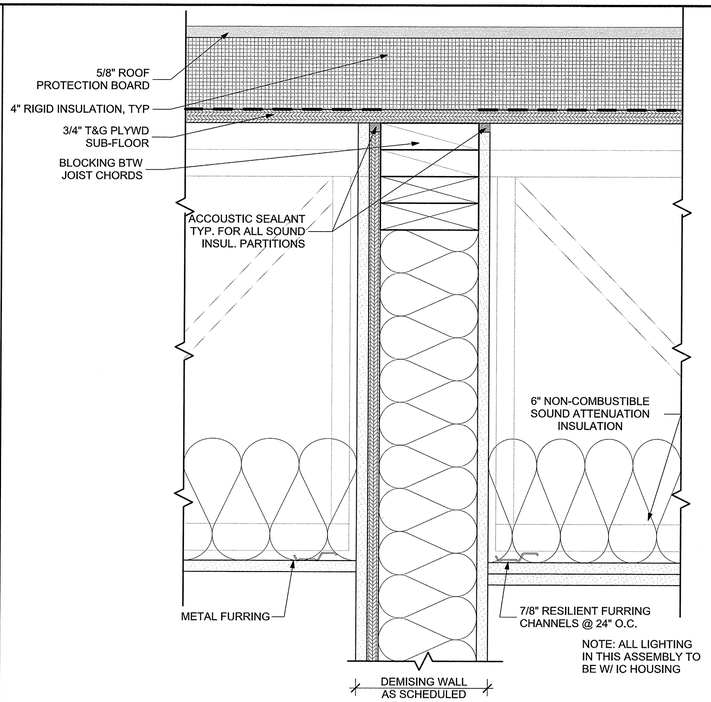

K TYP. DEMISING WALL/ROOF ASSEMBLY

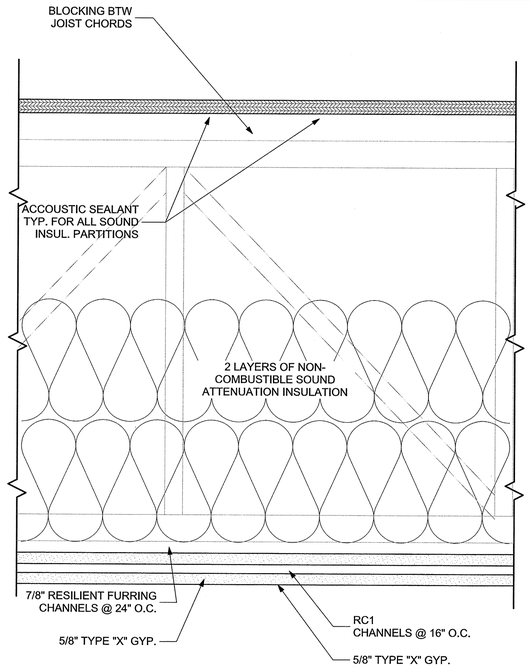

J TYP. SOUND ISOLATION CEILING ASSEMBLY
NOTE: ALL LIGHTING IN THIS ASSEMBLY TO BE W/ IC HOUSING

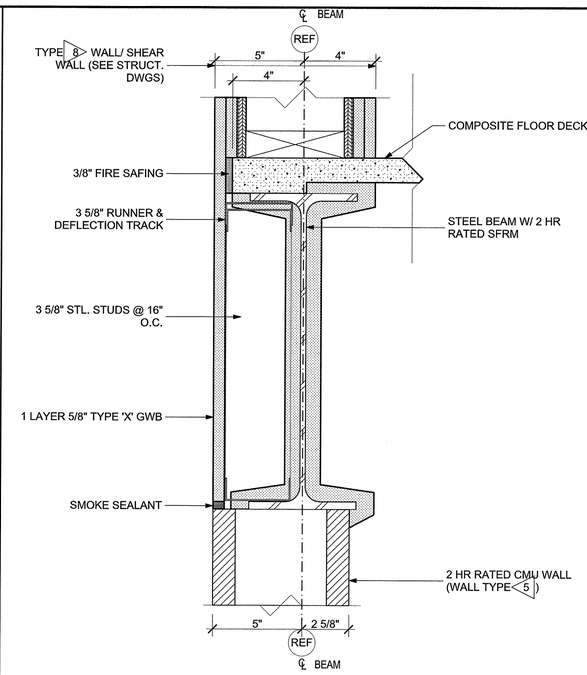

I CMU TO WOOD STAIR WALL TRANSITION
AT TYPE 1A CONSTRUCTION TO TYPE 5A CONSTRUCTION

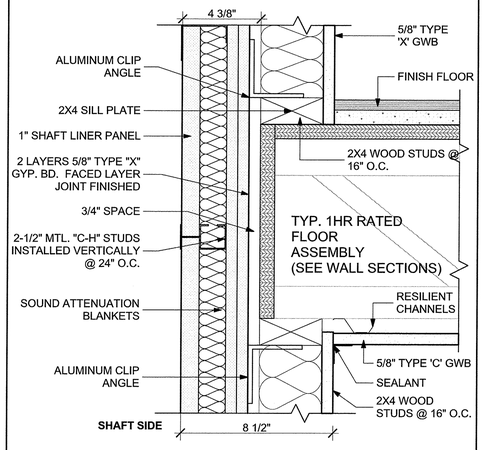

H 2 HR SHAFTWALL
UL #U366
AT TYPE 5A CONSTRUCTION

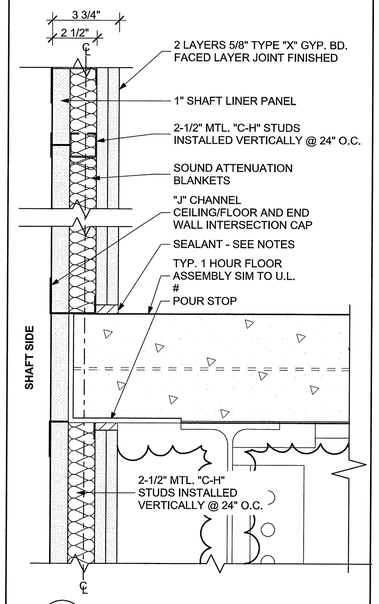

G TYPICAL 2HR SHAFT WALL
2-HR FIRE RATING
UL U415
AT TYPES 1A

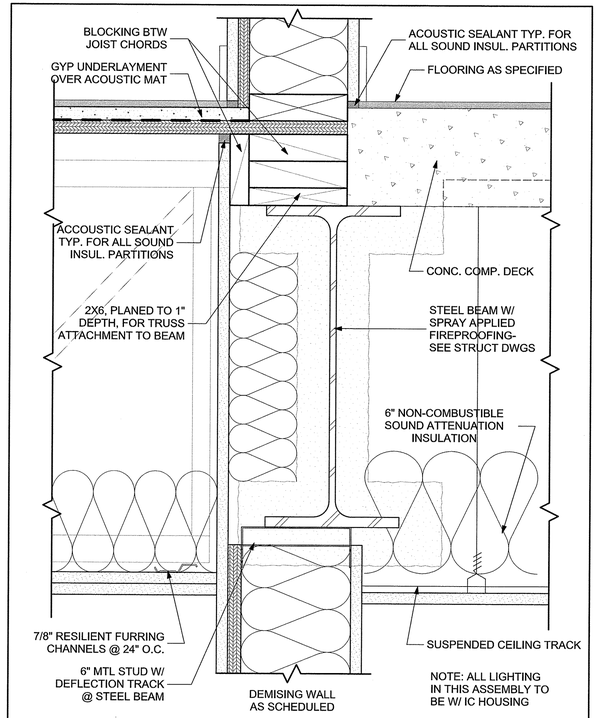

F FLOOR @ WOOD/STEEL INTERSECTION

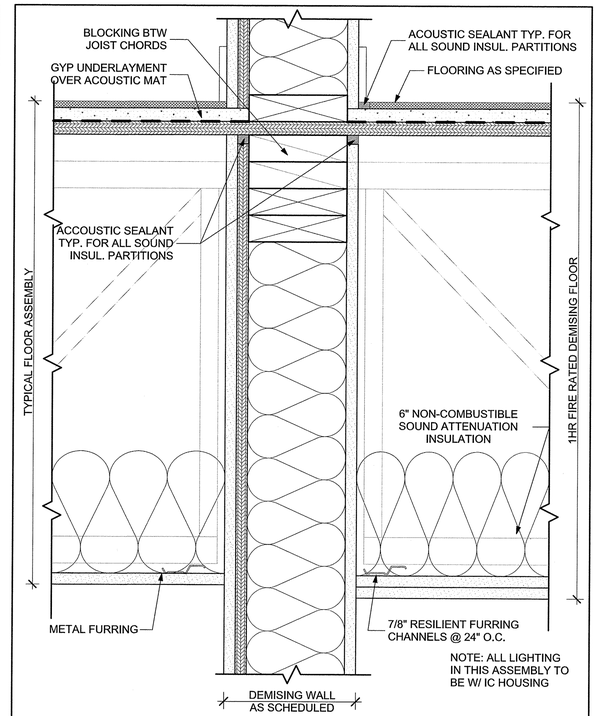

E TYP. DEMISING WALL/FLOOR ASSEMBLY

Washington Village Phase 1

20 Day Street Building B

Norwalk, CT

Trinity Washington Village Limited Partnership
&
the Norwalk Housing Authority

E-ICON ARCHITECTURE
101 SUMMER ST BOSTON MA 02110
617-451-3333 www.iconarch.com

CONSULTANT

STAMP

STATE OF CONNECTICUT · STEVEN A. HEIKEN · NO. 9864 · REGISTERED ARCHITECT

MARK	DATE	DESCRIPTION
	09-15-2014	PERMIT/ PRICING
	06-13-2014	PRICING
	11-18-2013	40% CHFA
	09-19-2013	CAM/ SPECIAL PERMIT

PROJECT NO.: 21222
DRAWN BY: SO
CHECKED BY:

SHEET TITLE

PARTITION DETAILS

A-812

9/19/2014 3:30 PM

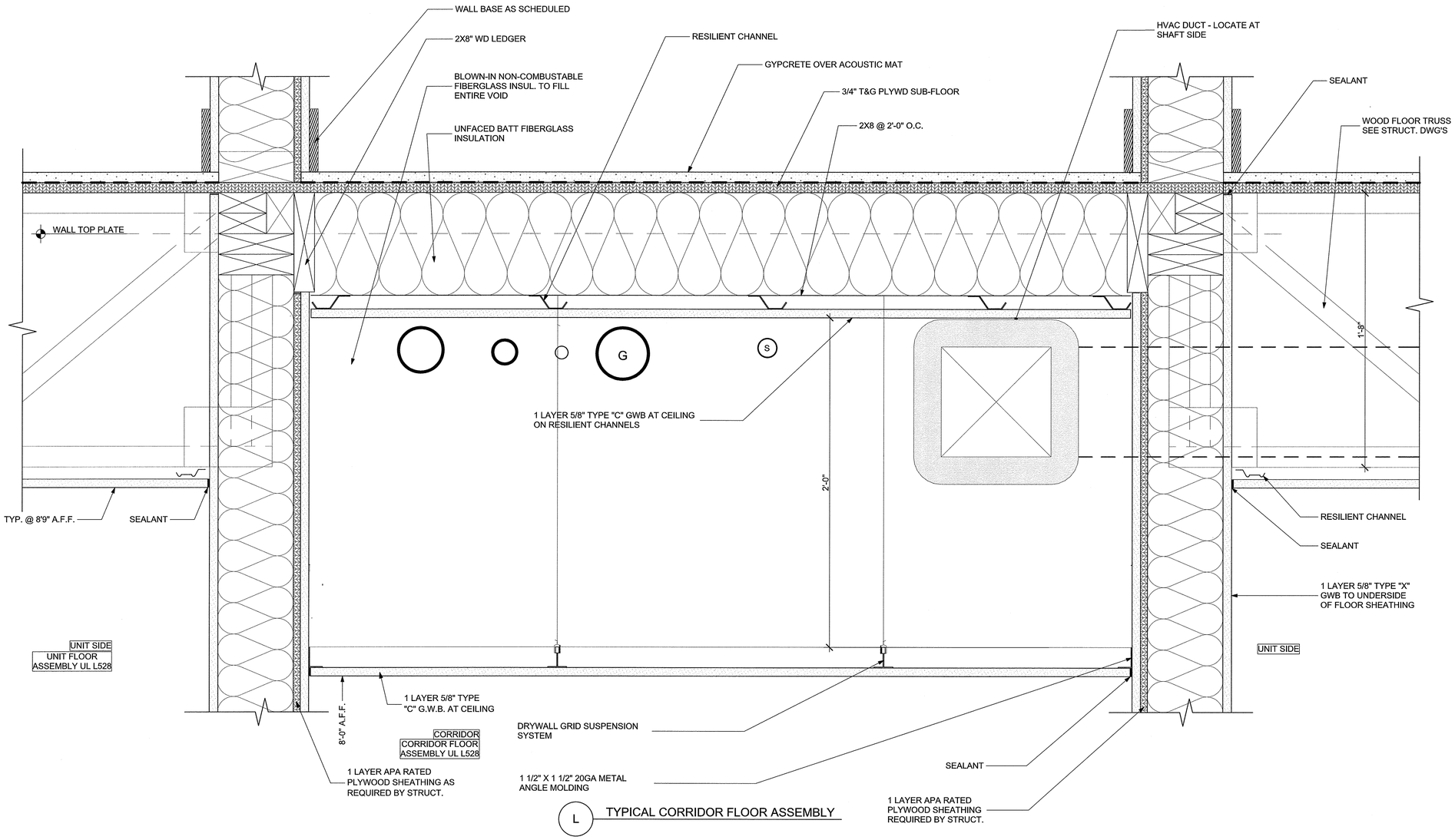

L TYPICAL CORRIDOR FLOOR ASSEMBLY

Washington Village Phase 1

20 Day Street Building B

Norwalk, CT

Trinity Washington Village Limited Partnership
&
the Norwalk Housing Authority

E-ICON ARCHITECTURE
101 SUMMER ST BOSTON MA 02110
617-451-3333 www.iconarch.com

CONSULTANT

STAMP

STATE OF CONNECTICUT
STEVEN A. HEINY
NO. 8864
LICENSED ARCHITECT

MARK	DATE	DESCRIPTION
	09-15-2014	PERMIT/ PRICING
	06-13-2014	PRICING
	11-18-2013	40% CHFA
	09-19-2013	CAM/ SPECIAL PERMIT

PROJECT NO.: 21222
DRAWN BY: SO
CHECKED BY:

SHEET TITLE

PARTITION DETAILS

A-813

9/19/2014 3:31 PM

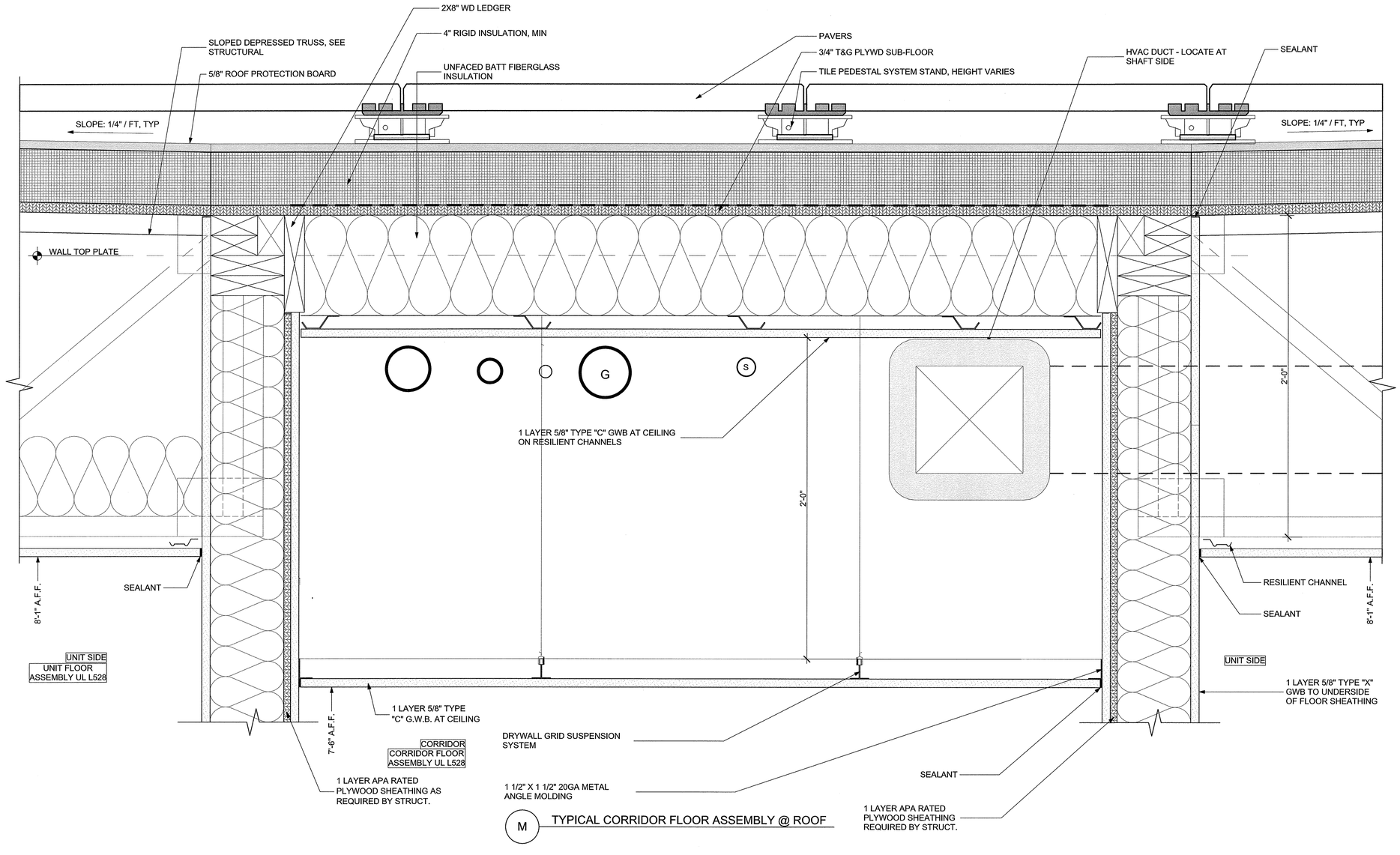

M TYPICAL CORRIDOR FLOOR ASSEMBLY @ ROOF

Washington Village Phase 1

20 Day Street Building B

Norwalk, CT

Trinity Washington Village Limited Partnership
&
the Norwalk Housing Authority

E-ICON ARCHITECTURE
101 SUMMER ST BOSTON MA 02110
617-451-3333 www.iconarch.com

CONSULTANT

STAMP

STATE OF CONNECTICUT · STEVEN A. HEIMAN · NO. 8864 · REGISTERED ARCHITECT

MARK	DATE	DESCRIPTION
	09-15-2014	PERMIT/ PRICING
	06-13-2014	PRICING
	11-18-2013	40% CHFA
	09-19-2013	CAM/ SPECIAL PERMIT

PROJECT NO.: 21222
DRAWN BY: SO
CHECKED BY:

SHEET TITLE

PARTITION DETAILS

A-814

9/19/2014 9:30 PM

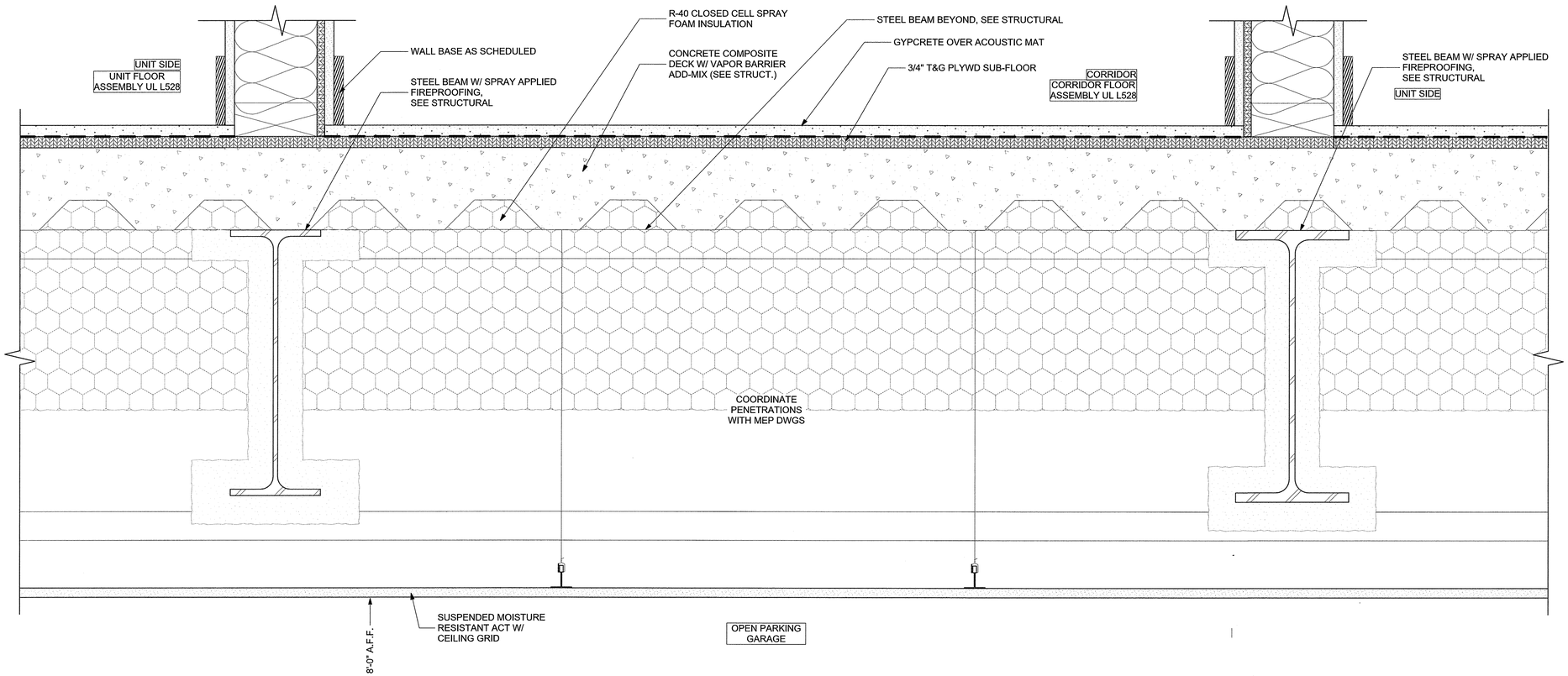

N TYPICAL CORRIDOR FLOOR ASSEMBLY @ PARKING GARAGE

Washington Village Phase 1

20 Day Street Building B

Norwalk, CT

Trinity Washington Village Limited Partnership
&
the Norwalk Housing Authority

E-ICON ARCHITECTURE
101 SUMMER ST BOSTON MA 02110
617-451-3333 www.iconarch.com

CONSULTANT

STAMP

STATE OF CONNECTICUT
STEVEN A. HEIDE
NO. 8664
REGISTERED ARCHITECT

MARK	DATE	DESCRIPTION
	09-19-2013	CAM/ SPECIAL PERMIT
	11-18-2013	40% CHFA
	06-13-2014	PRICING
	09-15-2014	PERMIT/ PRICING

PROJECT NO.: 21222
DRAWN BY: SO
CHECKED BY:

SHEET TITLE

PARTITION DETAILS

A-815

9/15/2014 3:30 PM

STANDARD STRUCTURAL ABBREVIATIONS

AFF	ABOVE FINISH FLOOR
ALT	ALTERNATE
ALUM	ALUMINUM
ANCH	ANCHOR
APPR	APPROVED
APPROX	APPROXIMATE
ARCH	ARCHITECT / ARCHITECTURAL
ASPH	ASPHALT
@	AT (SPACING)
AVG	AVERAGE
BSMT	BASEMENT
BM	BEAM
BRG	BEARING
BTWN	BETWEEN
BLK	BLOCKING
BOTT	BOTTOM
BOF	BOTTOM OF FOOTING
BIT	BITUMINOUS
BLDG	BUILDING
CAP	CAPACITY
CIP	CAST IN PLACE
CLG	CEILING
CEM	CEMENT
CTR	CENTER
℄	CENTER LINE
C TO C	CENTER TO CENTER
CLR	CLEAR
CHAM	CHAMFER
CTRD	CENTERED
COL	COLUMN
CONC	CONCRETE
CMU	CONCRETE MASONRY UNIT
CONN	CONNECTION
CONST	CONSTRUCTION
CONST JT	CONSTRUCTION JOINT
CJ	CONTROL JOINT
CONTR	CONTRACTOR
CONT	CONTINUOUS
COV	COVER
CF	CUBIC FOOT, FEET
CY	CUBIC YARD(S)
DAB	DEFORMED ANCH BAR
DL	DEAD LOAD
DEFL	DEFLECTION
DEG	DEGREE
DTL	DETAIL
DEPR	DEPRESSION
DIAG	DIAGONAL
DIA	DIAMETER
DIM	DIMENSION
DO	DITTO
DWL	DOWEL
DN	DOWN
DWG	DRAWING
EA	EACH
EF	EACH FACE
EW	EACH WAY
EL	ELEVATION
EOS	EDGE OF SLAB
ELEV	ELEVATOR
EXIST	EXISTING
EJ	EXPANSION JOINT
EXT	EXTERIOR
F.D.	FLOOR DRAIN
FF	FAR FACE
FT	FEET, FOOT
FP	FIREPROOFING
FIN	FINISH
F.F.	FINISH FLOOR
FTG	FOOTING
FND	FOUNDATION
FRMG	FRAMING
GA	GAGE
GALV	GALVANIZED
GC	GENERAL CONTRACTOR
GLU LAM	GLUE LAMINATED
GR	GRADE
GR BM	GRADE BEAM
GYP	GYPSUM
HAS	HEADED ANCHOR STUD
HK	HOOK
HORIZ	HORIZONTAL
HSS	HOLLOW STRUCTURAL SECTION
IN	INCH
INCL	INCLUDE
ID	INSIDE DIAMETER
INT	INTERIOR
IF	INSIDE FACE
INV.	INVERT
JT	JOINT
KD	KILN DRIED
LT WT	LIGHT WEIGHT
LL	LIVE LOAD
LF	LINEAR FEET
LSL	LAMINATED STRAND LUMBER
LLH	LONG LEG HORIZONTAL
LLV	LONG LEG VERTICAL
LVL	LAMINATED VENEER LUMBER
MANUF	MANUFACTURER
MAS	MASONRY
MATL	MATERIAL
MAX	MAXIMUM
MECH	MECHANICAL
MTL	METAL
MIN	MINIMUM
MISC.	MISCELLANEOUS
MTD	MOUNTED
NF	NEAR FACE
NORM WT	NORMAL WEIGHT
NIC	NOT IN CONTRACT
NO. OR #	NUMBER
NTS	NOT TO SCALE
OC	ON CENTER
OPNG	OPENING
OPP	OPPOSITE
OF	OUTSIDE FACE
O.D.	OUTSIDE DIAMETER
OSB	ORIENTED STRAND BOARD
PERP	PERPENDICULAR
PLF	POUNDS PER LINEAR FOOT
PLYWD	PLYWOOD
PEN	PENETRATION
PCS	PIECES
ℙ OR PL	PLATE
PMF	REMOLDED FILLER
PROJ	PROJECTION
PT	PRESSURE TREATED
LB	POUND
PSF	POUNDS PER SQUARE FOOT
PSI	POUNDS PER SQUARE INCH
PCF	POUNDS PER CUBIC FOOT
PAF	POWER ACTUATED FASTENER
P/C	PRECAST
PDF	POWER DRIVEN FASTENER
PREFAB	PREFABRICATED
PSL	PARALLEL STRAND LUMBER
P/S	PRESTRESSED
P/T	POST TENSIONED
PL	PROPERTY LINE
QTY	QUANTITY
R	RADIUS
REBAR	REINFORCING BAR
REINF	REINFORCING
REQD	REQUIRED
SECT	SECTION
SPEC	SPECIFICATION
SLV	SHORT LEG VERTICAL
SOG	SLAB ON GRADE
SQ	SQUARE
SIM	SIMILAR
SF	SQUARE FOOT, FEET
STL	STEEL
STD	STANDARD
STIFF	STIFFENER
STIRR	STIRRUP
STRUC	STRUCTURAL
SYMM	SYMMETRICAL
T&B	TOP AND BOTTOM
TEMP	TEMPORARY
T&G	TONGUE AND GROOVE
THK	THICK, THICKNESS
TOC	TOP OF CONCRETE
TOL	TOP OF LEDGE
TOF	TOP OF FOOTING
TOS	TOP OF STEEL
TOW	TOP OF WALL
THRU	THROUGH
TOPG	TOPPING
TYP	TYPICAL
TS	TUBE STEEL
UNO	UNLESS NOTED OTHERWISE
VERT	VERTICAL
WPRF	WATERPROOF
WD	WOOD
WP	WORKING POINT
WT	WEIGHT
W/	WITH
WWF	WELDED WIRE FABRIC
W/O	WITHOUT
YD	YARD

GENERAL STRUCTURAL NOTES

GENERAL

1. 2005 STATE OF CONNECTICUT STATE BUILDING CODE AND SUPPLEMENT.
2. THE CONTRACTOR SHALL PROVIDE ALL NECESSARY SHORING AND BRACING TO MAINTAIN THE STABILITY, SAFETY, AND LATERAL LOAD RESISTANCE OF THE BUILDING AND ITS INDIVIDUAL COMPONENTS THROUGHOUT CONSTRUCTION.
3. DIMENSIONS AND DETAILS SHALL BE CHECKED AGAINST ARCHITECTURAL DRAWINGS.
4. THE CONTRACTOR SHALL VERIFY AND COORDINATE THE SIZE AND LOCATION OF ALL OPENINGS, SLEEVES AND ANCHOR BOLTS AS REQUIRED BY ALL TRADES. OPENINGS NOT SPECIFICALLY SHOWN SHALL BE APPROVED BY THE ARCHITECT AND ENGINEER.
5. FOR RENOVATIONS AND ADDITIONS, THE CONTRACTOR SHALL VERIFY ALL DIMENSIONS AND EXISTING CONDITIONS AND NOTIFY THE STRUCTURAL ENGINEER OF ANY DISCREPANCIES PRIOR TO PERFORMING WORK.
6. DIMENSIONS SHOWN ON THE STRUCTURAL DRAWINGS ARE GENERALLY OBTAINED FROM THE ARCHITECT AND ARE INCLUDED AS INFORMATION COMPLEMENTARY TO THE ARCHITECTURAL DRAWINGS. LAYOUT OF BUILDING FOUNDATIONS OR OTHER ITEMS MAY BY MADE USING THE DIMENSIONS SHOWN ON THE STRUCTURAL DRAWINGS ONLY IF THE CONTRACTOR HAS COMPARED THESE DRAWINGS WITH THE ARCHITECTURAL DRAWING AND HAS RECEIVED CLARIFICATION, FROM THE ARCHITECT, REGARDING ANY ERRORS, INCONSISTENCIES, OR OMMISIONS.
7. DO NOT SCALE DRAWINGS TO OBTAIN INFORMATION.
8. SEE ARCHITECTURAL DRAWINGS AND SPECIFICATIONS FOR WATER/DAMP-PROOFING AND FIREPROOFING REQUIREMENTS.

BUILDING DESIGN LOADS

DESIGN LIVE LOADS

ASSEMBLY, STAIRS CORRIDORS AND LOBBIES:	100PSF
OFFICES:	50PSF
CLASS ROOMS:	40PSF

SNOW LOADS

GROUND SNOW LOAD:	Pg = 30
IMPORTANCE FACTOR:	Is = 1.0
FLAT ROOF SNOW LOAD:	Pf = 30PSF
SNOW EXPOSURE FACTOR:	Ce = 1.0
THERMAL FACTOR:	Cr = 1.0

WIND LOADS

BASIC WIND SPEED (3 SEC GUST):	110 MPH
WIND EXPOSURE CATEGORY:	B
WIND IMPORTANCE FACTOR:	Iw= 1.15
WIND PRESSURE:	XX

SEISMIC LOADS

SPECTRAL RESPONSE ACCELERATION AT SHORT PERIODS:	Ss=0.308
SPECTRAL RESPONSE ACCELERATION AT ONE-SECOND PERIODS:	S1=0.086
SEISMIC USE GROUP:	II
SEISMIC DESIGN CATEGORY:	B
SITE CLASS:	D
ANALYSIS PROCEDURE: EQUIVALENT LATERAL FORCE METHOD	

LATERAL LOAD RESISTING SYSTEMS:

STRUCTURAL STEEL SYSTEM NOT SPECIFICALLY DETAILED FOR SEISMIC RESISTANCE AND ORDINARY REINFORCED MASONRY SHEAR WALLS
R=3.0
Cd=3

ORDINARY REINFORCED MASONRY SHEAR WALLS
R=3.0
Cd=2.25

FOUNDATIONS

1. ALL FOOTINGS SHALL BEAR ON UNDISTURBED NATURAL MATERIAL OR CONTROLLED STRUCTURAL FILL HAVING AN ALLOWABLE BEARING VALUE OF 2 TONS PER SQUARE FOOT TOTAL LOAD PRESSURE AND SHALL BEAR LEAST 3'-6" BELOW FINISH GRADE WHERE EXPOSED TO FREEZING.
2. ELEVATIONS OF THE BOTTOM OF FOOTING SHOWN ON PLANS ARE FOR BIDDING PURPOSES AND SHALL BE LOWERED IF NECESSARY TO THE REQUIRED BEARING MATERIAL AS FOUND UPON EXCAVATION. IF THE REQUIRED BEARING MATERIAL IS NOT ENCOUNTERED AT ELEVATIONS SHOWN, NOTIFY ENGINEER IMMEDIATELY.
3. FOR SLAB ON GRADE AREAS WITHIN BUILDING PERIMETER, REMOVE ALL SURFACE TOPSOIL, PAVEMENT, AND OTHER UNSUITABLE MATERIALS. EXISTING GRANULAR MATERIAL MAY BE LEFT IN PLACE PROVIDED IT IS RECOMPACTED WITH A MINIMUM OF SIX PASSES OF 10 TON VIBRATORY ROLLER. ANY REMAINING FILL REQUIRED TO UNDERSIDE OF SLAB SHALL BE COMPACTED STRUCTURAL FILL.
4. FOUNDATION WALLS SHALL BE TEMPORARILY BRACED UNTIL FRAMED SLABS AND SLAB ON GRADE BRACING THESE WALLS LATERALLY AGAINST EARTH PRESSURE, WIND AND OTHER LATERAL FORCES ARE IN PLACE.
5. STEP FOOTINGS AS REQUIRED TO PASS UNDER MECHANICAL PIPING. PROVIDE SLEEVES FOR ALL PENETRATIONS IN FOUNDATION WALL.
6. SEE GEOTECHNICAL DRAWINGS FOR ADDITIONAL REQUIREMENTS.

NOTE:
THE EXCAVATION, HANDLING, AND MANAGEMENT OF ALL SITE SOILS, INCLUDING THE ON-SITE REUSE OF EXISTING SITE SOILS TO THE FULLEST EXTENT FEASIBLE, SHALL BE PERFORMED IN ACCORDANCE WITH THE EARTHWORK SPECIFICATION SECTION 02300 AND THE SOIL MANAGEMENT PLAN PREPARED FOR USE ON THIS PROJECT, PURSUANT TO THE STATE OF CONNECTICUT REMEDIATION STANDARD REGULATIONS (RSRS). LAWN/LANDSCAPED AREAS OF THE SITE NOT COVERED BY THE PROPOSED BUILDINGS, CONCRETE OR PAVEMENT SHALL BE COVERED BY A GEOTEXTILE MARKER BARRIER AND A MINIMUM 4-FOOT SURFICIAL THICKNESS OF "CLEAN" SOIL, MEETING THE CT RSRS, AT FINISHED GRADE.

REINFORCED CONCRETE

1. ALL CONCRETE IS DESIGNED BY ULTIMATE STRENGTH METHODS PER ACI 318 AND SHALL BE NORMAL WEIGHT (UNLESS INDICATED AS LIGHT WEIGHT ON PLANS) AIR ENTRAINED WITH A 28 DAY COMPRESSIVE STRENGTH AS FOLLOWS:

WALLS AND FOUNDATIONS	3000 PSI
INTERIOR SLABS ON GRADE	3500 PSI
EXTERIOR SLABS ON GRADE	4500 PSI
BEAMS, COLUMNS, STRUCTURAL SLABS	4000 PSI
COMPOSITE CONCRETE SLABS	3000 PSI

2. ALL REINFORCING BARS SHALL BE HIGH STRENGTH DEFORMED BARS ASTM A 615 - GRADE 60 U.N.O.
3. REINFORCING BARS FOR WELDING TO STRUCTURAL STEEL SHALL BE ASTM A706 WELDABLE REINFORCING.
4. DETAIL ALL BARS IN ACCORDANCE WITH "ACI DETAILING MANUAL - 1988." SHOW ON THE PLACING DRAWINGS THE NUMBER AND LOCATION OF ALL BAR SUPPORTS AND ACCESSORIES NECESSARY TO SUPPORT REINFORCEMENT IN POSITIONS INDICATED.
5. MINIMUM CONCRETE PROTECTION FOR REINFORCEMENT WHEN NOT OTHERWISE INDICATED SHALL BE:

CONCRETE POURED AGAINST EARTH:	3"
CONCRETE POURED IN FORMS BUT EXPOSED TO EARTH OF WEATHER:	
BARS #5 AND SMALLER	1 - 1/2"
BARS LARGER THAN #5	2"
COLUMNS BEAMS AND GIRDERS:	1 - 1/2"
SLABS, WALLS NOT EXPOSED TO EARTH OR WEATHER:	3/4"

6. NO SPLICES OF REINFORCEMENT SHALL BE MADE EXCEPT AS DETAILED OR APPROVED BY THE STRUCTURAL ENGINEER. REBAR DEVELOPMENT / SPLICE LENGTH SHALL BE AS SHOWN BELOW UNLESS OTHERWISE NOTED. VALUES SHOWN ARE IN INCHES. MAKE ALL BARS CONTINUOUS AROUND CORNERS.

BEAMS		
BAR SIZE	BOTTOM BARS	OTHER BARS
#3	20	25
#4	25	33
#5	32	41
#6	38	49
#7	55	71
#8	63	81
#9	71	91
#10	80	103
#11	88	114

SLABS / MATS			
BAR SIZE	THICKNESS 12" OR LESS	THICKNESS GREATER THAN 12"	
	ALL BARS	BOTTOM BARS	OTHER BARS
#3	20	20	25
#4	25	25	33
#5	32	32	41
#6	38	38	49
#7	82	82	106
#8	94	94	121
#9	109	109	137
#10	119	119	154
#11	132	132	171

WALLS				
BAR SIZE	VERTICAL BARS		HORIZONTAL BARS	
	CASE 1	CASE 2	CASE 1	CASE 2
#3	20	29	25	36
#4	25	38	33	50
#5	32	47	41	61
#6	38	57	49	73
#7	55	82	71	106
#8	63	94	81	121
#9	71	106	91	137
#10	80	119	103	154
#11	88	132	114	171

COLUMNS	
BAR SIZE	VERTICAL BARS
#3	20
#4	25
#5	32
#6	38
#7	55
#8	63
#9	71
#10	80
#11	88

TABLES ARE BASED ON THE FOLLOWING:
1. f 'c = 4 KSI
2. MINIMUM CLEAR COVER AS SHOWN ABOVE.
3. MINIMUM CLEAR SPACING OF 3" BETWEEN ANY BARS.
4. fy = 60 KSI
5. NORMAL WEIGHT CONCRETE.
6. TABULATED VALUES REPRESENT CLASS B CONDITIONS. ALL SPLICES TO BE CLASS B U.N.O.
7. FOR WALLS:
   CASE 1 = CLEAR SPACING≥ 2db AND CLEAR COVER ≥ db
   CASE 2 = OTHER THAN CASE 1

FOR f 'c = 3 KSI DEVELOPMENT LENGTH = 1.15 x TABLE VALUE
f 'c = 5 KSI DEVELOPMENT LENGTH = 0.89 x TABLE VALUE

7. FOR LIGHTWEIGHT AGGREGATE CONCRETE, MULTIPLY THE TABULATED VALUES BY 1.3.
8. FOR EPOXY-COATED BARS, MULTIPLY THE TABULATED VALUES BY 1.5.
9. COMBINED EFFECTS DUE TO CONCRETE STRENGTH, CONCRETE WEIGHT, AND EPOXY BARS ARE CUMULATIVE. DEVELOPMENT LENGTH VALUES SHOWN SHALL BE MULTIPLIED BY EACH FACTOR TO FIND THE CORRECT VALUE.
10. SLABS, BEAMS AND WALLS SHALL HAVE NO JOINTS IN A HORIZONTAL PLANE. ANY STOP IN CONCRETE WORK MUST BE MADE AT CENTER OF SPAN OR AT CENTER OF SUPPORT WITH VERTICAL BULKHEADS, HORIZONTAL KEYS AND REINFORCING CONTINUING THROUGH. ALL CONSTRUCTION JOINTS SHALL BE AS DETAILED OR AS APPROVED BY THE STRUCTURAL ENGINEER.
11. WIRE MESH REINFORCEMENT MUST LAP ONE FULL MESH AT SIDE AND END LAPS, AND SHALL BE WIRED TOGETHER. PROVIDE ADEQUATE SUPPORTS FOR MESH TO INSURE ITS LOCATION AS SHOWN ON DRAWINGS.
12. CONDUITS AND PIPES SHALL BE PLACED ABOVE BOTTOM BARS AND BELOW TOP BARS AND SHALL NOT EXCEED 1/3 THE CONCRETE THICKNESS AT ANY CROSS SECTION. PARALLEL RUNS SHALL BE SPACED A MINIMUM OF 3 DIAMETERS ON CENTER. NO ALUMINUM OR COATED CONDUIT PIPE SHALL BE USED.

MASONRY

1. ALL MASONRY SHALL DEVELOP 1500 PSI COMPRESSIVE STRENGTH (f 'm) IN 28 DAYS.
2. ALL MORTAR SHALL BE TYPE S.
3. FILL ALL VOIDS AND BLOCK CELLS SOLIDLY WITH GROUT FOR A DISTANCE OF 24" BENEATH AND 12" EACH SIDE OF ALL BEAM REACTIONS OR OTHER CONCENTRATED LOADS.
4. ALL REINFORCING BARS SHALL CONFORM TO ASTM A615, GRADE 60.
5. ALL REINFORCING IN MASONRY SHALL BE FULLY GROUTED IN PLACE USING HIGH LIFT (OR LOW LIFT) GROUTING TECHNIQUES. SEE SPECIFICATIONS FOR DETAILS. CLEANOUTS SHALL BE PROVIDED FOR ALL GROUT POURS OVER 5 FEET IN HEIGHT AND SHALL BE PROVIDED AT THE BOTTOM OF ALL VERTICAL CELLS CONTAINING REINFORCING.
6. NO SPLICES IN REINFORCING BARS SHALL BE MADE EXCEPT AS DETAILED OR APPROVED BY THE STRUCTURAL ENGINEER. WHERE PERMITTED, ALL SPLICES SHALL BE LAPPED AS FOLLOWS:

   #3 BARS - 1'-6"
   #4 BARS - 2'-0"
   #5 BARS - 2'-6"
   #6 BARS - 3'-0"
   #7 BARS - 3'-6"

7. VERTICAL REINFORCING BARS SHALL BE PLACED USING GALVANIZED OR PLASTIC BAR POSITIONERS.
8. HORIZONTAL REINFORCING SHALL BE NO. 9 GAGE WIRE CONFORMING TO ASTM A82 AND SHALL BE PLACED EVERY OTHER COURSE U.N.O.
9. ALL MASONRY SHALL BE PLACED IN RUNNING BOND U.N.O.

STRUCTURAL STEEL

1. ALL STRUCTURAL STEEL SHALL CONFORM TO THE FOLLOWING UNLESS NOTED OTHERWISE ON THE DRAWINGS:

ROLLED WIDE FLANGE SECTIONS:	ASTM A572 OR A992, GRADE 50
ALL OTHER ROLLED SECTIONS:	ASTM A36
TUBULAR SECTIONS:	ASTM A500, GRADE B
PIPE SECTIONS:	ASTM A53, GRADE B
ANCHOR RODS:	ASTM F1554, GRADE 55
MOMENT FRAME CONNECTION PLATES:	ASTM A572, GRADE 50
MISC., PLATES AND CONNECTION MATERIALS:	ASTM A36

2. STRUCTURAL STEEL SHALL BE DETAILED, FABRICATED AND ERECTED IN ACCORDANCE WITH THE AISC SPECIFICATION FOR STRUCTURAL STEEL BUILDINGS, ASD OR LRFD AND THE AISC CODE OF STANDARD PRACTICE.
3. GRAVITY CONNECTIONS: CONNECTIONS NOT OTHERWISE DETAILED SHALL BE DOUBLE ANGLE FRAMED CONNECTIONS OR SEATED CONNECTIONS WITH TOP CLIP ANGLE STABILIZER. ALL BEAM TO COLUMN CONNECTIONS ARE TO BE MADE WITH HIGH STRENGTH BOLTS. ALL CONNECTIONS SHALL BE DESIGNED TO RESIST 50% OF THE MAXIMUM ALLOWABLE UNIFORM LOAD CAPACITY (70% FOR COMPOSITE BEAM) UNLESS OTHERWISE NOTED ON THE DRAWINGS.
4. WIND/SEISMIC CONNECTIONS: LATERAL LOAD CONNECTIONS INDICATED ON THE DRAWING ARE IN ADDITION TO THE GRAVITY CONNECTIONS REQUIRED.
5. ALL HIGH STRENGTH BOLTS SHALL CONFORM TO THE CURRENT SPECIFICATIONS FOR STRUCTURAL JOINTS USING ASTM A325 OR A490 BOLTS AS ENDORSED BY AISC. ALL BEAM TO COLUMN CONNECTIONS SHALL BE MADE WITH HIGH STRENGTH BOLTS AND SHALL BE FULLY TENSIONED. ALL OTHER HIGH STRENGTH BOLTED CONNECTIONS MAY BE SNUG TIGHT UNLESS NOTED AS SLIP CRITICAL ON DRAWING.
6. THE STRUCTURAL STEEL FABRICATOR SHALL SUBMIT CALCULATIONS FOR EACH TYPE OF CONNECTION UTILIZED ON THE PROJECT. CONNECTIONS SPECIFICALLY DETAILED ON STRUCTURAL DRAWINGS ARE EXCLUDED FROM THIS REQUIREMENT.
7. CALCULATIONS SHALL BE PREPARED BY A REGISTERED PROFESSIONAL ENGINEER. CONNECTIONS INCLUDE, BUT ARE NOT LIMITED TO, GRAVITY FRAME CONNECTIONS, MOMENT CONNECTIONS, AND BRACED FRAMING CONNECTIONS.
8. UNLESS SPECIFICALLY NOTED, STEEL DETAILS SHOWN ON THE DRAWINGS ARE FOR CONCEPT ONLY AND DO NOT INDICATE THE REQUIRED NUMBER OF BOLTS, SIZE OF WELD, ETC.
9. ALL WELDING SHALL CONFORM TO THE REQUIREMENTS OF THE AMERICAN WELDING SOCIETY (AWS) STRUCTURAL WELDING CODE - STEEL D1.1, LATEST EDITION. USE E70XX ELECTRODES UNLESS NOTED OTHERWISE.
10. ALL STEEL DECK SHALL BE DETAILED, ERECTED AND FASTENED IN ACCORDANCE WITH THE MANUFACTURER'S SUGGESTED SPECIFICATIONS AND THE CURRENT STEEL DECK INSTITUTE SPECIFICATIONS.
11. PROVIDE ALL PLATES, CLIP ANGLES, CLOSURE PIECES, STRAP ANCHORS, MISCELLANEOUS PIECES, AND HOLES REQUIRED TO COMPLETE THE STRUCTURE.
12. STEEL JOISTS AND BRIDGING SHALL BE DESIGNED, FABRICATED, AND ERECTED IN ACCORDANCE WITH STEEL JOIST INSTITUTE, SJI, SPECIFICATIONS.
13. STEEL JOISTS AND BRIDGING SHALL BE DESIGNED FOR A MIN NET UPLIFT OF 15 PSF U.N.O.
14. ALL LINTELS SHALL HAVE 6" MINIMUM BEARING EACH END UNLESS NOTED OTHERWISE.
15. ALL STEEL EXPOSED TO WEATHER, INCLUDING LINTELS IN EXTERIOR WALLS SHOULD BE HOT DIP GALVANIZED UNO

POST-INSTALLED FASTENERS AND ANCHORS

1. ALL HOLES INTO MASONRY OR CONCRETE WALLS FOR PROPRIETARY ANCHORING SYSTEMS SHALL BE DRILLED AND CLEANED IN STRICT ACCORDANCE WITH THE MANUFACTURER'S RECOMMENDATIONS.
2. ALL PROPRIETARY ANCHORING SYSTEMS SHALL BE INSTALLED IN STRICT ACCORDANCE WITH THE MANUFACTURER'S REQUIREMENTS AND USING ALL RECOMMENDED ACCESSORIES AND SUPPLEMENTAL COMPONENTS SUCH AS SCREEN TUBES, WASHERS, ETC.
3. ALL HOLES IN HOLLOW MASONRY SHALL BE DRILLED WITH ROTARY DRILLS. HAMMER DRILLS ARE NOT PERMITTED.
4. ALL EPOXY ADHESIVE SHALL BE HILTI RE-500, SIMPSON ET OR APPROVED EQUAL. U.N.O.
5. ALL ACRYLIC ADHESIVE SHALL BE HILTI HIT (ICE, HY150 OR HY20), SIMPSON AT OR APPROVED EQUAL. U.N.O.
6. ALL THREADED CONCRETE/MASONRY ANCHORS SHALL BE HILTI HUS-H, SIMPSON TITEN, ITW TAP-CON OR APPROVED EQUAL. U.N.O.
7. ALL EXPANSION ANCHORS SHALL BE HILTI KWIK-BOLT 3, SIMPSON WEDGE-ALL OR APPROVED EQUAL. U.N.O.

WOOD

1. ALL FRAMING LUMBER SHALL BE DRY (19% MAXIMUM MOISTURE CONTENT) SPF U.N.O. PRESSURE TREATED SOUTHERN PINE SHALL BE USED FOR GROUND CONTACT, SILL PLATES, OR EXTERIOR USE.

   STUDS SHALL BE STUD GRADE OR BETTER

   ALL OTHER MEMBERS SHALL BE NO. 2 OR BETTER.

   FOR EXPOSED FRAMING SEE ARCHITECTURAL DRAWINGS FOR ADDITIONAL REQUIREMENTS.

2. PROVIDE 1" x 4" CROSS-BRIDGING FOR ALL WOOD JOISTS AT 8'-0" oc. MAXIMUM SPACING AND 2x SOLID BLOCKING BETWEEN JOISTS AT ALL SUPPORTS AND PARTITIONS.
3. WHERE FRAMING CLIPS OR JOISTS HANGERS ARE USED, NAILING SHALL BE AS PER MANUFACTURER'S RECOMMENDATIONS.
4. ALL OPENINGS SHALL BE FRAMED WITH DOUBLE MEMBERS UNLESS OTHERWISE NOTED ON PLANS.
5. TRUSSES SHALL BE DESIGNED AND CONSTRUCTED ACCORDING TO TRUSS PLATE INSTITUTE, TPI, SPECIFICATIONS AND SHALL BE INSTALLED AS PER MANUFACTURER'S RECOMMENDATIONS. IF FIRE RETARDANT LUMBER IS USED FOR TRUSS MEMBERS, CHEMICALS USED SHALL BE COMPATIBLE AND NON-CORROSIVE TO GALVANIZED CONNECTOR PLATES.
6. TRUSS MANUFACTURER SHALL RETAIN A LICENSED SPECIALTY ENGINEER OF RECORD TO PROVIDE SIGNED AND SEALED CALCULATIONS OF TRUSS DESIGNS. CALCULATIONS SHALL INCLUDE LOADS AND LOCATIONS OF ANY TEMPORARY AND OR PERMANENT BRACING REQUIRED.
7. METAL CONNECTOR HARDWARE SHOWN ON PLANS AND DETAILS ARE SIMPSON STRONG-TIE CONNECTORS AND ARE SELECTED FOR LOAD REQUIREMENTS. SUBSTITUTION IS PERMITTED IF LOAD CAPACITIES OF ALTERNATE ARE OF EQUAL OR GREATER CAPACITY THAN COMPARABLE SIMPSON CONNECTOR. FASTENING SHALL BE PER MANUFACTURER'S REQUIREMENTS.

WOOD DECKING

1. WOOD DECK SHALL BE TONGUE AND GROOVED LAMINATED OF DOUGLAS FIR/LARCH IN DECORATIVE GRADE.

   E = 1.8x106/ PSI
   Fb = 2600 PSI

2. DECKING TO BE INSTALLED IN RANDOM LENGTH CONTINUOUS LAY-UP.
3. DECKING SHALL BE FACE NAILED TO SUPPORTING BEAMS WITH 20d OR 30d COMMON OR RING SHANK NAILS. NAIL ADJACENT COURSES OF DECK WITH 8d NAILS AT 30" Oc. OFFSET ALTERNATE COURSES BY 15". SLANT NAIL WITHIN 12" OF EACH END OF JOINT.

ENGINEERED WOOD

1. ALL ENGINEERED LUMBER SHALL HAVE THE FOLLOWING MINIMUM DESIGN PROPERTIES:

ENGINEERED WOOD PROPERTIES					
	Fb (psi)	Fc PARR (psi)	Fc PERP (psi)	Fv (psi)	E (psi)
LVL	-	-	-	-	-
LSL	-	-	-	-	-
PSL	-	-	-	-	-
TJI	-	-	-	-	-

NAILING SCHEDULE	
CONNECTION	NAILING
JOIST TO SILL OR GIRDER, TOE NAIL	3-8d
WOOD I-JOIST TO WALL PLATE	2-10d
BRIDGING TO JOIST, TOE NAIL EACH END	2-8d
SOLE PLATE TO JOIST OR BLOCKING, FACE NAIL	16d @ 16" o.c.
TOP OR SOLE PLATE TO STUD, END NAIL	
2x4	2-16d
2x6	3-16d
2x8	4-16d
STUD TO SOLE PLATE, TOE NAIL	
2x4	4-8d
2x6, 2x8	5-10d
DOUBLED STUDS, FACE NAIL	16d @ 24" o.c.
DOUBLED TOP PLATES, FACE NAILED	16d @ 16" o.c.
TOP PLATES, LAPS AND INTERSECTIONS, FACE NAIL	2-16d
CONTINUOUS HEADER, TWO PIECES	16d @ 16" o.c. ALONG EACH EDGE
CONTINUOUS HEADER TO STUD, TOE NAIL	4-8d
CEILING JOIST TO PLATE, TOE NAIL	3-8d
CEILING JOIST, LAPS OVER PARTITIONS, FACE NAIL	3-16d
CEILING JOIST TO PARALLEL RAFTERS, FACE NAIL	3-16d
RAFTER TO PLATE, TOE NAIL	3-8d
BUILT-UP CORNER STUDS	16d @ 24" o.c.
BUILT-UP GIRDERS AND BEAMS	20d @ 32" o.c. AT TOP AND BOTTOM AND STAGGERED 2-20d AT ENDS AND AT EACH SPLICE
PLYWOOD SUBFLOOR, ROOF, AND WALL SHEATHING TO FRAMING	
1/2"	8d
5/8" - 3/4"	10d

NAILING SCHEDULE IS BASED ON COMMON WIRE NAILS.
LARGER NAIL SIZES ARE REQUIRED FOR BOX OR PNEUMATIC DRIVEN FASTENERS.
SUBSTITUTING PNEUMATIC NAILS OF EQUAL DIAMETER IS ACCEPTABLE.

COMMON WIRE NAIL DIAMETERS:
6d = 0.113" 12d = 0.148"
8d = 0.131" 16d = 0.162"
10d = 0.148" 20d = 0.192"

HOLD-DOWN SCHEDULE

LABEL	4TH LVL COMPONENTS	3RD LVL COMPONENTS	2ND LVL COMPONENTS	1ST LVL COMPONENTS	ANCHORAGE	COMPRESSION MEMBER
HD1	N/A	N/A	ATS-N5 & ATS-BP5-3X5.5 & ATS-SR5 & ATS-C75	ATS-IN7 & ATS-BP7-3X5.5 & ATS-SR7 & ATS-CTUD77	ATS-AB7 OR ATS-1/2-2D	2-2X6 EA SIDE
HD2	N/A	ATS-N5 & ATS-BP5-3X5.5 & ATS-SR5 & ATS-C55	ATS-IN5 & ATS-BP5-3X5.5 & ATS-SR5 & ATS-CTUD75	ATS-IN7 & ATS-BP7-3X5.5 & ATS-SR7 & ATS-CTUD77	ATS-AB7 OR ATS-1/2-2D	2-2X6 EA SIDE
HD3	N/A	ATS-N5 & ATS-BP5-3X5.5 & ATS-SR5 & ATS-C75	ATS-IN7 & ATS-BP7-3X5.5 & ATS-SR7 & ATS-CTUD97	ATS-IN9 & ATS-BP9-5X5.5 & ATS-SR9 & ATS-CTUD99	ATS-AB9 OR ATS-1/2-2D	3-2X6 EA SIDE
HD4	ATS-N5 & ATS-BP5-3X3.5 & ATS-SR5 & ATS-C55	ATS-IN5 & ATS-BP5-3X3.5 & ATS-SR5 & ATS-CTUD55	ATS-IN5 & ATS-BP5-3X3.5 & ATS-SR5 & ATS-CTUD55	ATS-IN5 & ATS-BP5-3X3.5 & ATS-SR5 & ATS-CTUD55	ATS-AB7 OR ATS-1/2-2D	3-2X6 EA SIDE
HD5	ATS-N5 & ATS-BP5-3X5.5 & ATS-SR5 & ATS-C55	ATS-IN5 & ATS-BP5-3X5.5 & ATS-SR5 & ATS-CTUD75	ATS-IN7 & ATS-BP7-3X5.5 & ATS-SR7 & ATS-CTUD97	ATS-IN9 & ATS-BP9-5X5.5 & ATS-SR9 & ATS-CTUD99	ATS-AB9 OR ATS-1/2-2D	3-2X6 EA SIDE
HD6	ATS-N7 & ATS-BP7-3X5.5 & ATS-SR7 & ATS-C77	ATS-IN7 & ATS-BP7-3X5.5 & ATS-SR7H & ATS-CTUD77	ATS-IN7 & ATS-BP7-3X5.5 & ATS-SR7H & ATS-CTUD97	ATS-IN9 & ATS-BP10-5X9 & ATS-SR9H & ATS-CTUD99	ATS-AB9H OR ATS-1/2-2D	6-2X6 EA SIDE

HOLD-DOWN NOTES:
1. SIMPSON ANCHOR TIEDOWN SYSTEM (ATS) REFERENCED.
2. SEE S-100 SERIES DWGS FOR HOLD-DOWN LOCATIONS.
3. SEE S-200 SERIES DWGS FOR TYPICAL DETAILS.

FOUNDATION NOTES:
1. SEE S-001 FOR GENERAL NOTES.
2. SEE S-200 SERIES DWGS FOR TYPICAL DETAILS.
3. [xx.xx] DENOTES BOTTOM OF FOOTING ELEVATION.
4. Fx.x INDICATES SPREAD FOOTING DESIGNATION. SEE FOOTING SCHEDULE THIS SHEET.
5. SLABS ON GRADE TO BE REINFORCED WITH ONE LAYER OF 6x6-W2.0xW2.0 WIRE MESH.
6. ALL CMU WALLS ARE 8" CMU REINFORCED WITH #5@48 VERT U.N.O.

FOUNDATION SCHEDULE

Mark	Dimensions Width	Dimensions Length	Depth	Bottom Bars
F3.0	3'-0"	3'-0"	1'-0"	3#5 Each Way Bottom
F4.5	4'-6"	4'-6"	1'-0"	7#4 Each Way Bottom
F5.0	5'-0"	5'-0"	1'-2"	5#5 Each Way Bottom
F6.0	6'-0"	6'-0"	1'-4"	6#6 Each Way Bottom
F7.0	7'-0"	7'-0"	1'-7"	7#6 Each Way Bottom
F8.0	8'-0"	8'-0"	1'-10"	9#6 Each Way Bottom

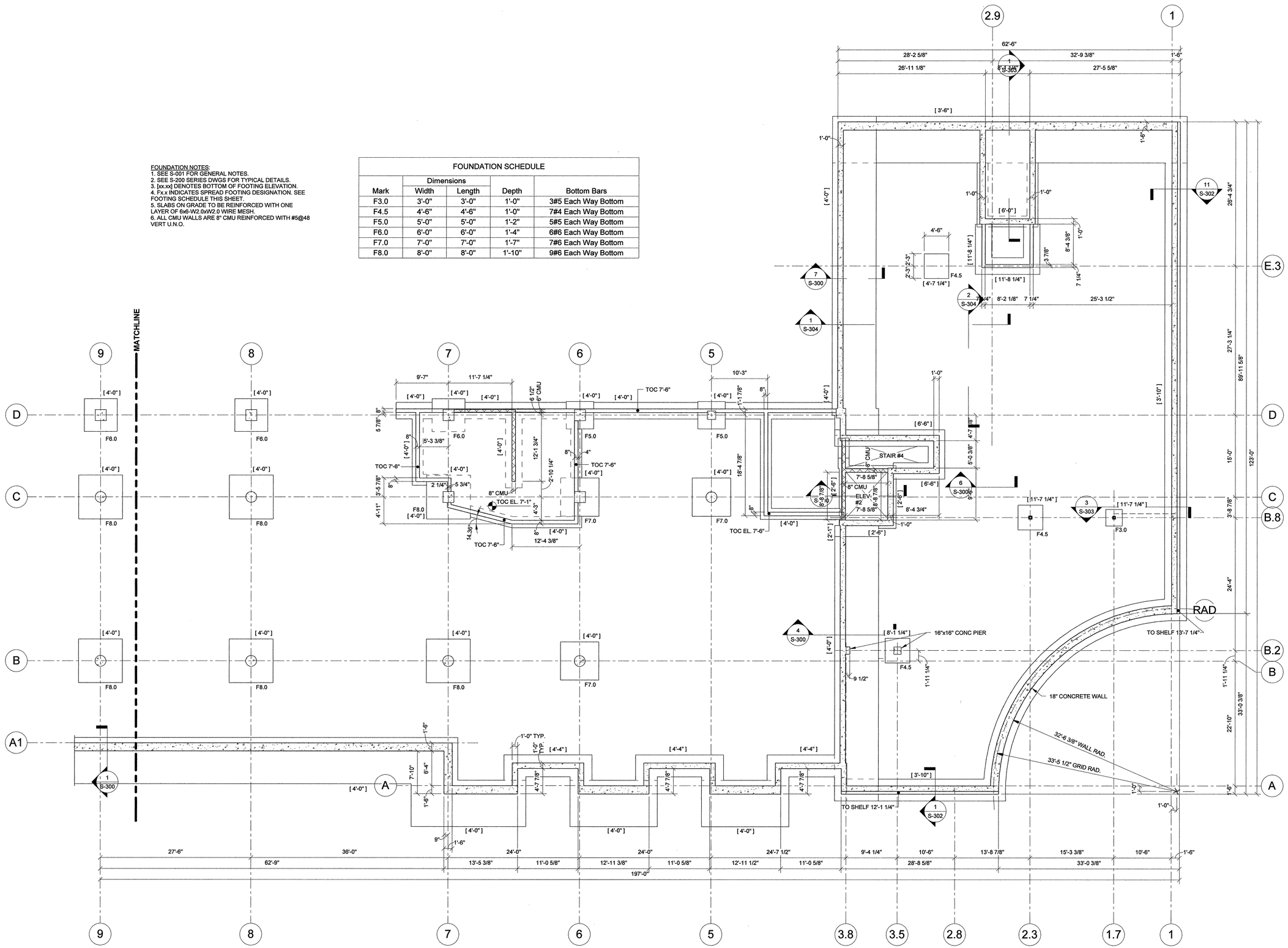

1 S1.1A FOUNDATION LEVEL PLAN
1/8" = 1'-0"

Washington Village Phase 1

20 Day Street Building B

Norwalk, CT

Trinity Washington Village Limited Partnership
&
the Norwalk Housing Authority

E-ICON ARCHITECTURE
101 SUMMER ST BOSTON MA 02110
617-451-3333 www.iconarch.com

CONSULTANT
GNCB Consulting Engineers, P.C.
130 ELM STREET
POST OFFICE BOX 802
OLD SAYBROOK
CONNECTICUT 06475
PHONE: 860 388 1224
FAX: 860 388 4613
GNCBENGINEERS.COM

STAMP

MARK	DATE	DESCRIPTION
	09-15-2014	PERMIT/ PRICING
	06-13-2014	PRICING
	11-18-2013	40% CHFA
	09-19-2013	CAM/ SPECIAL PERMIT

PROJECT NO.: 21222 GNCB NO.: 13147
DRAWN BY:
CHECKED BY:

SHEET TITLE

FOUNDATION PLAN

S-100A

Issue Date C:\Users\GNCB028\Documents\Local Revit\13147 Washington Village Replacement-Norwalk\13147 S14 Washington Village - Building B - Local.rvt

FOUNDATION NOTES:
1. SEE S-001 FOR GENERAL NOTES.
2. SEE S-200 SERIES DWGS FOR TYPICAL DETAILS.
3. [xx.xx] DENOTES BOTTOM OF FOOTING ELEVATION.
4. F.x.x INDICATES SPREAD FOOTING DESIGNATION. SEE FOOTING SCHEDULE THIS SHEET.
5. SLABS ON GRADE TO BE REINFORCED WITH ONE LAYER OF 6x6-W2.0xW2.0 WIRE MESH.
6. ALL CMU WALLS ARE 8" CMU REINFORCED WITH #5@48 VERT U.N.O.

FOUNDATION SCHEDULE				
	Dimensions			
Mark	Width	Length	Depth	Bottom Bars
F3.0	3'-0"	3'-0"	1'-0"	3#5 Each Way Bottom
F4.5	4'-6"	4'-6"	1'-0"	7#4 Each Way Bottom
F5.0	5'-0"	5'-0"	1'-2"	5#5 Each Way Bottom
F6.0	6'-0"	6'-0"	1'-4"	6#6 Each Way Bottom
F7.0	7'-0"	7'-0"	1'-7"	7#6 Each Way Bottom
F8.0	8'-0"	8'-0"	1'-10"	9#6 Each Way Bottom

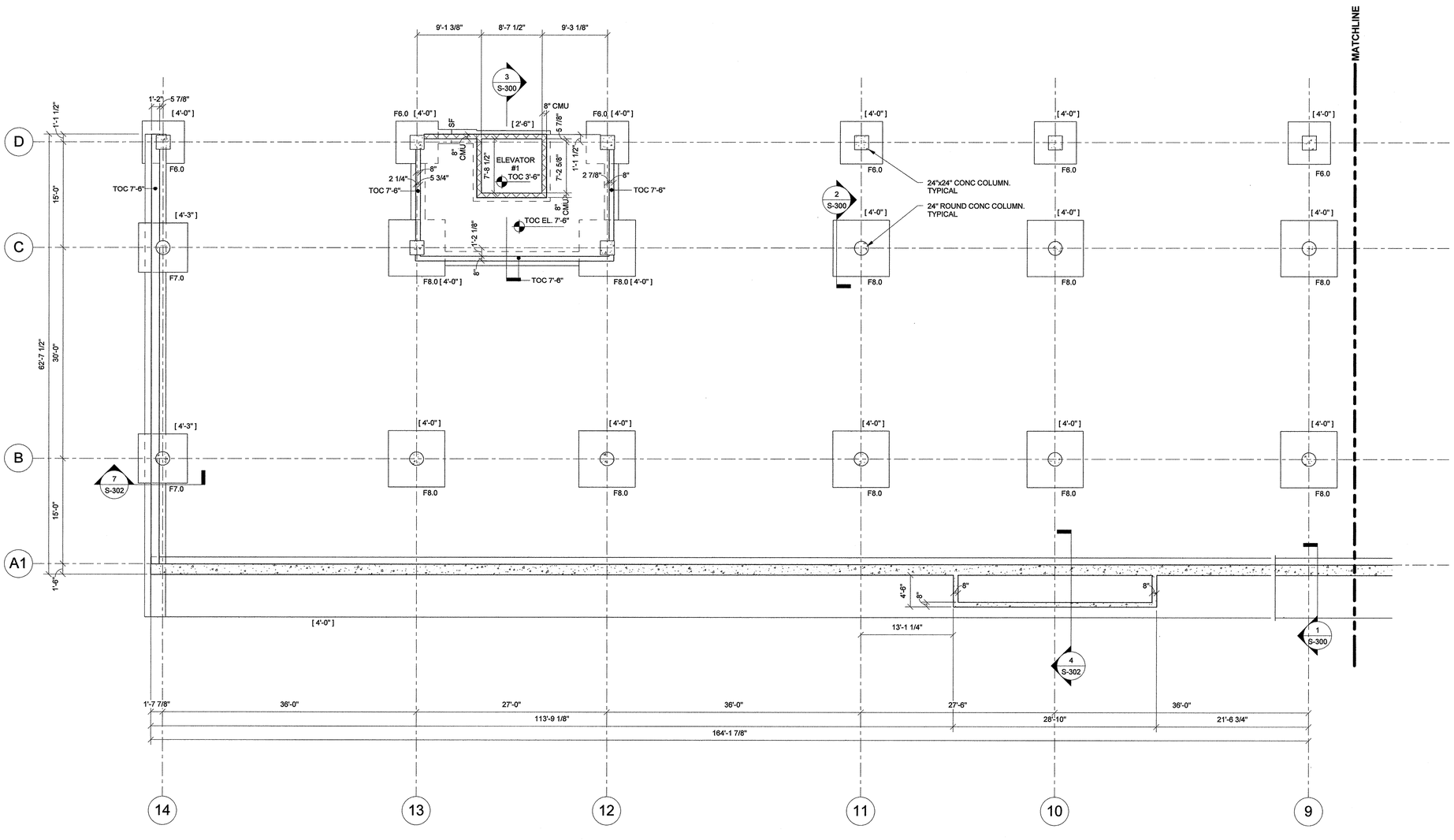

1 S1.1B FOUNDATION LEVEL PLAN
1/8" = 1'-0"

Washington Village Phase 1

20 Day Street Building B

Norwalk, CT

Trinity Washington Village Limited Partnership
&
the Norwalk Housing Authority

E-ICON ARCHITECTURE
101 SUMMER ST BOSTON MA 02110
617-451-3333 www.iconarch.com

CONSULTANT
GNCB Consulting Engineers, P.C.
130 ELM STREET
POST OFFICE BOX 802
OLD SAYBROOK
CONNECTICUT 06475
PHONE: 860 388 1224
FAX: 860 388 4613
GNCBENGINEERS.COM

STAMP

STATE OF CONNECTICUT · CHARLES G. BRAUN · LICENSED PROFESSIONAL ENGINEER

MARK	DATE	DESCRIPTION
	09-15-2014	PERMIT/ PRICING
	06-13-2014	PRICING
	11-18-2013	40% CHFA
	09-19-2013	CAM/ SPECIAL PERMIT

PROJECT NO.: 21222 GNCB NO.: 13147
DRAWN BY:
CHECKED BY:

SHEET TITLE

FOUNDATION PLAN

S-100B

Issue Date C:\Users\GNCB228\Documents\Local Revit\13147 Washington Village Replacement-Norwalk\13147 S14 Washington Village - Building B - Local.rvt

FLOOR SCHEDULE		
MARK	DESCRIPTION	COMMENTS
A	5 " NW CONC W/ 2" COMPOSITE DECK	CONCRETE CONTAINS BARRIER 1
B	3/4" PLYWOOD DECK	

PLAN NOTES:

1. SEE S-001 FOR GENERAL NOTES.
2. SEE S-200 SERIES DWGS FOR TYPICAL DETAILS.
3. ▶——— DENOTES MOMENT CONNECTION.
4. ALL OPEN WEB WOOD JOISTS ARE TOP CHORD BEARING UNO
5. ALL STUD WALLS ARE 2x6s AT 24"oc U.N.O.
6. [ ] AND [ ] INDICATE LINE LOADS ON OPEN WEB JOISTS. FABRICATOR TO INCLUDE LINE LOADS IN JOIST DESIGN.
7. CONCRETE SLABS (ON DECK AND ON GRADE) TO BE REINFORCED WITH ONE LAYER OF 6x6-W2.0xW2.0 WIRE MESH.
8. ALL CMU WALLS ARE 8" CMU REINFORCED WITH #5@48 VERT U.N.O.

SHEAR WALL NOTES:

1. ▨ DENOTES SHEAR WALL.
2. ALL EXTERIOR SHEAR WALLS TO BE SHEATHED WITH 5/8" PLYWOOD ON ONE SIDE WITH 10d NAILS AT 4"oc AT EDGES AND 12"oc IN FIELD U.N.O.
3. ALL INTERIOR SHEAR WALLS (DEMISING WALLS BETWEEN UNITS) TO BE SHEATHED WITH MIN 1/2" PLYWOOD ON ONE SIDE WITH 10d NAILS AT 4"oc AT EDGES AND 12"oc IN FIELD U.N.O.
4. ALL NAILS ARE ASSUMED TO BE COMMON WIRE NAILS.
5. PROVIDE 1'-0" MIN LAP ONTO WALL STUDS ABOVE FLOOR FRAMING TYPICAL. NO HORIZONTAL PANEL JOINTS AT FLOOR FRAMING.
6. PROVIDE SOLID BLOCKING AT ALL SHEATHING PANEL EDGES TYPICAL. DIMENSIONS SIZE TO MATCH WALL FRAMING.
7. WHERE SHEATHING IS INSTALLED ON BOTH FACES OF WALL, OFFSET VERTICAL PANEL EDGES TO FALL ON DIFFERENT FRAMING MEMBERS.
8. SHEATHING MAY BE INSTALLED HORIZONTAL OR VERTICAL U.N.O.
9. HDx DENOTES HOLD-DOWN LOCATION. SEE SHEET S-001 FOR HOLD-DOWN SCHEDULE.

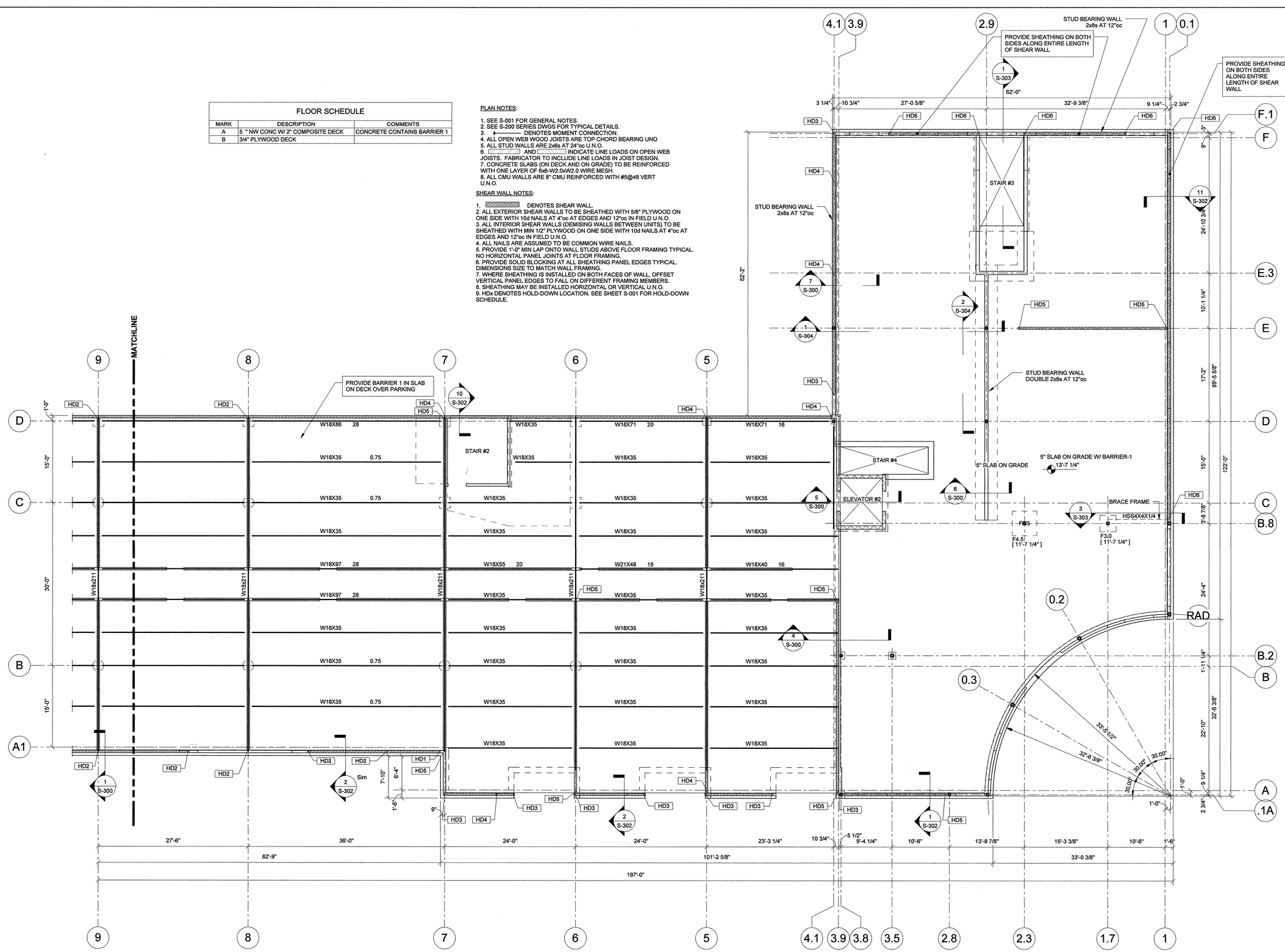

1 S1.2A FIRST FLOOR FRAMING PLAN
1/8" = 1'-0"

Washington Village Phase 1

20 Day Street Building B

Norwalk, CT

Trinity Washington Village Limited Partnership
&
the Norwalk Housing Authority

E-ICON ARCHITECTURE
101 SUMMER ST BOSTON MA 02110
617-451-3333 www.iconarch.com

CONSULTANT

GNCB Consulting Engineers, P.C.
130 ELM STREET
POST OFFICE BOX 802
OLD SAYBROOK
CONNECTICUT 06475
PHONE: 860 388 1224
FAX: 860 388 4613
GNCBENGINEERS.COM

STAMP

STATE OF CONNECTICUT · JAMES C. BROWN · LICENSED PROFESSIONAL ENGINEER

MARK	DATE	DESCRIPTION
	09-15-2014	PERMIT/ PRICING
	06-13-2014	PRICING
	11-18-2013	40% CHFA
	09-19-2013	CAM/ SPECIAL PERMIT

PROJECT NO.: 21222 | GNCB NO.: 13147
DRAWN BY:
CHECKED BY:

SHEET TITLE

FIRST FLOOR FRAMING PLAN

S-101A

Issue Date C:\Users\GNCB2028\Documents\Local Revit\13147 Washington Village Replacement-Norwalk\13147 S14 Washington Village - Building B - Local.rvt

FLOOR SCHEDULE		
MARK	DESCRIPTION	COMMENTS
A	5 " NW CONC W/ 2" COMPOSITE DECK	CONCRETE CONTAINS BARRIER 1
B	3/4" PLYWOOD DECK	

PLAN NOTES:

1. SEE S-001 FOR GENERAL NOTES.
2. SEE S-200 SERIES DWGS FOR TYPICAL DETAILS.
3. ⊢—— DENOTES MOMENT CONNECTION.
4. ALL OPEN WEB WOOD JOISTS ARE TOP CHORD BEARING UNO
5. ALL STUD WALLS ARE 2x6s AT 24"oc U.N.O.
6. [▨] AND [▨] INDICATE LINE LOADS ON OPEN WEB JOISTS. FABRICATOR TO INCLUDE LINE LOADS IN JOIST DESIGN.
7. CONCRETE SLABS (ON DECK AND ON GRADE) TO BE REINFORCED WITH ONE LAYER OF 6x6-W2.0xW2.0 WIRE MESH.
8. ALL CMU WALLS ARE 8" CMU REINFORCED WITH #5@48 VERT U.N.O.

SHEAR WALL NOTES:

1. [▨] DENOTES SHEAR WALL.
2. ALL EXTERIOR SHEAR WALLS TO BE SHEATHED WITH 5/8" PLYWOOD ON ONE SIDE WITH 10d NAILS AT 4"oc AT EDGES AND 12"oc IN FIELD U.N.O.
3. ALL INTERIOR SHEAR WALLS (DEMISING WALLS BETWEEN UNITS) TO BE SHEATHED WITH MIN 1/2" PLYWOOD ON ONE SIDE WITH 10d NAILS AT 4"oc AT EDGES AND 12"oc IN FIELD U.N.O.
4. ALL NAILS ARE ASSUMED TO BE COMMON WIRE NAILS.
5. PROVIDE 1'-0" MIN LAP ONTO WALL STUDS ABOVE FLOOR FRAMING TYPICAL. NO HORIZONTAL PANEL JOINTS AT FLOOR FRAMING.
6. PROVIDE SOLID BLOCKING AT ALL SHEATHING PANEL EDGES TYPICAL. DIMENSIONS SIZE TO MATCH WALL FRAMING.
7. WHERE SHEATHING IS INSTALLED ON BOTH FACES OF WALL, OFFSET VERTICAL PANEL EDGES TO FALL ON DIFFERENT FRAMING MEMBERS.
8. SHEATHING MAY BE INSTALLED HORIZONTAL OR VERTICAL U.N.O.
9. HDx DENOTES HOLD-DOWN LOCATION. SEE SHEET S-001 FOR HOLD-DOWN SCHEDULE.

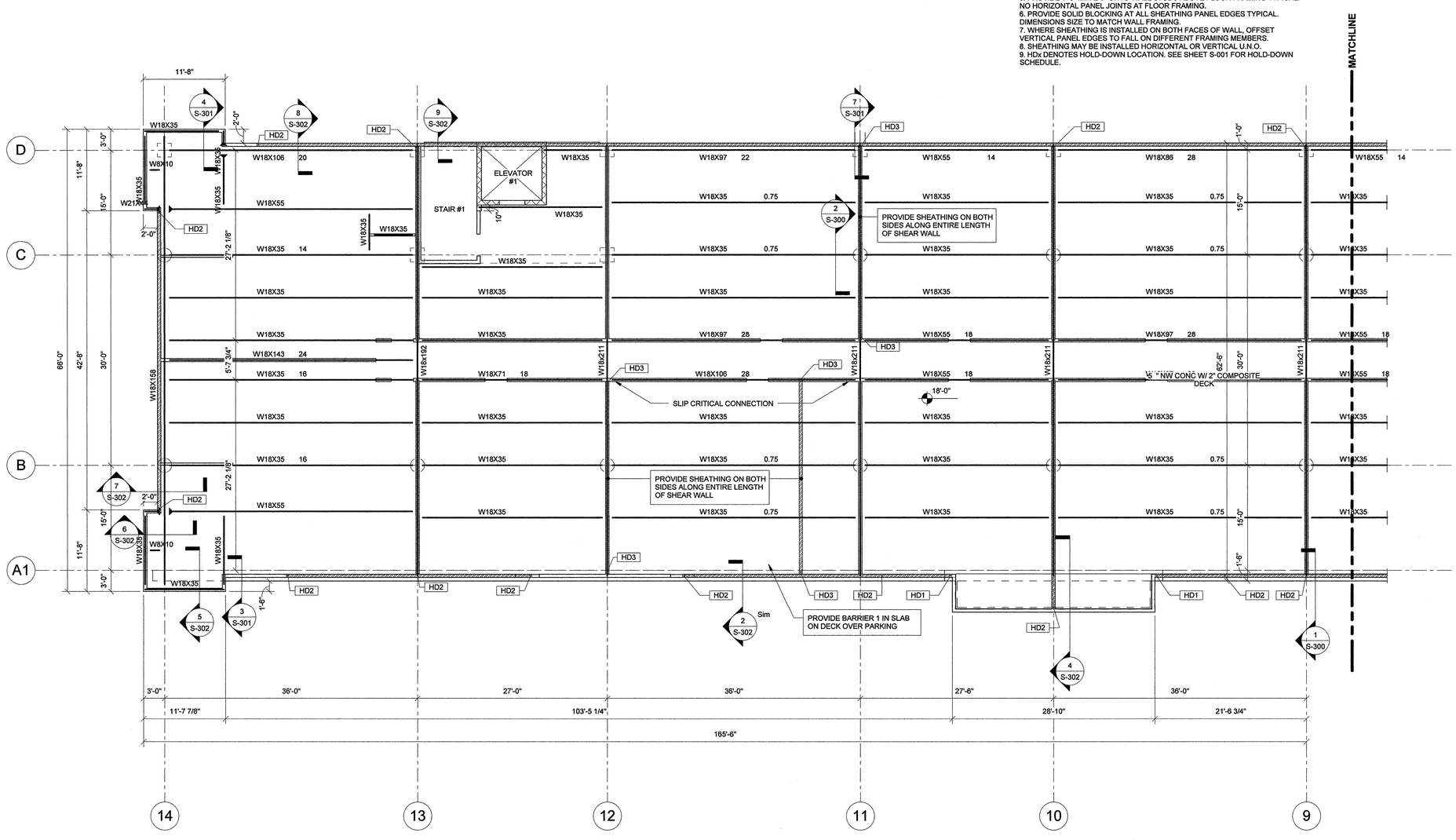

1 S1.2B FIRST FLOOR FRAMING PLAN
1/8" = 1'-0"

Washington Village Phase 1

20 Day Street Building B

Norwalk, CT

Trinity Washington Village Limited Partnership
&
the Norwalk Housing Authority

E-ICON ARCHITECTURE
101 SUMMER ST BOSTON MA 02110
617-451-3333 www.iconarch.com

CONSULTANT

GNCB Consulting Engineers, P.C.
130 ELM STREET
POST OFFICE BOX 802
OLD SAYBROOK
CONNECTICUT 06475
PHONE: 860 388 1224
FAX: 860 388 4613
GNCBENGINEERS.COM

STAMP

STATE OF CONNECTICUT · CHARLES G. BROWN · 25390 · REGISTERED PROFESSIONAL ENGINEER

MARK	DATE	DESCRIPTION
	09-15-2014	PERMIT/ PRICING
	06-13-2014	PRICING
	11-18-2013	40% CHFA
	09-19-2013	CAM/ SPECIAL PERMIT

PROJECT NO.: 21222 | GNCB NO.: 13147
DRAWN BY:
CHECKED BY:

SHEET TITLE

FIRST FLOOR FRAMING PLAN

S-101B

Issue Date C:\Users\GNCB\B2B\Documents\Local Revit\13147 Washington Village Replacement-Norwalk\13147 S14 Washington Village - Building B - Local.rvt

FLOOR SCHEDULE		
MARK	DESCRIPTION	COMMENTS
A	5 " NW CONC W/ 2" COMPOSITE DECK	CONCRETE CONTAINS BARRIER 1
B	3/4" PLYWOOD DECK	

LINE LOADS

	DL (PLF)	LL (PLF)	SL (PLF)
L2.1:	1697	2100	525

PLAN NOTES:

1. SEE S-001 FOR GENERAL NOTES.
2. SEE S-200 SERIES DWGS FOR TYPICAL DETAILS.
3. ▸— DENOTES MOMENT CONNECTION.
4. ALL OPEN WEB WOOD JOISTS ARE TOP CHORD BEARING UNO
5. ALL STUD WALLS ARE 2x6s AT 24"oc U.N.O.
6. [ ] AND [ ] INDICATE LINE LOADS ON OPEN WEB JOISTS. FABRICATOR TO INCLUDE LINE LOADS IN JOIST DESIGN.
7. CONCRETE SLABS (ON DECK AND ON GRADE) TO BE REINFORCED WITH ONE LAYER OF 6x6-W2.0xW2.0 WIRE MESH.
8. ALL CMU WALLS ARE 8" CMU REINFORCED WITH #5@48 VERT U.N.O.

SHEAR WALL NOTES:

1. ▨ DENOTES SHEAR WALL.
2. ALL EXTERIOR SHEAR WALLS TO BE SHEATHED WITH 5/8" PLYWOOD ON ONE SIDE WITH 10d NAILS AT 4"oc AT EDGES AND 12"oc IN FIELD U.N.O.
3. ALL INTERIOR SHEAR WALLS (DEMISING WALLS BETWEEN UNITS) TO BE SHEATHED WITH MIN 1/2" PLYWOOD ON ONE SIDE WITH 10d NAILS AT 4"oc AT EDGES AND 12"oc IN FIELD U.N.O.
4. ALL NAILS ARE ASSUMED TO BE COMMON WIRE NAILS.
5. PROVIDE 1'-0" MIN LAP ONTO WALL STUDS ABOVE FLOOR FRAMING TYPICAL. NO HORIZONTAL PANEL JOINTS AT FLOOR FRAMING.
6. PROVIDE SOLID BLOCKING AT ALL SHEATHING PANEL EDGES TYPICAL. DIMENSIONS SIZE TO MATCH WALL FRAMING.
7. WHERE SHEATHING IS INSTALLED ON BOTH FACES OF WALL, OFFSET VERTICAL PANEL EDGES TO FALL ON DIFFERENT FRAMING MEMBERS.
8. SHEATHING MAY BE INSTALLED HORIZONTAL OR VERTICAL U.N.O.
9. HDx DENOTES HOLD-DOWN LOCATION. SEE SHEET S-001 FOR HOLD-DOWN SCHEDULE.

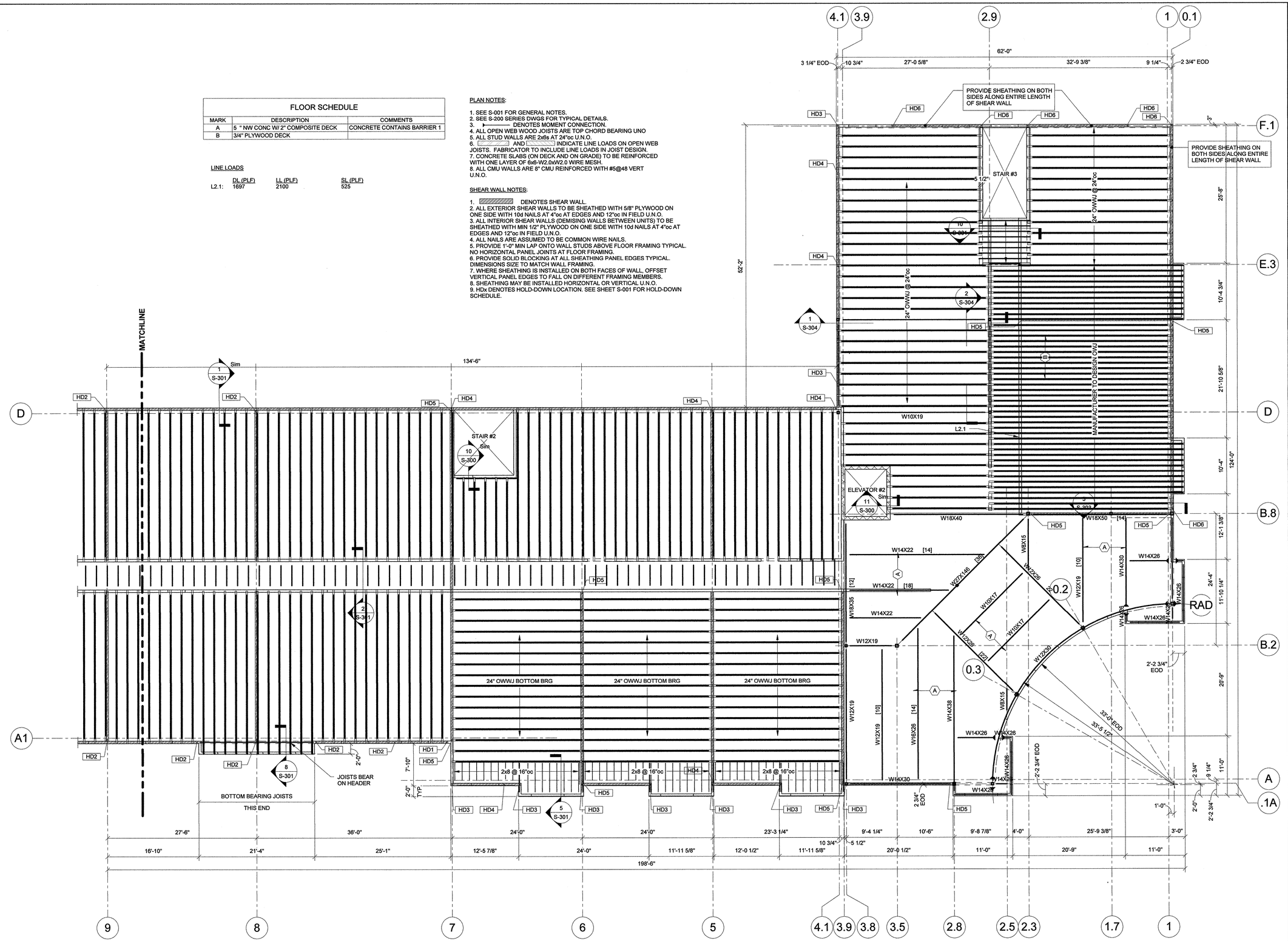

1 S1.3A SECOND FLOOR FRAMING PLAN
1/8" = 1'-0"

Washington Village Phase 1

20 Day Street Building B

Norwalk, CT

Trinity Washington Village Limited Partnership
&
the Norwalk Housing Authority

E-ICON ARCHITECTURE
101 SUMMER ST BOSTON MA 02110
617-451-3333 www.iconarch.com

CONSULTANT

GNCB Consulting Engineers, P.C.
130 ELM STREET
POST OFFICE BOX 802
OLD SAYBROOK
CONNECTICUT 06475
PHONE: 860 388 1224
FAX: 860 388 4613
GNCBENGINEERS.COM

STAMP

STATE OF CONNECTICUT · CHARLES G. NEGRON · 24390 · REGISTERED · PROFESSIONAL ENGINEER

MARK	DATE	DESCRIPTION
	09-15-2014	PERMIT/ PRICING
	06-13-2014	PRICING
	11-18-2013	40% CHFA
	09-19-2013	CAM/ SPECIAL PERMIT

PROJECT NO.: 21222 GNCB NO.: 13147
DRAWN BY:
CHECKED BY:

SHEET TITLE

SECOND FLOOR FRAMING PLAN

S-102A

Issue Date C:\Users\GNCB028\Documents\Local Revit\13147 Washington Village Replacement-Norwalk13147 S14 Washington Village - Building B - Local.rvt

FLOOR SCHEDULE		
MARK	DESCRIPTION	COMMENTS
A	5 " NW CONC W/ 2" COMPOSITE DECK	CONCRETE CONTAINS BARRIER 1
B	3/4" PLYWOOD DECK	

PLAN NOTES:

1. SEE S-001 FOR GENERAL NOTES.
2. SEE S-200 SERIES DWGS FOR TYPICAL DETAILS.
3. ⊢—— DENOTES MOMENT CONNECTION.
4. ALL OPEN WEB WOOD JOISTS ARE TOP CHORD BEARING UNO
5. ALL STUD WALLS ARE 2x6s AT 24"oc U.N.O.
6. [ ] AND [ ] INDICATE LINE LOADS ON OPEN WEB JOISTS. FABRICATOR TO INCLUDE LINE LOADS IN JOIST DESIGN.
7. CONCRETE SLABS (ON DECK AND ON GRADE) TO BE REINFORCED WITH ONE LAYER OF 6x6-W2.0xW2.0 WIRE MESH.
8. ALL CMU WALLS ARE 8" CMU REINFORCED WITH #5@48 VERT U.N.O.

SHEAR WALL NOTES:

1. [ ] DENOTES SHEAR WALL.
2. ALL EXTERIOR SHEAR WALLS TO BE SHEATHED WITH 5/8" PLYWOOD ON ONE SIDE WITH 10d NAILS AT 4"oc AT EDGES AND 12"oc IN FIELD U.N.O.
3. ALL INTERIOR SHEAR WALLS (DEMISING WALLS BETWEEN UNITS) TO BE SHEATHED WITH MIN 1/2" PLYWOOD ON ONE SIDE WITH 10d NAILS AT 4"oc AT EDGES AND 12"oc IN FIELD U.N.O.
4. ALL NAILS ARE ASSUMED TO BE COMMON WIRE NAILS.
5. PROVIDE 1'-0" MIN LAP ONTO WALL STUDS ABOVE FLOOR FRAMING TYPICAL. NO HORIZONTAL PANEL JOINTS AT FLOOR FRAMING.
6. PROVIDE SOLID BLOCKING AT ALL SHEATHING PANEL EDGES TYPICAL. DIMENSIONS SIZE TO MATCH WALL FRAMING.
7. WHERE SHEATHING IS INSTALLED ON BOTH FACES OF WALL, OFFSET VERTICAL PANEL EDGES TO FALL ON DIFFERENT FRAMING MEMBERS.
8. SHEATHING MAY BE INSTALLED HORIZONTAL OR VERTICAL U.N.O.
9. HDx DENOTES HOLD-DOWN LOCATION. SEE SHEET S-001 FOR HOLD-DOWN SCHEDULE.

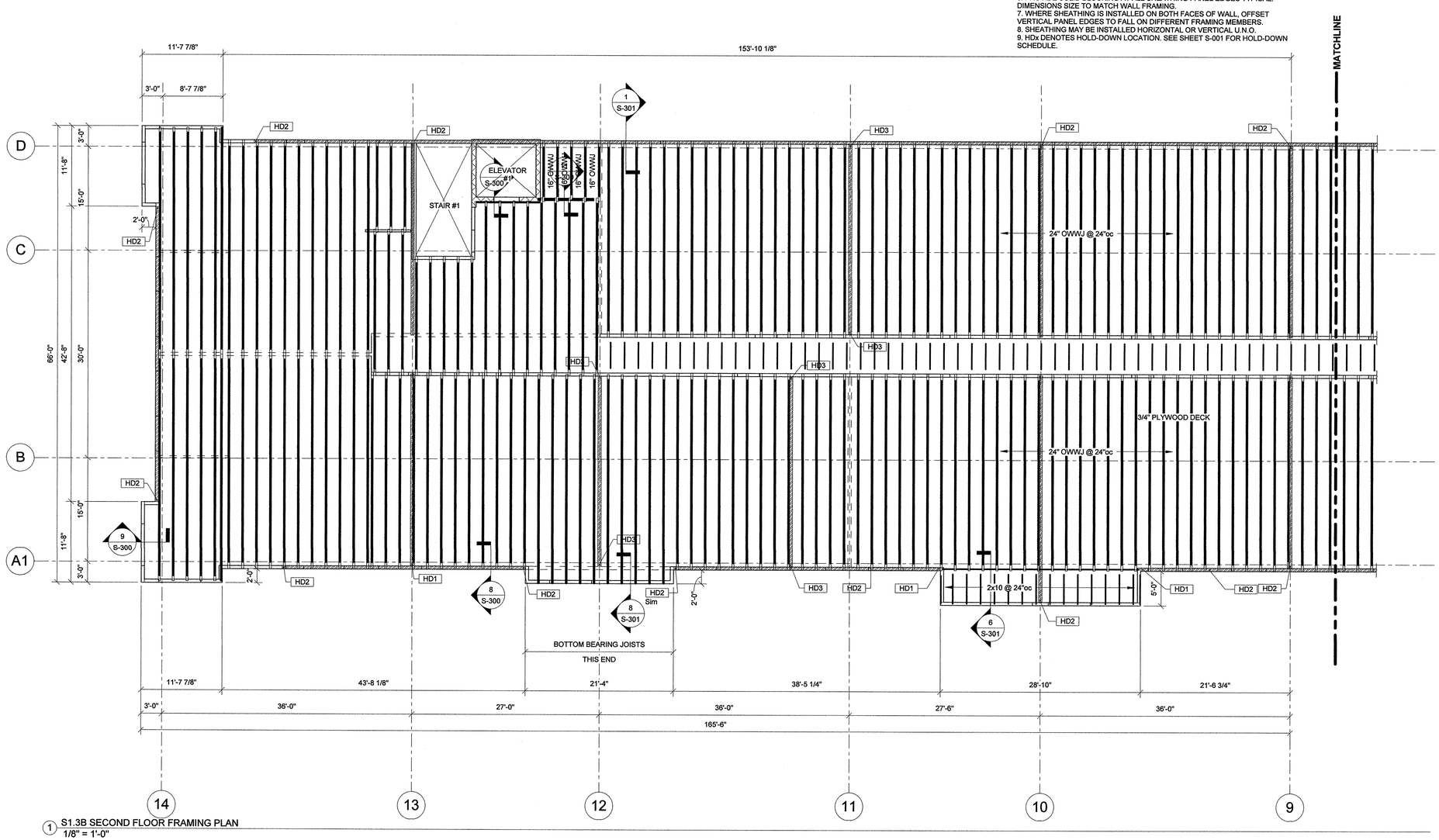

1 S1.3B SECOND FLOOR FRAMING PLAN
1/8" = 1'-0"

Washington Village Phase 1

20 Day Street Building B

Norwalk, CT

Trinity Washington Village Limited Partnership
&
the Norwalk Housing Authority

E-ICON ARCHITECTURE
101 SUMMER ST BOSTON MA 02110
617-451-3333 www.iconarch.com

CONSULTANT

GNCB Consulting Engineers, P.C.
130 ELM STREET
POST OFFICE BOX 802
OLD SAYBROOK
CONNECTICUT 06475
PHONE: 860 388 1224
FAX: 860 388 4613
GNCBENGINEERS.COM

STAMP

STATE OF CONNECTICUT
CHARLES C. BROWN
14390
LICENSED
PROFESSIONAL ENGINEER

MARK	DATE	DESCRIPTION
	09-15-2014	PERMIT/ PRICING
	06-13-2014	PRICING
	11-18-2013	40% CHFA
	09-19-2013	CAM/ SPECIAL PERMIT

PROJECT NO.: 21222 GNCB NO.: 13147
DRAWN BY:
CHECKED BY:

SHEET TITLE

SECOND FLOOR FRAMING PLAN

S-102B

Issue Date C:\Users\GNCB028\Documents\Local Revit\13147 Washington Village Replacement-Norwalk\13147 S14 Washington Village - Building B - Local.rvt

FLOOR SCHEDULE		
MARK	DESCRIPTION	COMMENTS
A	5 " NW CONC W/ 2" COMPOSITE DECK	CONCRETE CONTAINS BARRIER 1
B	3/4" PLYWOOD DECK	

PLAN NOTES:

1. SEE S-001 FOR GENERAL NOTES.
2. SEE S-200 SERIES DWGS FOR TYPICAL DETAILS.
3. ▸——— DENOTES MOMENT CONNECTION.
4. ALL OPEN WEB WOOD JOISTS ARE TOP CHORD BEARING UNO
5. ALL STUD WALLS ARE 2x6s AT 24"oc U.N.O.
6. ▨ AND ▨ INDICATE LINE LOADS ON OPEN WEB JOISTS. FABRICATOR TO INCLUDE LINE LOADS IN JOIST DESIGN.
7. CONCRETE SLABS (ON DECK AND ON GRADE) TO BE REINFORCED WITH ONE LAYER OF 6x6-W2.0xW2.0 WIRE MESH.
8. ALL CMU WALLS ARE 8" CMU REINFORCED WITH #5@48 VERT U.N.O.

SHEAR WALL NOTES:

1. ▨ DENOTES SHEAR WALL.
2. ALL EXTERIOR SHEAR WALLS TO BE SHEATHED WITH 5/8" PLYWOOD ON ONE SIDE WITH 10d NAILS AT 4"oc AT EDGES AND 12"oc IN FIELD U.N.O.
3. ALL INTERIOR SHEAR WALLS (DEMISING WALLS BETWEEN UNITS) TO BE SHEATHED WITH MIN 1/2" PLYWOOD ON ONE SIDE WITH 10d NAILS AT 4"oc AT EDGES AND 12"oc IN FIELD U.N.O.
4. ALL NAILS ARE ASSUMED TO BE COMMON WIRE NAILS.
5. PROVIDE 1'-0" MIN LAP ONTO WALL STUDS ABOVE FLOOR FRAMING TYPICAL. NO HORIZONTAL PANEL JOINTS AT FLOOR FRAMING.
6. PROVIDE SOLID BLOCKING AT ALL SHEATHING PANEL EDGES TYPICAL. DIMENSIONS SIZE TO MATCH WALL FRAMING.
7. WHERE SHEATHING IS INSTALLED ON BOTH FACES OF WALL, OFFSET VERTICAL PANEL EDGES TO FALL ON DIFFERENT FRAMING MEMBERS.
8. SHEATHING MAY BE INSTALLED HORIZONTAL OR VERTICAL U.N.O.
9. HDx DENOTES HOLD-DOWN LOCATION. SEE SHEET S-001 FOR HOLD-DOWN SCHEDULE.

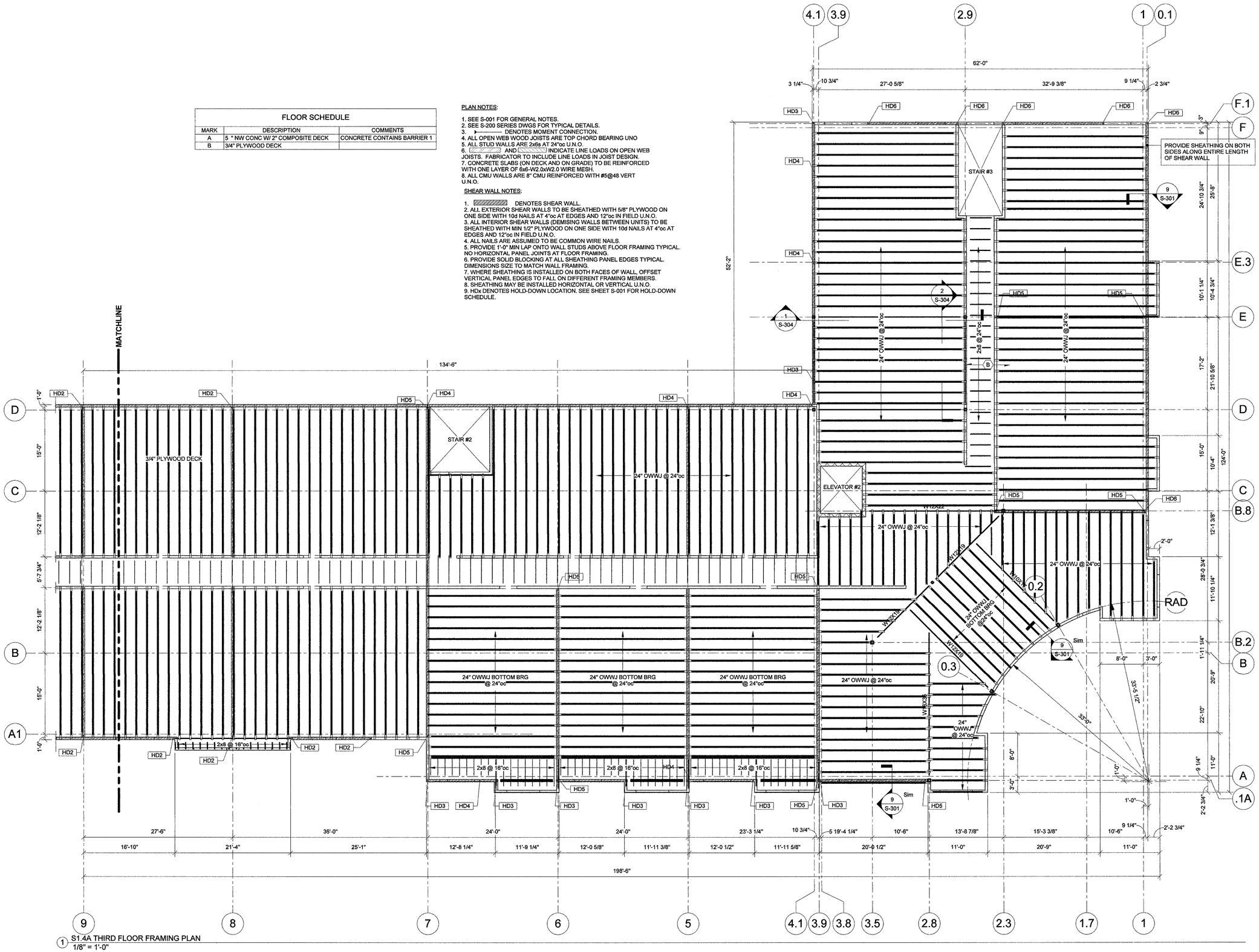

1 S1.4A THIRD FLOOR FRAMING PLAN
1/8" = 1'-0"

Washington Village Phase 1

20 Day Street Building B

Norwalk, CT

Trinity Washington Village Limited Partnership
&
the Norwalk Housing Authority

E-ICON ARCHITECTURE
101 SUMMER ST BOSTON MA 02110
617-451-3333 www.iconarch.com

CONSULTANT

GNCB Consulting Engineers, P.C.
130 ELM STREET
POST OFFICE BOX 802
OLD SAYBROOK
CONNECTICUT 06475
PHONE: 860 388 1224
FAX: 860 388 4613
GNCBENGINEERS.COM

STAMP

STATE OF CONNECTICUT · JESSE C. BROWN · 21390 · LICENSED PROFESSIONAL ENGINEER

MARK	DATE	DESCRIPTION
	09-15-2014	PERMIT/ PRICING
	06-13-2014	PRICING
	11-18-2013	40% CHFA
	09-19-2013	CAM/ SPECIAL PERMIT

PROJECT NO.: 21222 | GNCB NO.: 13147
DRAWN BY:
CHECKED BY:

SHEET TITLE

THIRD FLOOR FRAMING PLAN

S-103A

Issue Date C:\Users\GNCB02\Documents\Local Revit\13147 Washington Village Replacement-Norwalk\13147 S14 Washington Village - Building B - Local.rvt

FLOOR SCHEDULE		
MARK	DESCRIPTION	COMMENTS
A	5 " NW CONC W/ 2" COMPOSITE DECK	CONCRETE CONTAINS BARRIER 1
B	3/4" PLYWOOD DECK	

PLAN NOTES:

1. SEE S-001 FOR GENERAL NOTES.
2. SEE S-200 SERIES DWGS FOR TYPICAL DETAILS.
3. ⊢ DENOTES MOMENT CONNECTION.
4. ALL OPEN WEB WOOD JOISTS ARE TOP CHORD BEARING UNO
5. ALL STUD WALLS ARE 2x6s AT 24"oc U.N.O.
6. ▨ AND ▨ INDICATE LINE LOADS ON OPEN WEB JOISTS. FABRICATOR TO INCLUDE LINE LOADS IN JOIST DESIGN.
7. CONCRETE SLABS (ON DECK AND ON GRADE) TO BE REINFORCED WITH ONE LAYER OF 6x6-W2.0xW2.0 WIRE MESH.
8. ALL CMU WALLS ARE 8" CMU REINFORCED WITH #5@48 VERT U.N.O.

SHEAR WALL NOTES:

1. ▨ DENOTES SHEAR WALL.
2. ALL EXTERIOR SHEAR WALLS TO BE SHEATHED WITH 5/8" PLYWOOD ON ONE SIDE WITH 10d NAILS AT 4"oc AT EDGES AND 12"oc IN FIELD U.N.O.
3. ALL INTERIOR SHEAR WALLS (DEMISING WALLS BETWEEN UNITS) TO BE SHEATHED WITH MIN 1/2" PLYWOOD ON ONE SIDE WITH 10d NAILS AT 4"oc AT EDGES AND 12"oc IN FIELD U.N.O.
4. ALL NAILS ARE ASSUMED TO BE COMMON WIRE NAILS.
5. PROVIDE 1'-0" MIN LAP ONTO WALL STUDS ABOVE FLOOR FRAMING TYPICAL. NO HORIZONTAL PANEL JOINTS AT FLOOR FRAMING.
6. PROVIDE SOLID BLOCKING AT ALL SHEATHING PANEL EDGES TYPICAL. DIMENSIONS SIZE TO MATCH WALL FRAMING.
7. WHERE SHEATHING IS INSTALLED ON BOTH FACES OF WALL, OFFSET VERTICAL PANEL EDGES TO FALL ON DIFFERENT FRAMING MEMBERS.
8. SHEATHING MAY BE INSTALLED HORIZONTAL OR VERTICAL U.N.O.
9. HDx DENOTES HOLD-DOWN LOCATION. SEE SHEET S-001 FOR HOLD-DOWN SCHEDULE.

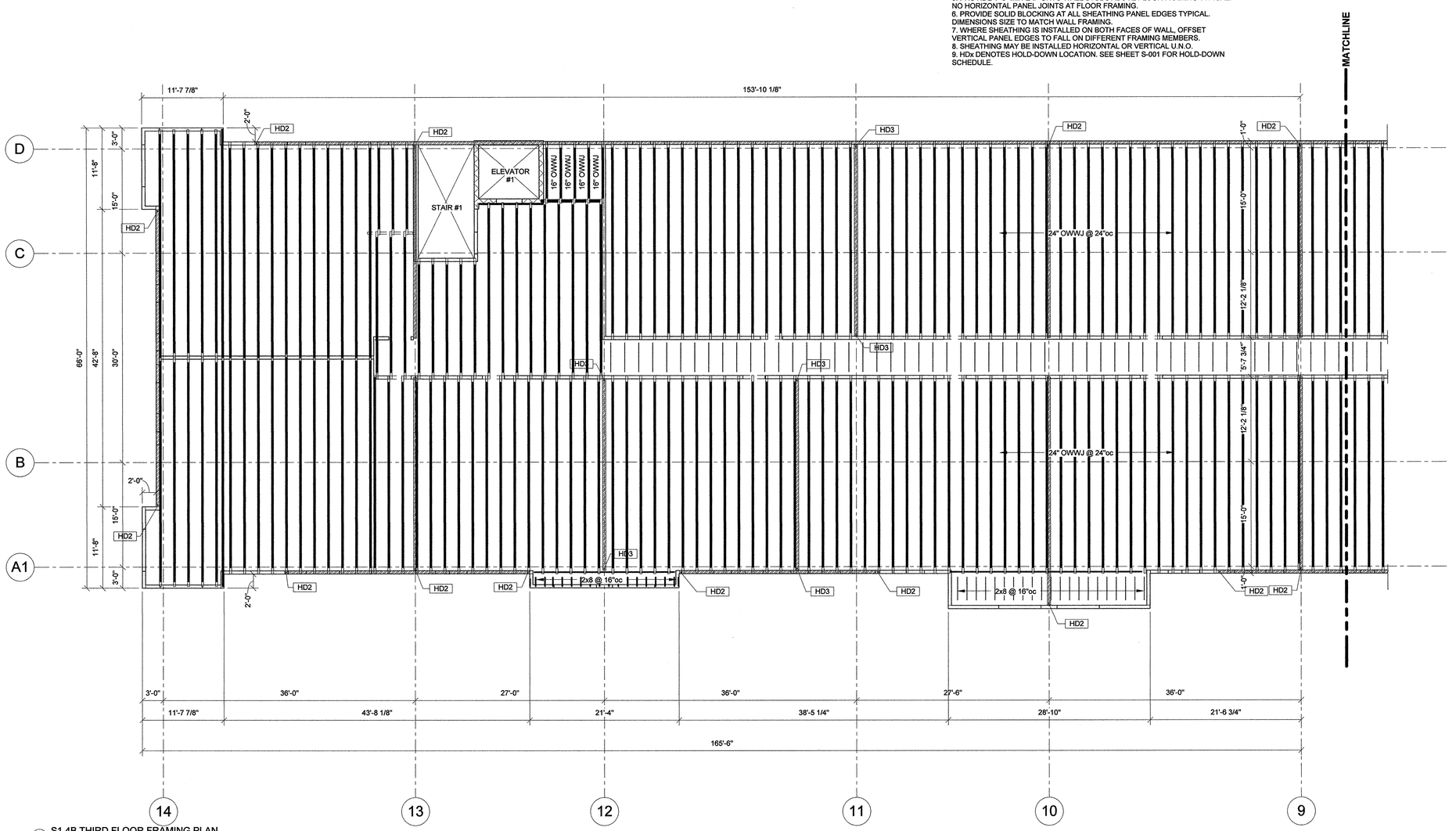

1 S1.4B THIRD FLOOR FRAMING PLAN
1/8" = 1'-0"

Washington Village Phase 1

20 Day Street Building B

Norwalk, CT

Trinity Washington Village Limited Partnership
&
the Norwalk Housing Authority

E-ICON ARCHITECTURE
101 SUMMER ST BOSTON MA 02110
617-451-3333 www.iconarch.com

CONSULTANT

GNCB Consulting Engineers, P.C.
130 ELM STREET
POST OFFICE BOX 802
OLD SAYBROOK
CONNECTICUT 06475
PHONE: 860 388 1224
FAX: 860 388 4613
GNCBENGINEERS.COM

STAMP

STATE OF CONNECTICUT · CHARLES C. BROWN · LICENSED PROFESSIONAL ENGINEER

MARK	DATE	DESCRIPTION
	09-15-2014	PERMIT/ PRICING
	06-13-2014	PRICING
	11-18-2013	40% CHFA
	09-19-2013	CAM/ SPECIAL PERMIT

PROJECT NO.: 21222 | GNCB NO.: 13147
DRAWN BY:
CHECKED BY:

SHEET TITLE

THIRD FLOOR FRAMING PLAN

S-103B

Issue Date C:\Users\GNCB028\Documents\Local Revit\13147 Washington Village Replacement-Norwalk\13147 S14 Washington Village - Building B - Local.rvt

FLOOR SCHEDULE		
MARK	DESCRIPTION	COMMENTS
A	5 " NW CONC W/ 2" COMPOSITE DECK	CONCRETE CONTAINS BARRIER 1
B	3/4" PLYWOOD DECK	

LINE LOADS

	DL (PLF)	SL (PLF)
L4.1:	331	260
L4.2:	132	0
L4.3:	423	380
L4.4:	376	319
L4.5:	296	214
L4.6:	132	0
L4.7:	232	130
L4.8:	175	85
L4.9:	374	344
L4.10:	590	626

PLAN NOTES:

1. SEE S-001 FOR GENERAL NOTES.
2. SEE S-200 SERIES DWGS FOR TYPICAL DETAILS.
3. ——► DENOTES MOMENT CONNECTION.
4. ALL OPEN WEB WOOD JOISTS ARE TOP CHORD BEARING UNO
5. ALL STUD WALLS ARE 2x6s AT 24"oc U.N.O.
6. [▨] AND [▨] INDICATE LINE LOADS ON OPEN WEB JOISTS. FABRICATOR TO INCLUDE LINE LOADS IN JOIST DESIGN.
7. CONCRETE SLABS (ON DECK AND ON GRADE) TO BE REINFORCED WITH ONE LAYER OF 6x6-W2.0xW2.0 WIRE MESH.
8. ALL CMU WALLS ARE 8" CMU REINFORCED WITH #5@48 VERT U.N.O.

SHEAR WALL NOTES:

1. [▨] DENOTES SHEAR WALL.
2. ALL EXTERIOR SHEAR WALLS TO BE SHEATHED WITH 5/8" PLYWOOD ON ONE SIDE WITH 10d NAILS AT 4"oc AT EDGES AND 12"oc IN FIELD U.N.O.
3. ALL INTERIOR SHEAR WALLS (DEMISING WALLS BETWEEN UNITS) TO BE SHEATHED WITH MIN 1/2" PLYWOOD ON ONE SIDE WITH 10d NAILS AT 4"oc AT EDGES AND 12"oc IN FIELD U.N.O.
4. ALL NAILS ARE ASSUMED TO BE COMMON WIRE NAILS.
5. PROVIDE 1'-0" MIN LAP ONTO WALL STUDS ABOVE FLOOR FRAMING TYPICAL. NO HORIZONTAL PANEL JOINTS AT FLOOR FRAMING.
6. PROVIDE SOLID BLOCKING AT ALL SHEATHING PANEL EDGES TYPICAL. DIMENSIONS SIZE TO MATCH WALL FRAMING.
7. WHERE SHEATHING IS INSTALLED ON BOTH FACES OF WALL, OFFSET VERTICAL PANEL EDGES TO FALL ON DIFFERENT FRAMING MEMBERS.
8. SHEATHING MAY BE INSTALLED HORIZONTAL OR VERTICAL U.N.O.
9. HDx DENOTES HOLD-DOWN LOCATION. SEE SHEET S-001 FOR HOLD-DOWN SCHEDULE.

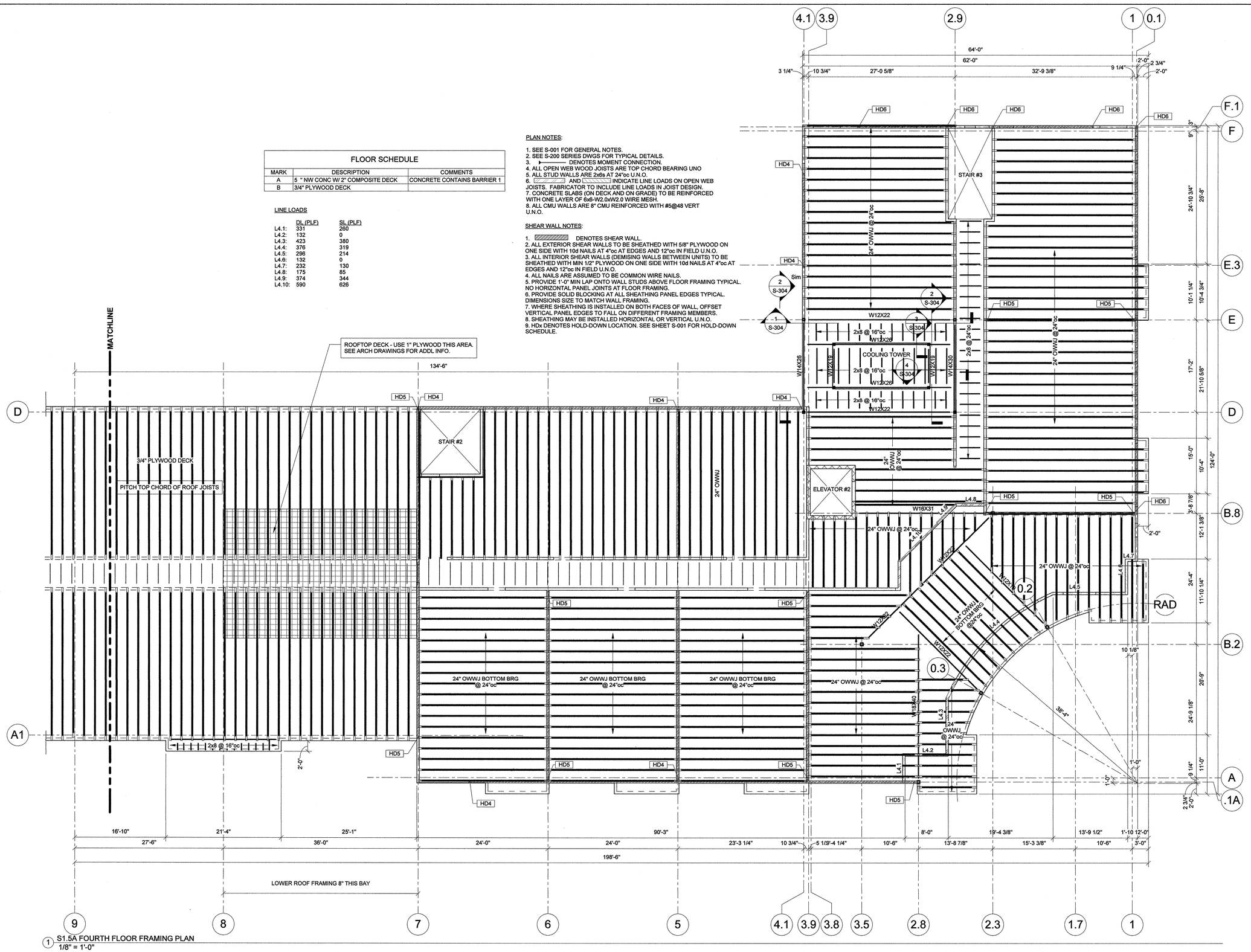

1 S1.5A FOURTH FLOOR FRAMING PLAN
1/8" = 1'-0"

Washington Village Phase 1

20 Day Street Building B

Norwalk, CT

Trinity Washington Village Limited Partnership
&
the Norwalk Housing Authority

E-ICON ARCHITECTURE
101 SUMMER ST BOSTON MA 02110
617-451-3333 www.iconarch.com

CONSULTANT

GNCB Consulting Engineers, P.C.
130 ELM STREET
POST OFFICE BOX 802
OLD SAYBROOK
CONNECTICUT 06475
PHONE: 860 388 1224
FAX: 860 388 4613
GNCBENGINEERS.COM

STAMP

STATE OF CONNECTICUT · CHARLES C. BROWN · LICENSED PROFESSIONAL ENGINEER

MARK	DATE	DESCRIPTION
	09-15-2014	PERMIT/ PRICING
	06-13-2014	PRICING
	11-18-2013	40% CHFA
	09-19-2013	CAM/ SPECIAL PERMIT

PROJECT NO.: 21222	GNCB NO.: 13147
DRAWN BY:	
CHECKED BY:	

SHEET TITLE

FOURTH FLOOR FRAMING PLAN

S-104A

Issue Date C:\Users\GNCB028\Documents\Local Revit\13147 Washington Village Replacement-Norwalk\13147 S14 Washington Village - Building B - Local.rvt

FLOOR SCHEDULE		
MARK	DESCRIPTION	COMMENTS
A	5 " NW CONC W/ 2" COMPOSITE DECK	CONCRETE CONTAINS BARRIER 1
B	3/4" PLYWOOD DECK	

PLAN NOTES:

1. SEE S-001 FOR GENERAL NOTES.
2. SEE S-200 SERIES DWGS FOR TYPICAL DETAILS.
3. ⊢—— DENOTES MOMENT CONNECTION.
4. ALL OPEN WEB WOOD JOISTS ARE TOP CHORD BEARING UNO
5. ALL STUD WALLS ARE 2x6s AT 24"oc U.N.O.
6. [ ] AND [ ] INDICATE LINE LOADS ON OPEN WEB JOISTS. FABRICATOR TO INCLUDE LINE LOADS IN JOIST DESIGN.
7. CONCRETE SLABS (ON DECK AND ON GRADE) TO BE REINFORCED WITH ONE LAYER OF 6x6-W2.0xW2.0 WIRE MESH.
8. ALL CMU WALLS ARE 8" CMU REINFORCED WITH #5@48 VERT U.N.O.

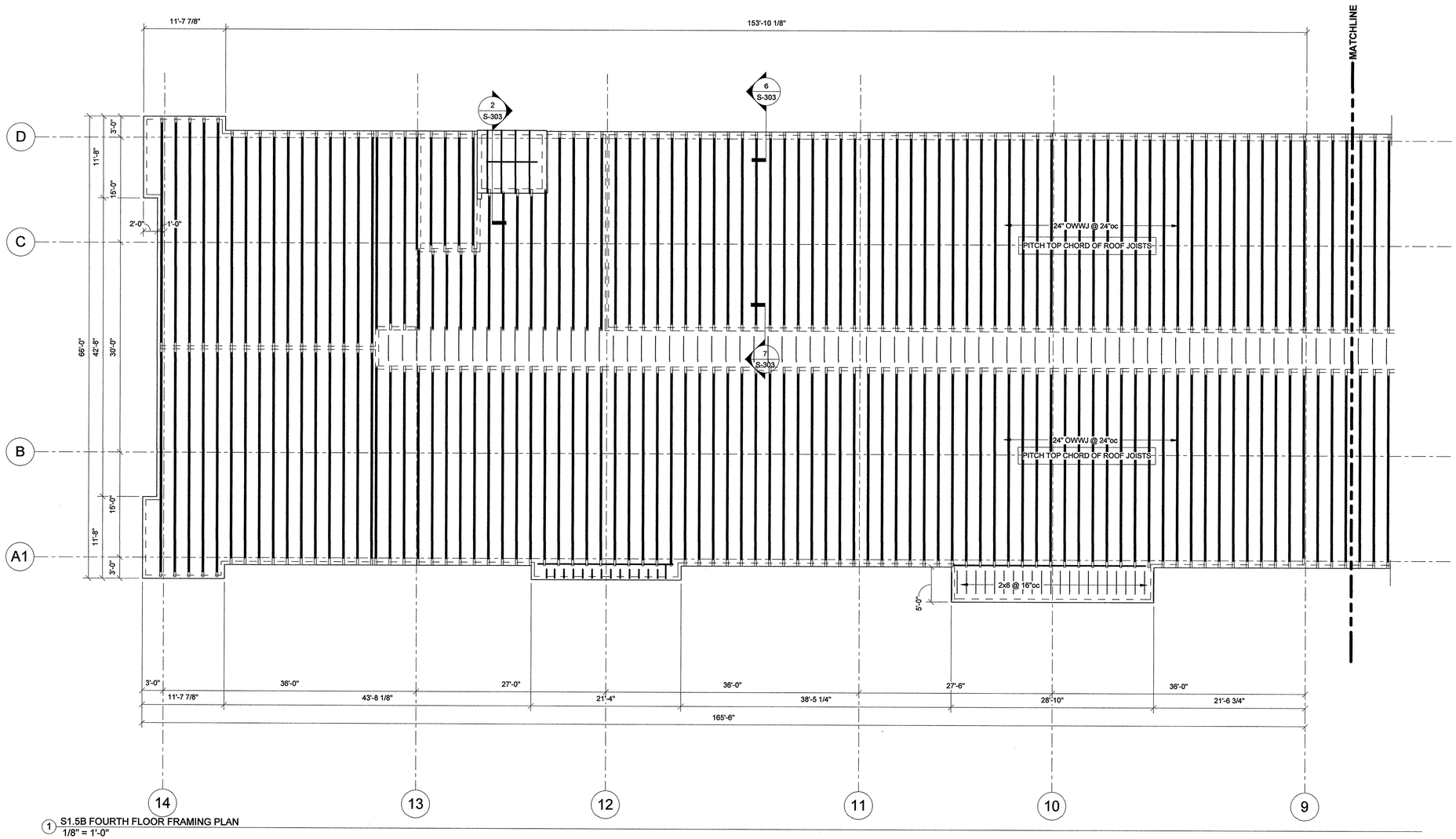

1 S1.5B FOURTH FLOOR FRAMING PLAN
1/8" = 1'-0"

Washington Village Phase 1

20 Day Street Building B

Norwalk, CT

Trinity Washington Village Limited Partnership
&
the Norwalk Housing Authority

E-ICON ARCHITECTURE
101 SUMMER ST BOSTON MA 02110
617-451-3333 www.iconarch.com

CONSULTANT

GNCB Consulting Engineers, P.C.
130 ELM STREET
POST OFFICE BOX 802
OLD SAYBROOK
CONNECTICUT 06475
PHONE: 860 388 1224
FAX: 860 388 4613
GNCBENGINEERS.COM

STAMP

STATE OF CONNECTICUT · CHARLES G. BROWN · LICENSED PROFESSIONAL ENGINEER

MARK	DATE	DESCRIPTION
	09-15-2014	PERMIT/ PRICING
	06-13-2014	PRICING
	11-18-2013	40% CHFA
	09-19-2013	CAM/ SPECIAL PERMIT

PROJECT NO.: 21222 | GNCB NO.: 13147
DRAWN BY:
CHECKED BY:

SHEET TITLE

FOURTH FLOOR FRAMING PLAN

S-104B

Issue Date C:\Users\GNCB226\Documents\Local Revit\13147 Washington Village Replacement-Norwalk\13147 S14 Washington Village - Building B - Local.rvt

FLOOR SCHEDULE		
MARK	DESCRIPTION	COMMENTS
A	5 " NW CONC W/ 2" COMPOSITE DECK	CONCRETE CONTAINS BARRIER 1
B	3/4" PLYWOOD DECK	

PLAN NOTES:

1. SEE S-001 FOR GENERAL NOTES.
2. SEE S-200 SERIES DWGS FOR TYPICAL DETAILS.
3. ⊢—— DENOTES MOMENT CONNECTION.
4. ALL OPEN WEB WOOD JOISTS ARE TOP CHORD BEARING UNO
5. ALL STUD WALLS ARE 2x6s AT 24"oc U.N.O.
6. ▭ AND ▭ INDICATE LINE LOADS ON OPEN WEB JOISTS. FABRICATOR TO INCLUDE LINE LOADS IN JOIST DESIGN.
7. CONCRETE SLABS (ON DECK AND ON GRADE) TO BE REINFORCED WITH ONE LAYER OF 6x6-W2.0xW2.0 WIRE MESH.
8. ALL CMU WALLS ARE 8" CMU REINFORCED WITH #5@48 VERT U.N.O.

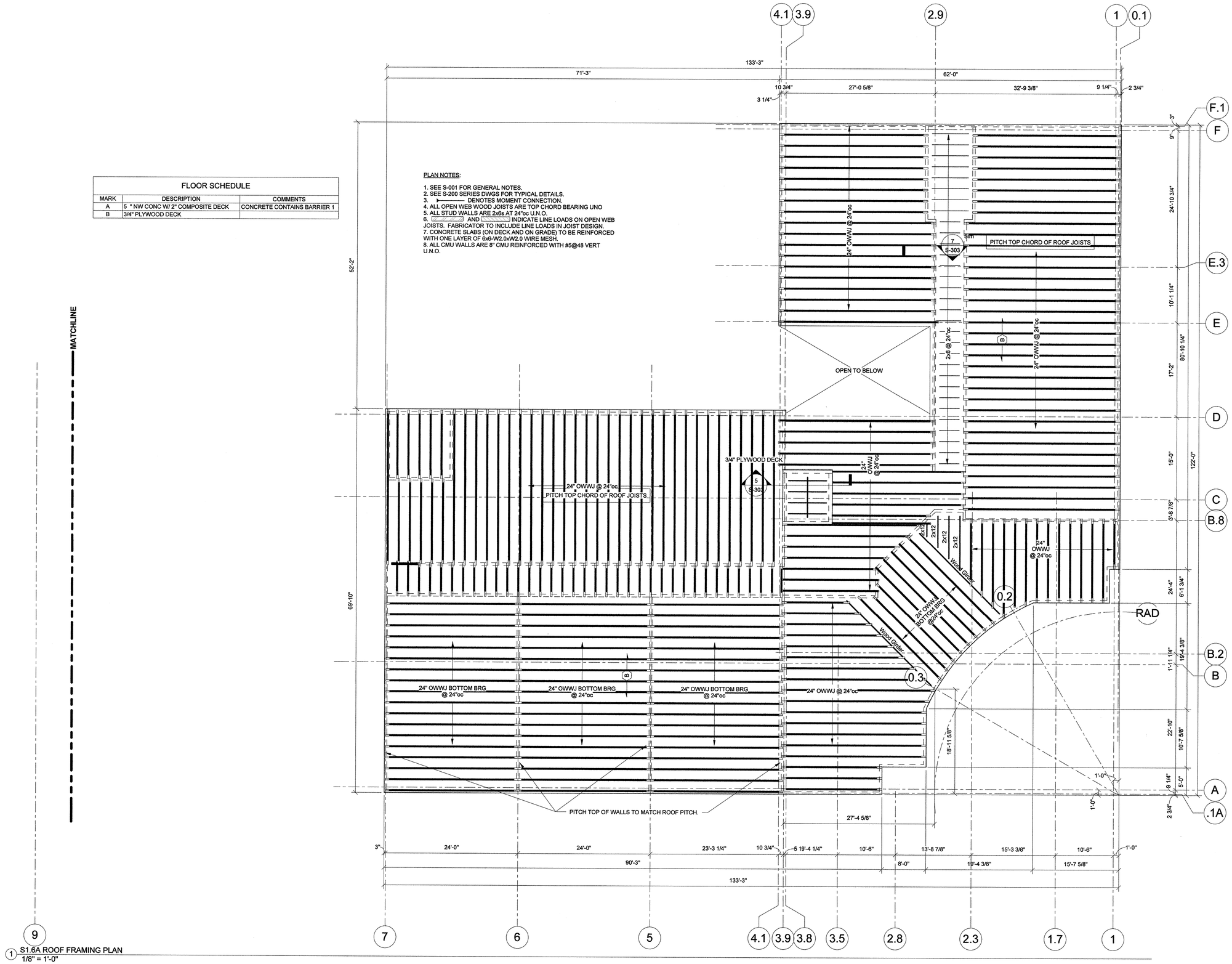

1 S1.6A ROOF FRAMING PLAN
1/8" = 1'-0"

Washington Village Phase 1

20 Day Street Building B

Norwalk, CT

Trinity Washington Village Limited Partnership
&
the Norwalk Housing Authority

E-ICON ARCHITECTURE
101 SUMMER ST BOSTON MA 02110
617-451-3333 www.iconarch.com

CONSULTANT

GNCB Consulting Engineers, P.C.
130 ELM STREET
POST OFFICE BOX 802
OLD SAYBROOK
CONNECTICUT 06475
PHONE: 860 388 1224
FAX: 860 388 4613
GNCBENGINEERS.COM

STAMP

STATE OF CONNECTICUT · CHARLES C. BROWN · 14390 · LICENSED PROFESSIONAL ENGINEER

MARK	DATE	DESCRIPTION
	09-15-2014	PERMIT/ PRICING
	06-13-2014	PRICING
	11-18-2013	40% CHFA
	09-19-2013	CAM/ SPECIAL PERMIT

PROJECT NO.: 21222 GNCB NO.: 13147
DRAWN BY:
CHECKED BY:

SHEET TITLE

ROOF FRAMING PLAN

S-105A

Issue Date C:\Users\GNCB028\Documents\Local Revit\13147 Washington Village Replacement-Norwalk\13147 S14 Washington Village - Building B - Local.rvt

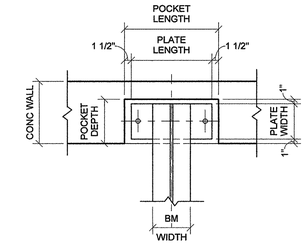

PLAN DETAIL - BEAM 90° TO WALL

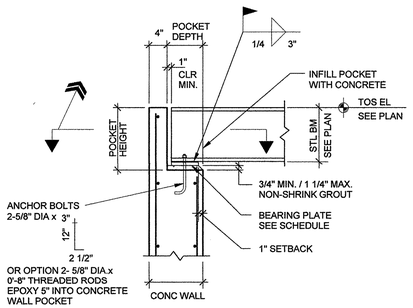

NOTE: BEARING PLATES TO BE SET SLOPED WITH STEEL BEAMS

TYPICAL BEAM BEARING DETAIL

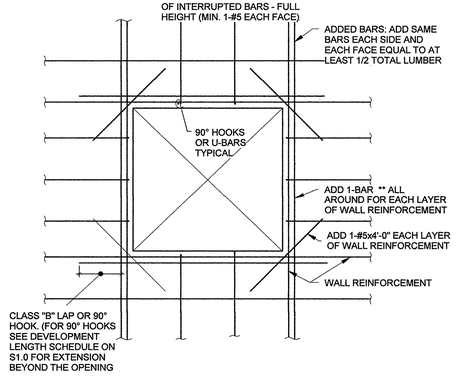

NOTES:
1. START HORIZONTAL AND VERTICAL BARS 1 1/2" CLEAR OF THE EDGE OF OPENING
2. ** BAR SIZE IS ONE SIZE LARGER THAN TYPICAL REINFORCEMENT IN LAYER.

TYPICAL CONCRETE WALL OPENING REINFORCEMENT DETAIL

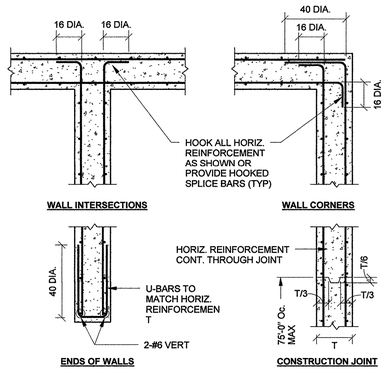

TYPICAL CONCRETE WALL REINF DETIAL - WALLS 10" THICK OR MORE

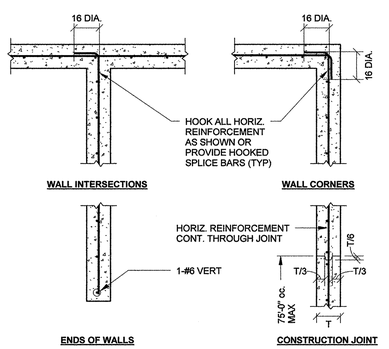

TYPICAL CONCRETE WALL REINFORCING DETAIL - WALLS LESS THAN 10" THICK

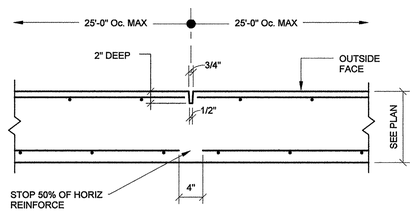

CONTRACTION JOINT DETAIL

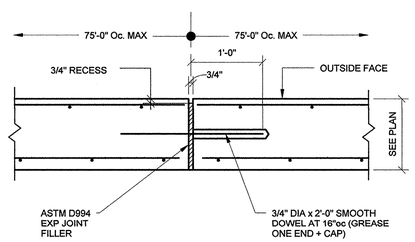

EXPANSION JOINT DETAIL

TYPICAL RETAINING WALL JOINT DETAILS

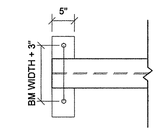

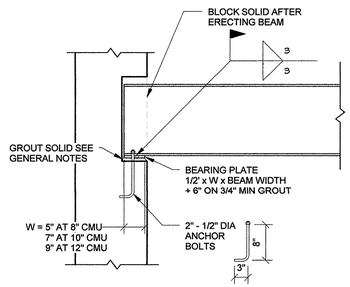

TYPICAL BEAM BEARING AT MASONRY

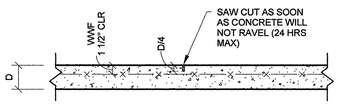

TYPICAL SLAB ON GRADE CONTROL JOINT DETAIL

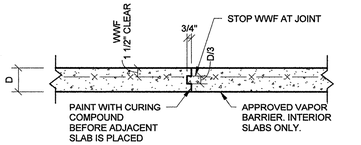

TYPICAL SLAB ON GRADE CONSTRUCTION JOINT DETAIL

Washington Village Phase 1

20 Day Street Building B

Norwalk, CT

Trinity Washington Village Limited Partnership
&
the Norwalk Housing Authority

E-ICON ARCHITECTURE
101 SUMMER ST BOSTON MA 02110
617-451-3333 www.iconarch.com

CONSULTANT

GNCB Consulting Engineers, P.C.
130 ELM STREET
POST OFFICE BOX 802
OLD SAYBROOK
CONNECTICUT 06475
PHONE: 860 388 1224
FAX: 860 388 4613
GNCBENGINEERS.COM

STAMP

STATE OF CONNECTICUT CHARLES C. BROWN 19390 LICENSED PROFESSIONAL ENGINEER

MARK	DATE	DESCRIPTION
	09-15-2014	PERMIT/ PRICING
	06-13-2014	PRICING
	11-18-2013	40% CHFA
	09-19-2013	CAM/ SPECIAL PERMIT

PROJECT NO.: 21222 | GNCB NO.: 13147
DRAWN BY:
CHECKED BY:

SHEET TITLE

TYPICAL DETAILS

S-200

Issue Date C:\Users\GNCB2028\Documents\Local Revit\13147 Washington Village Replacement-Norwalk13147 S14 Washington Village - Building B - Local.rvt

BRICK AND BLOCK WALLS LOOSE LINTEL SCHEDULE			
OPENING WIDTH	LINTEL SIZE	BEARING EACH END	REMARKS
3'-6 OR LESS	L-3 1/2 x 3 1/2 x 1/4	4"	SLV
OVER 3'-6" THRU 5'-6"	L-4 x 3 1/2 x 1/4	6"	LLV
OVER 5'-6" THRU 7'-6"	L-6 x 3 1/2 x 5/16	6"	LLV
OVER 7'-6" THRU 9'-6"	L-6 x 3 1/2 x 3/8	6"	LLV
OVER 9'-6" THRU 12'-6"	W8x15 AND PL-5/16 x WALL "T"-1"	8"	SEE NOTES 3 AND 4

NOTES:

1. WHERE ANGLE LINTELS ARE REQUIRED, PROVIDE ONE ANGLE FOR EACH 4" OR LESS THICKNESS OF MASONRY.
2. FOR OPENINGS OVER 6'-0, PROVIDE SOLID MASONRY JAMB UNDER LINTEL EACH SIDE OF OPENING.
3. PLATE = OPENING WIDTH ONLY. FILLET WELD PLATE 2" AT 12"oc EA SIDE (STAGGERED) TO BOTTOM FLANGE.
4. FOR OPENINGS OVER 10'-0", PROVIDE 1-5/8" DIA x 1'-6 ANCH BOLT EACH END.
5. SEE PLANS AND SECTIONS FOR SPECIAL STEEL LINTELS AND REINFORCED CMU LINTELS

CMU WALL / SHEARWALL LINTEL SCHEDULE		
OPENING WIDTH	8" CMU	12" CMU
3'-6" OR LESS	8"Wx8"D WITH 2-#4 BTM.	12"Wx8"D WITH 2-#5 BTM.
OVER 3'-6" THRU 5'-6"	8"Wx16"D WITH 2-#4 TOP & BTM.	12"Wx16"D WITH 2-#5 TOP & BTM.
OVER 5'-6" THRU 7'-6"	8"Wx16"D WITH 2-#5 TOP & BTM. WITH #3 STIRRUPS AT 16"oc	12"Wx16"D WITH 2-#5 TOP & BTM. WITH #3 STIRRUPS AT 16" oc
OVER 7'-6" THRU 9'-6"	8"Wx24"D WITH 2-#5 TOP & BTM. WITH #3 STIRRUPS AT 16"oc	12"Wx24"D WITH 2-#5 TOP & BTM. WITH #3 STIRRUPS AT 16" oc

NOTES:

1. MIN. END BEARING = 24"
2. CONT. WALL REINF THRU BOND BEAM ENDS.
3. ALL BOND BEAM CELLS TO BE GROUTED SOLID (TYP.)

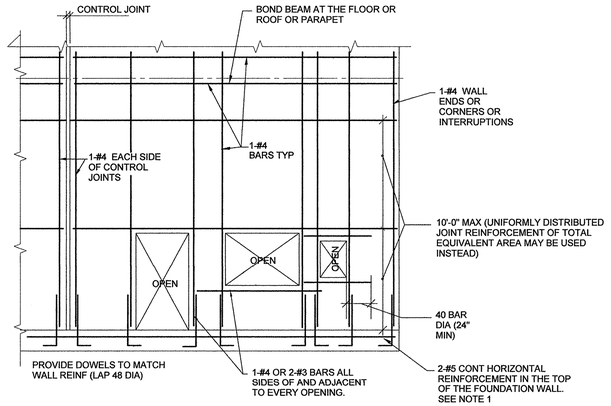

ELEVATION

NOTES:

1. AT INTERIOR PART IONS WHERE NO FOUNDATION IS PRESENT PROVIDE BOND BEAM AT BOTTOM OF WALL WITH 1-#4 OR 2-#3 CONT TYPICAL.
2. PROVIDE 48 BAR DIA LAPS WHERE REQUIRED.

MINIMUM MASONRY WALL REINFORCING DETAIL

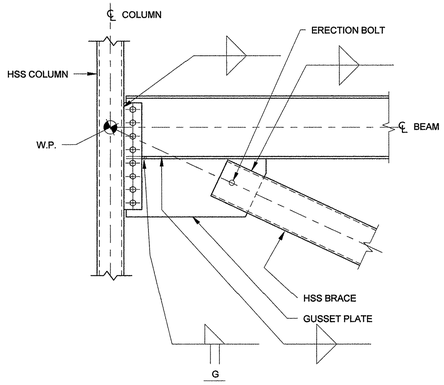

BRACE CONNECTION TO COLUMN

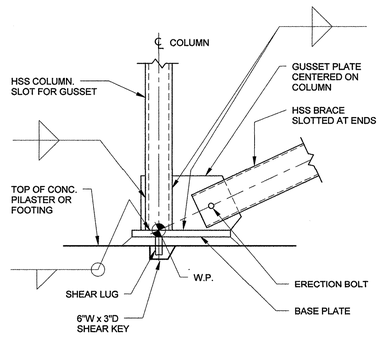

BASE CONNECTION TO COLUMN

NOTE:
ANCHOR RODS NOT SHOWN FOR CLARITY

NOTES:
1. FOR BRACING CONNECTION DESIGN LOADS, SEE BRACED FRAME ELEVATIONS ABOVE. LOADS ARE UNFACTORED LOADS.
2. ALL FILLET WELDS TO HOLLOW STRUCTURAL SECTIONS TO BE DESIGNED FOR 1/16" LESS EFFECTIVE THROAT THAN THE SIZE SPECIFIED TO ACCOUNT FOR GAPS CREATED BY DISTORTION OF TUBES DURING SLOTTING OPERATIONS (EXAMPLE: REQUIRED WELD SIZE OF 3/16" SHALL BE SPECIFIED AS 1/4").
3. SHEAR LAG EFFECTS SHALL BE CONSIDERED IN THE DESIGN OF WELDED CONNECTIONS BETWEEN HOLLOW STRUCTURAL SECTIONS AND GUSSET PLATES. LENGTH OF EACH WELD SHALL NOT BE LESS THAN THE MAXIMUM DIMENSION (WIDTH OR DEPTH) OF THE CONNECTED BRACE.
4. DESIGN CONNECTIONS FOR UNFACTORED AXIAL AND GRAVITY LOADS SHOWN.
5. REFER TO PLANS FOR BRACE FRAME LOCATIONS.

TYPICAL BRACED FRAME CONNECTION DETAIL

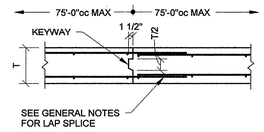

CONSTRUCTION JOINT DETAIL

TYPICAL WALL CONSTRUCTION JOINT DETAIL

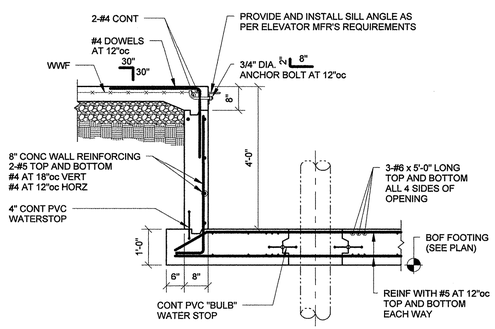

TYPICAL ELEVATOR PIT DETAIL

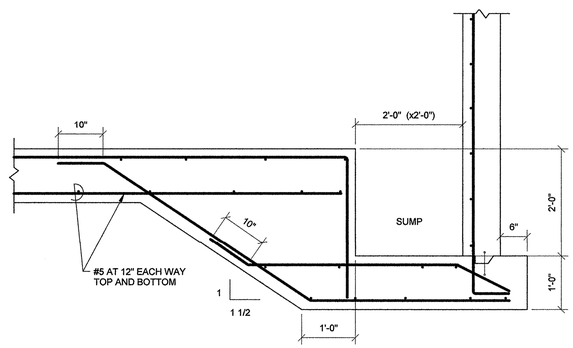

ELEVATOR SUMP PIT DETAIL

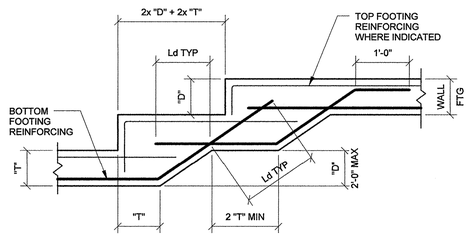

TYPICAL STEPPED WALL FOOTING DETAIL

NOTE:
Ld- INDICATES BAR DEVELOPMENT LENGTH.
REFER TO SCHEDULE FOR LENGTH.

TYPICAL STEPPED WALL FOOTING

Washington Village Phase 1

20 Day Street Building B

Norwalk, CT

Trinity Washington Village Limited Partnership
&
the Norwalk Housing Authority

E-ICON ARCHITECTURE
101 SUMMER ST BOSTON MA 02110
617-451-3333 www.iconarch.com

CONSULTANT

GNCB Consulting Engineers, P.C.
130 ELM STREET
POST OFFICE BOX 802
OLD SAYBROOK
CONNECTICUT 06475
PHONE: 860 388 1224
FAX: 860 388 4613
GNCBENGINEERS.COM

STAMP

STATE OF CONNECTICUT CHARLES C. BROWN 24990 LICENSED PROFESSIONAL ENGINEER

MARK	DATE	DESCRIPTION
	09-15-2014	PERMIT/ PRICING
	06-13-2014	PRICING
	11-18-2013	40% CHFA
	09-19-2013	CAM/ SPECIAL PERMIT

PROJECT NO.: 21222 GNCB NO.: 13147
DRAWN BY:
CHECKED BY:

SHEET TITLE

TYPICAL DETAILS

S-201

Issue Date C:\Users\GNCB228\Documents\Local Revit\13147 Washington Village Replacement-Norwalk\13147 S14 Washington Village - Building B - Local.rvt

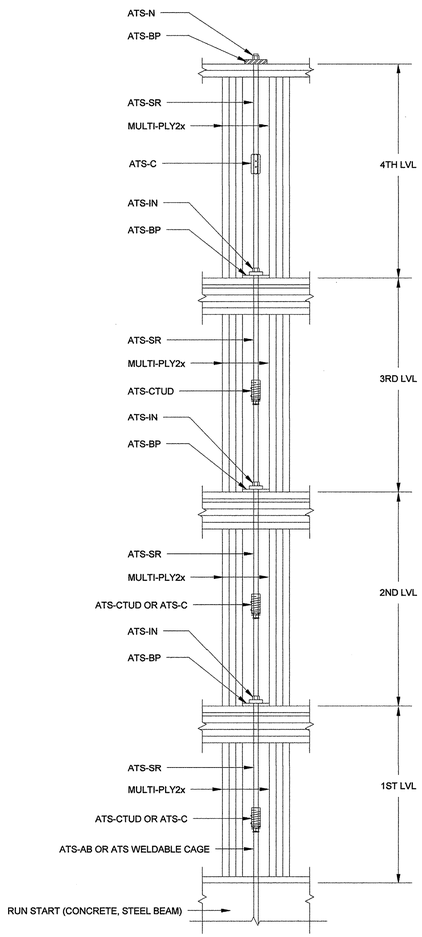

ATS ELEVATION

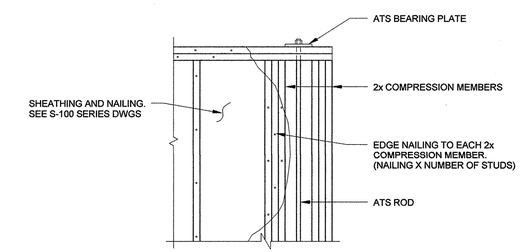

TOP PLATE DETAIL

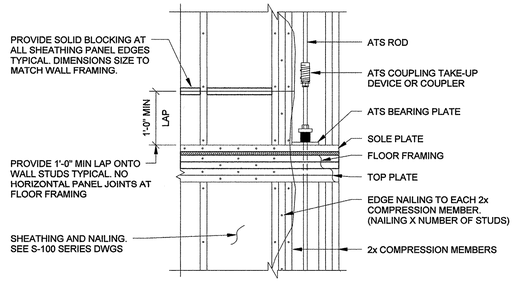

MID FLOOR DETAIL

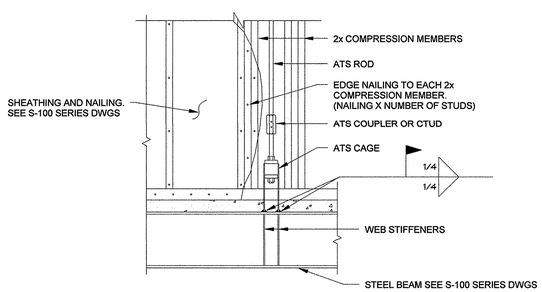

STEEL BEAM DETAIL

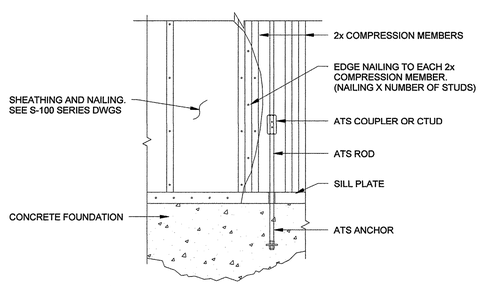

CONCRETE DETAIL

TYPICAL ANCHOR TIEDOWN SYSTEM (ATS) DETAILS

Washington Village Phase 1

20 Day Street Building B

Norwalk, CT

Trinity Washington Village Limited Partnership
&
the Norwalk Housing Authority

E-ICON ARCHITECTURE
101 SUMMER ST BOSTON MA 02110
617-451-3333 www.iconarch.com

CONSULTANT

GNCB Consulting Engineers, P.C.
130 ELM STREET
POST OFFICE BOX 802
OLD SAYBROOK
CONNECTICUT 06475
PHONE: 860 388 1224
FAX: 860 388 4613
GNCBENGINEERS.COM

STAMP



MARK	DATE	DESCRIPTION
	09-15-2014	PERMIT/ PRICING
	06-13-2014	PRICING
	11-18-2013	40% CHFA
	09-19-2013	CAM/ SPECIAL PERMIT

PROJECT NO.: 21222 | GNCB NO.: 13147
DRAWN BY:
CHECKED BY:

SHEET TITLE

TYPICAL DETAILS

S-202

Issue Date C:\Users\GNCB028\Documents\Local Revit\13147 Washington Village Replacement-Norwalk\13147 S14 Washington Village - Building B - Local.rvt

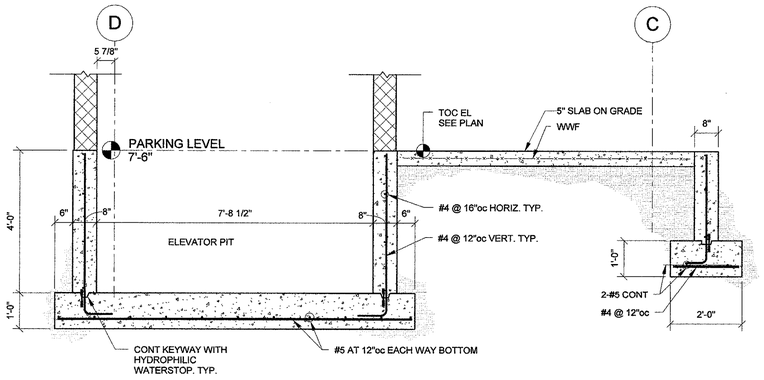

3 SECTION @ ELEVATOR #1 PIT
1/2" = 1'-0"

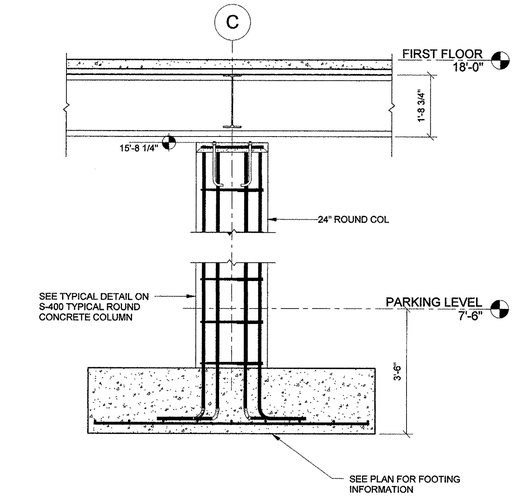

2 SECTION @ PARKING CONC COL
1/2" = 1'-0"

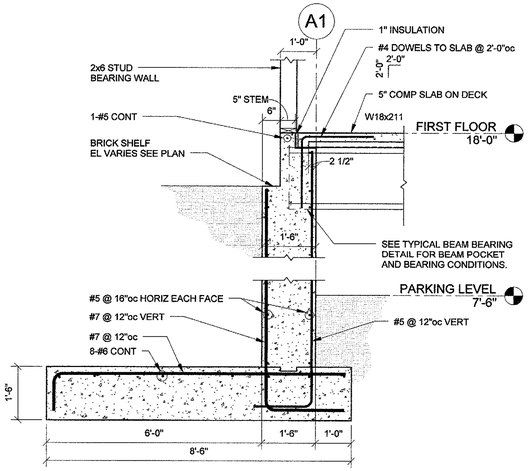

1 SECTION @ FND WALL ON A1
1/2" = 1'-0"

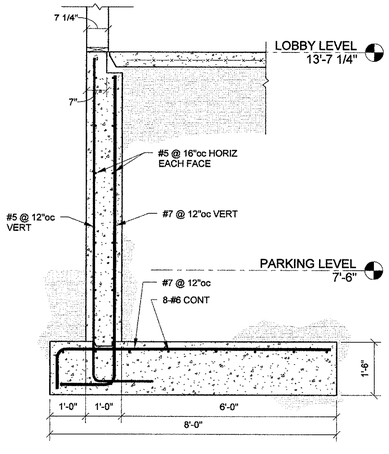

7 SECTION @ FND WALL ON LINE 4
1/2" = 1'-0"

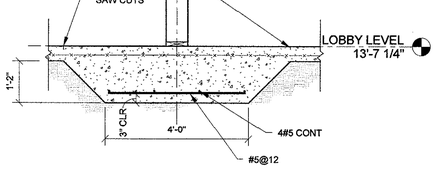

6 SECTION @ WALL FOOTING ON LINE 2.9
1/2" = 1'-0"

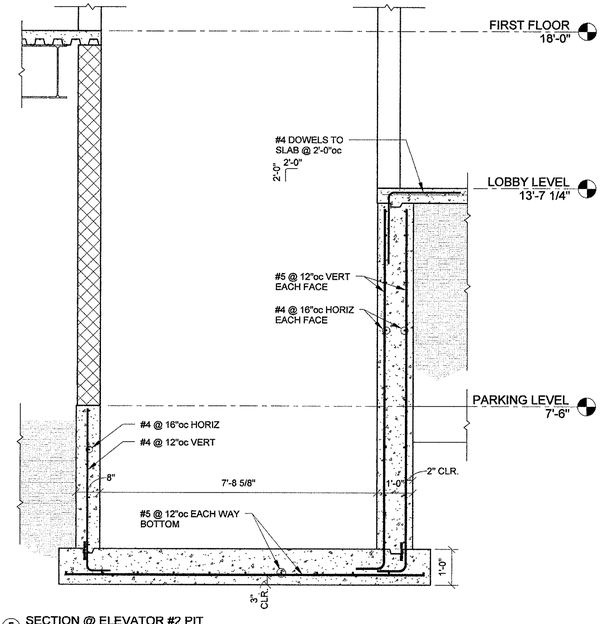

5 SECTION @ ELEVATOR #2 PIT
1/2" = 1'-0"

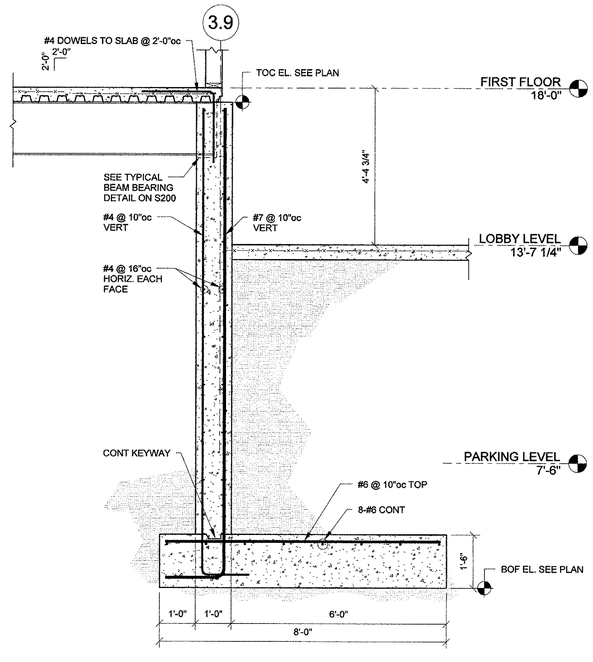

4 SECTION @ RETAINING WALLS ON 3.9
1/2" = 1'-0"

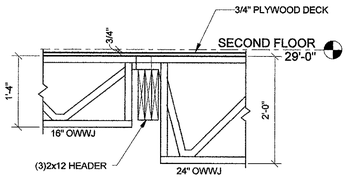

11 SECTION @ JOISTS BEARING ON HEADER
3/4" = 1'-0"

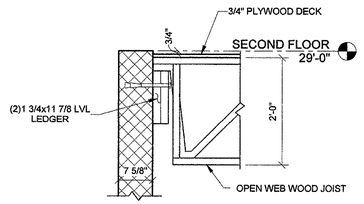

10 SECTION @ JOIST SUPPORT ON CMU WALL
3/4" = 1'-0"

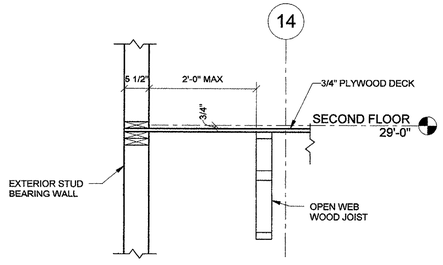

9 SECTION @ JOIST PARALLEL TO EXT WALL
3/4" = 1'-0"

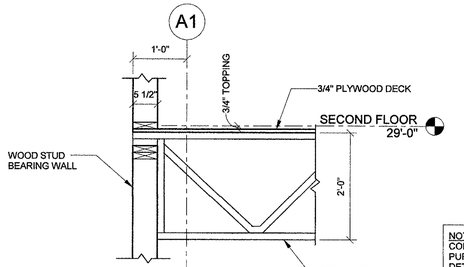

8 SECTION @ JOIST BEARING ON EXTERIOR WALL
3/4" = 1'-0"

NOTE: OPEN WEB WOOD JOIST (OWWJ) CONFIGURATIONS SHOWN ARE FOR GRAPHICAL PURPOSES ONLY. ACTUAL CONFIGURATION TO BE DETERMINED BY THE MANUFACTURER. ALL WORK RELATED TO JOIST CONFIGURATIONS INCLUDING SUPPORT CONDITIONS AND M/E/P ROUTING SHOULD BE COORDINATED WITH APPROVED OWWJ SHOP DRAWINGS.

Washington Village Phase 1

20 Day Street Building B

Norwalk, CT

Trinity Washington Village Limited Partnership
&
the Norwalk Housing Authority

E-ICON ARCHITECTURE
101 SUMMER ST BOSTON MA 02110
617-451-3333 www.iconarch.com

CONSULTANT
GNCB Consulting Engineers, P.C.
130 ELM STREET
POST OFFICE BOX 802
OLD SAYBROOK
CONNECTICUT 06475
PHONE: 860 388 1224
FAX: 860 388 4613
GNCBENGINEERS.COM

STAMP

STATE OF CONNECTICUT
JAMES E. GIBBS
LICENSED
PROFESSIONAL ENGINEER

MARK	DATE	DESCRIPTION
	09-15-2014	PERMIT/ PRICING
	06-13-2014	PRICING
	11-18-2013	40% CHFA
	09-19-2013	CAM/ SPECIAL PERMIT

PROJECT NO.: 21222 | GNCB NO.: 13147
DRAWN BY:
CHECKED BY:

SHEET TITLE

SECTIONS AND DETAILS

S-300

Issue Date C:\Users\GNCB2\2\Documents\Local Revit\13147 Washington Village Replacement-Norwalk13147 S14 Washington Village - Building B - Local.rvt

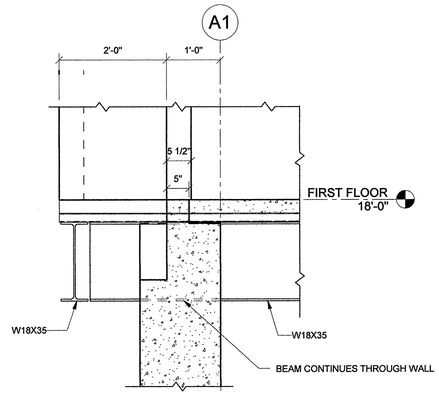

SECTION @ 1ST FL END CANTILEVER ON A1
3 3/4" = 1'-0"

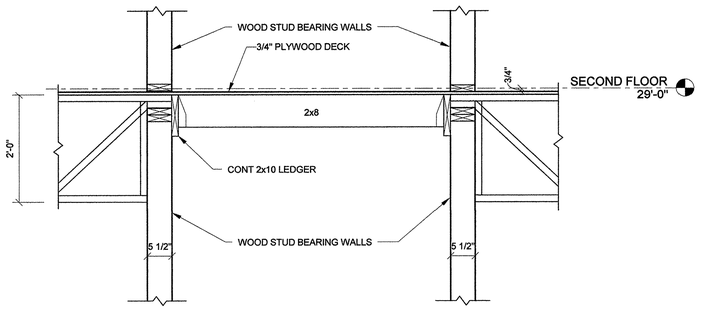

SECTION @ MAIN CORRIDOR WALLS
2 3/4" = 1'-0"

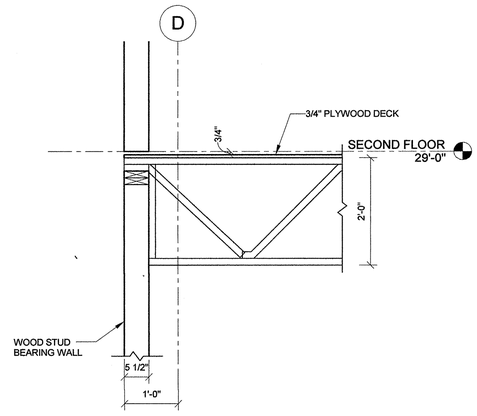

SECTION @ 2ND FL CANTILEVER ON LINE D
1 3/4" = 1'-0"

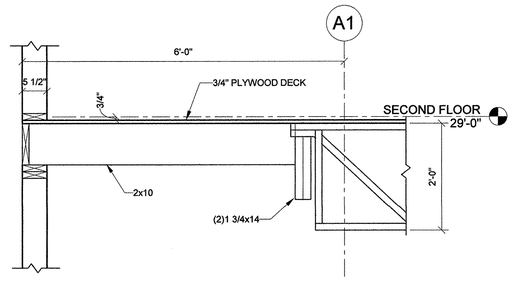

SECTION @ 2ND FL EXTENDED BAY
6 3/4" = 1'-0"

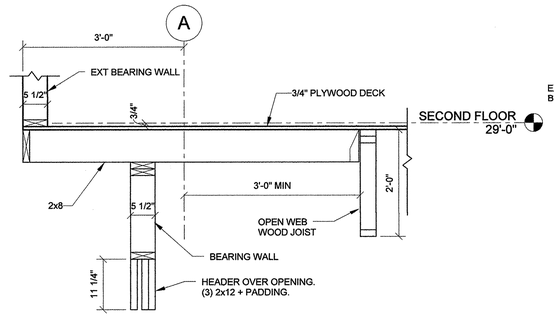

SECTION @ 2ND FL CANTILEVER ON A
5 3/4" = 1'-0"

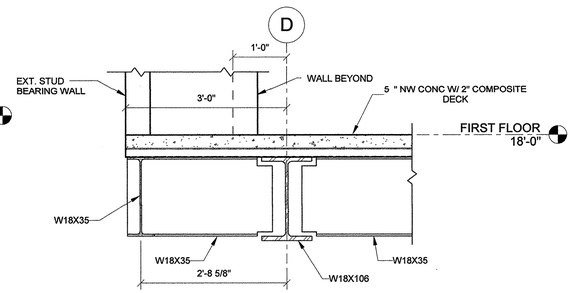

SECTION @ 1SR FL CANTILEVER ON D
4 3/4" = 1'-0"

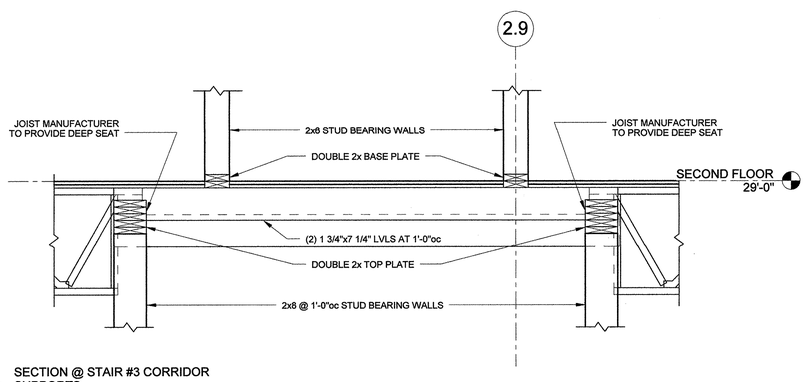

SECTION @ STAIR #3 CORRIDOR SUPPORTS
10 3/4" = 1'-0"

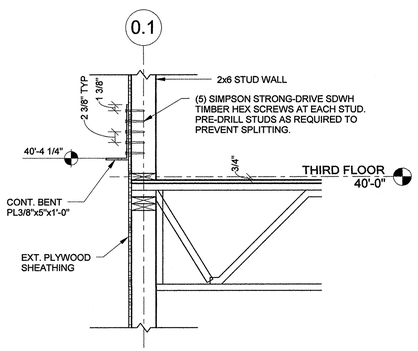

SECTION @ 3RD FL RELIEVING ANGLE
9 3/4" = 1'-0"

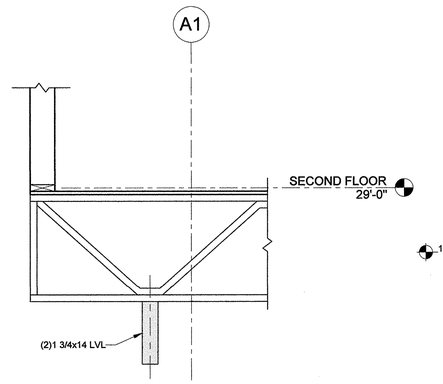

SECTION @ SECOND FLOOR CANTILEVER ON A1
8 3/4" = 1'-0"

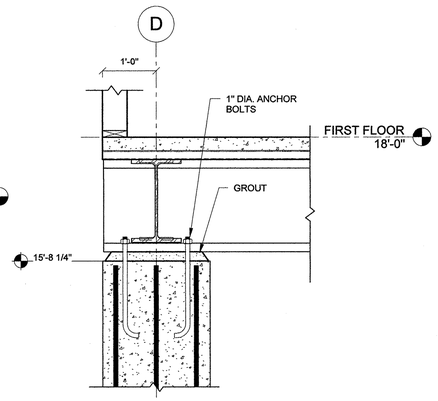

SECTION AT GIRDER SUPPORTS ON LINE D
7 3/4" = 1'-0"

NOTE: OPEN WEB WOOD JOIST (OWWJ) CONFIGURATIONS SHOWN ARE FOR GRAPHICAL PURPOSES ONLY. ACTUAL CONFIGURATION TO BE DETERMINED BY THE MANUFACTURER. ALL WORK RELATED TO JOIST CONFIGURATIONS INCLUDING SUPPORT CONDITIONS AND M/E/P ROUTING SHOULD BE COORDINATED WITH APPROVED OWWJ SHOP DRAWINGS.

Washington Village Phase 1

20 Day Street Building B

Norwalk, CT

Trinity Washington Village Limited Partnership
&
the Norwalk Housing Authority

E-ICON ARCHITECTURE
101 SUMMER ST BOSTON MA 02110
617-451-3333 www.iconarch.com

CONSULTANT

GNCB Consulting Engineers, P.C.
130 ELM STREET
POST OFFICE BOX 802
OLD SAYBROOK
CONNECTICUT 06475
PHONE: 860 388 1224
FAX: 860 388 4613
GNCBENGINEERS.COM

STAMP



MARK	DATE	DESCRIPTION
	09-15-2014	PERMIT/ PRICING
	06-13-2014	PRICING
	11-18-2013	40% CHFA
	09-19-2013	CAM/ SPECIAL PERMIT

PROJECT NO.: 21222 | GNCB NO.: 13147
DRAWN BY:
CHECKED BY:

SHEET TITLE

SECTIONS AND DETAILS

S-301

Issue Date C:\Users\GNCB028\Documents\Local Revit\13147 Washington Village Replacement-Norwalk\13147 S14 Washington Village - Building B - Local.rvt

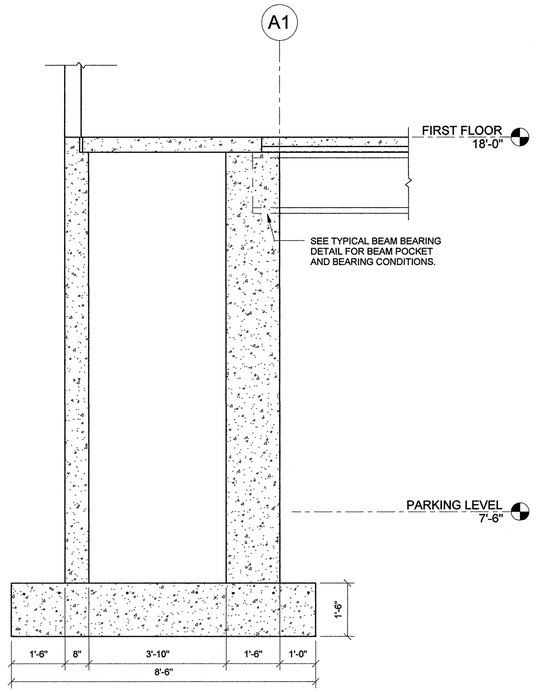

4 SECTION @ FND FOR BUMP OUT ON LINE A1
1/2" = 1'-0"

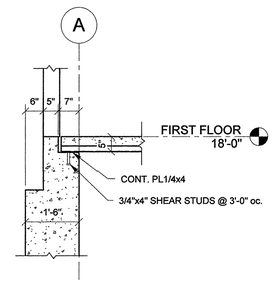

2 SECTION @ METAL DECK TO FND WALL ON LINE A
1/2" = 1'-0"

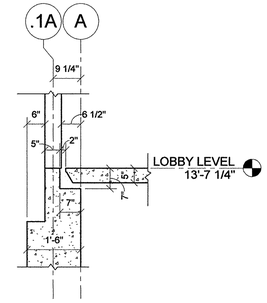

1 SECTION @ LOBBY FND WALL LINE A
1/2" = 1'-0"

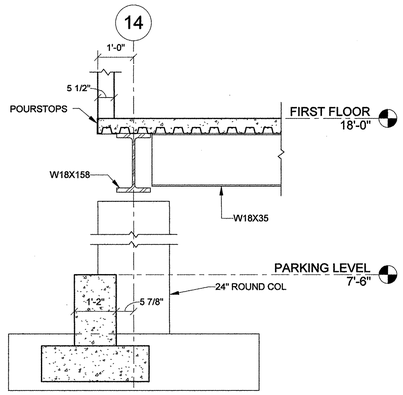

7 SECTION @ FND LINE 14
1/2" = 1'-0"

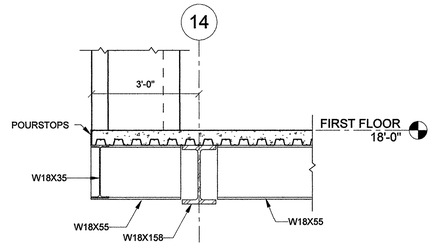

6 SECTION @ FIRST FL CORNER CANT ON LINE 14
1/2" = 1'-0"

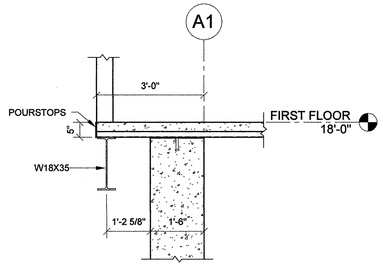

5 SECTION @ FND WALL AT CORNER CANT. LINE A1
1/2" = 1'-0"

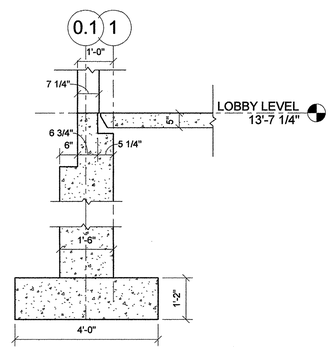

11 SECTION @ FND WALL ON LINE 1
1/2" = 1'-0"

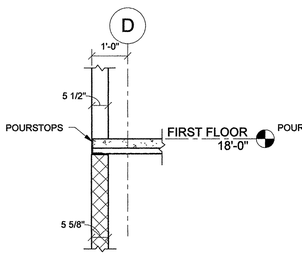

10 SECTION @ FIRST FL AT STAIR 2
1/2" = 1'-0"

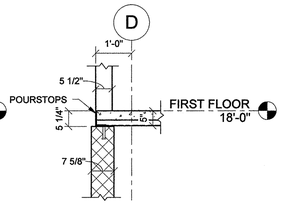

9 SECTION @ FIRST FL AT STAIR 1
1/2" = 1'-0"

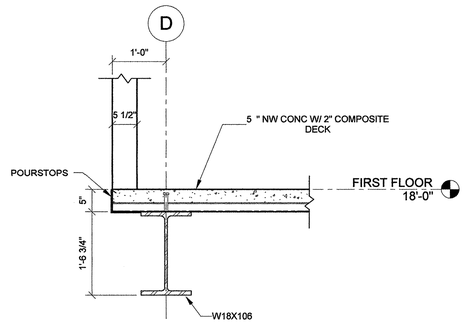

8 SECTION @ FIRST FLOOR ON LINE D
3/4" = 1'-0"

Washington Village Phase 1

20 Day Street Building B

Norwalk, CT

Trinity Washington Village Limited Partnership
&
the Norwalk Housing Authority

E-ICON ARCHITECTURE
101 SUMMER ST BOSTON MA 02110
617-451-3333 www.iconarch.com

CONSULTANT

GNCB Consulting Engineers, P.C.
130 ELM STREET
POST OFFICE BOX 802
OLD SAYBROOK
CONNECTICUT 06475
PHONE: 860 388 1224
FAX: 860 388 4613
GNCBENGINEERS.COM

STAMP



MARK	DATE	DESCRIPTION
	09-15-2014	PERMIT/ PRICING
	06-13-2014	PRICING
	11-18-2013	40% CHFA
	09-19-2013	CAM/ SPECIAL PERMIT

PROJECT NO.: 21222 | GNCB NO.: 13147
DRAWN BY:
CHECKED BY:

SHEET TITLE

SECTIONS AND DETAILS

S-302

Issue Date C:\Users\GNCB028\Documents\Local Revit\13147 Washington Village Replacement-Norwalk\13147 S14 Washington Village - Building B - Local.rvt

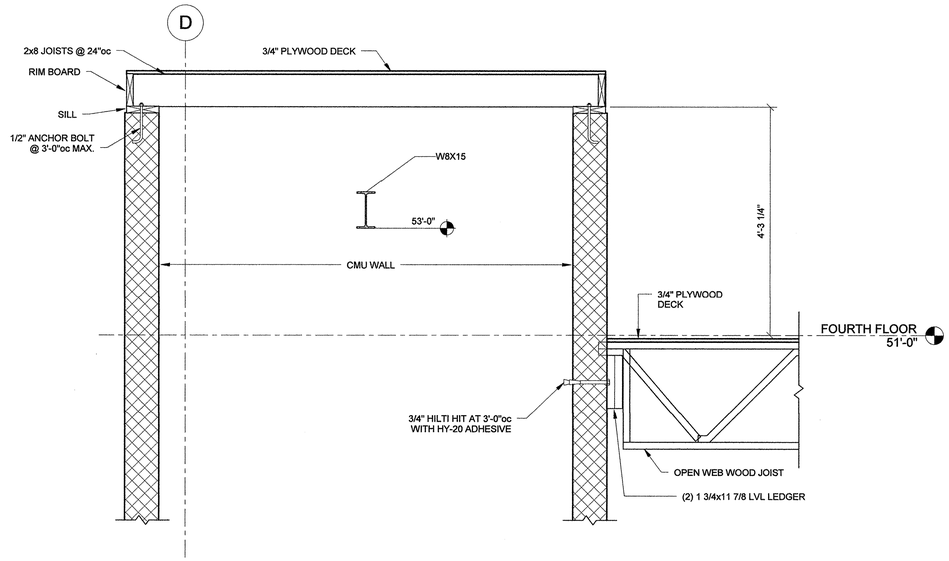

2 SECTION @ ELEVATOR #1 ROOF
3/4" = 1'-0"

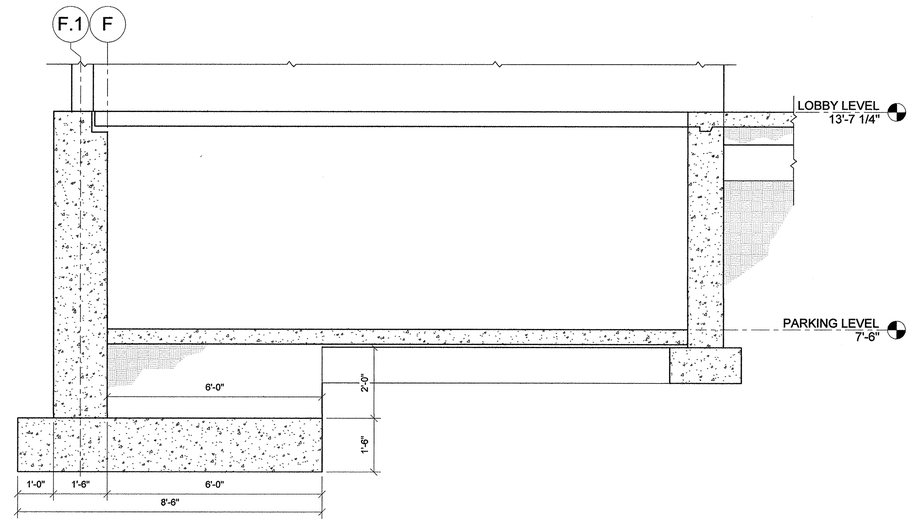

1 SECTION @ STAIR #3
1/2" = 1'-0"

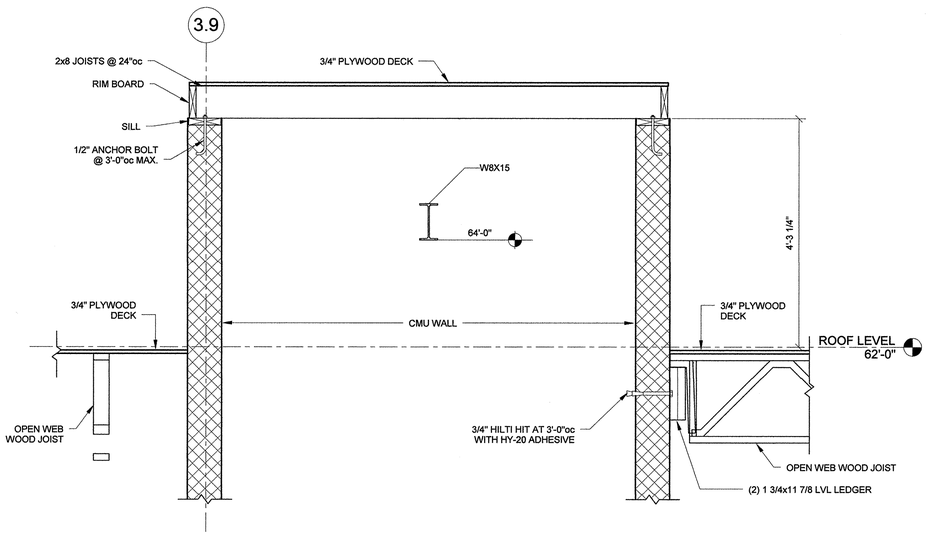

5 SECTION @ ELEVATOR #2 ROOF
3/4" = 1'-0"

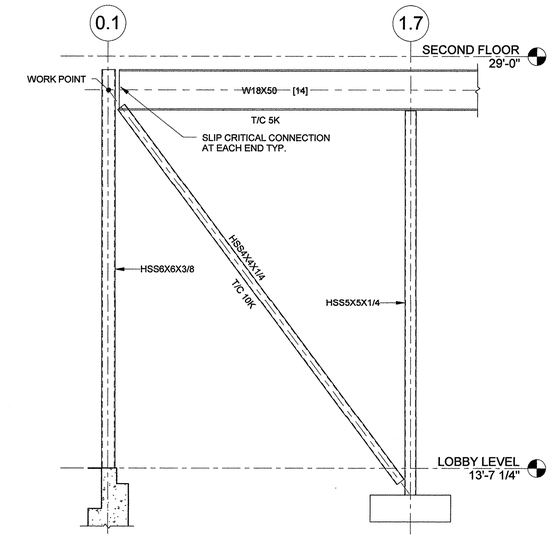

3 SECTION @ BRACING ON LINE B.8
3/8" = 1'-0"

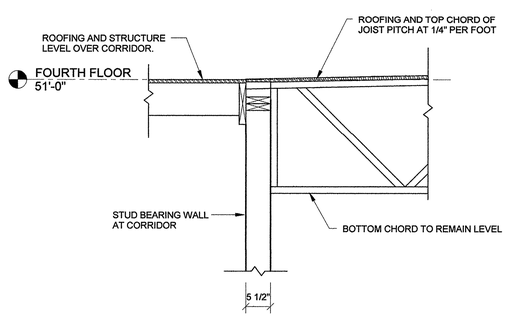

7 SECTION @ PITCHED ROOF JOIST AT CORRIDOR
3/4" = 1'-0"

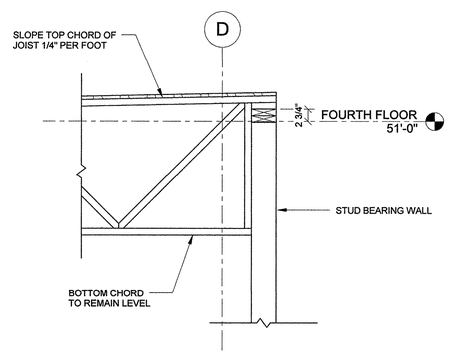

6 SECTION @ PITCHED ROOF JOIST AT EXT WALL
3/4" = 1'-0"

Washington Village Phase 1

20 Day Street Building B

Norwalk, CT

Trinity Washington Village Limited Partnership
&
the Norwalk Housing Authority

E-ICON ARCHITECTURE
101 SUMMER ST BOSTON MA 02110
617-451-3333 www.iconarch.com

CONSULTANT
GNCB Consulting Engineers, P.C.
130 ELM STREET
POST OFFICE BOX 802
OLD SAYBROOK
CONNECTICUT 06475
PHONE: 860 388 1224
FAX: 860 388 4613
GNCBENGINEERS.COM

STAMP

STATE OF CONNECTICUT
JAMES G. BROWN
14330
LICENSED
PROFESSIONAL ENGINEER

MARK	DATE	DESCRIPTION
	09-15-2014	PERMIT/ PRICING
	06-13-2014	PRICING
	11-18-2013	40% CHFA
	09-19-2013	CAM/ SPECIAL PERMIT

PROJECT NO.: 21222 GNCB NO.: 13147
DRAWN BY:
CHECKED BY:

SHEET TITLE

SECTIONS AND DETAILS

S-303

Issue Date C:\Users\GNCB228\Documents\Local Revit\13147 Washington Village Replacement-Norwalk\13147 S14 Washington Village - Building B - Local.rvt

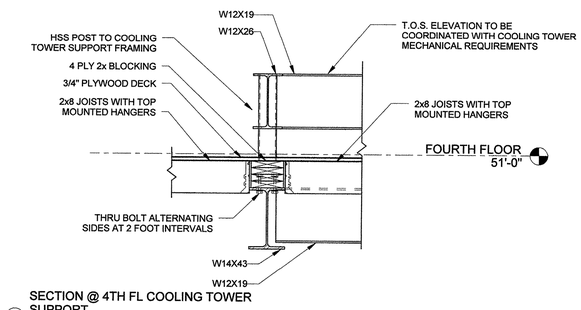

3 SECTION @ 4TH FL COOLING TOWER SUPPORT
3/4" = 1'-0"

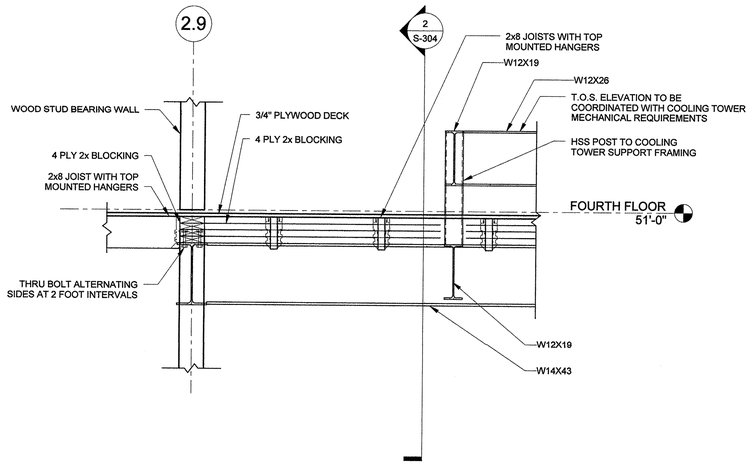

4 SECTION @ 4TH FL COOLING TOWER AND CORRIDOR
3/4" = 1'-0"

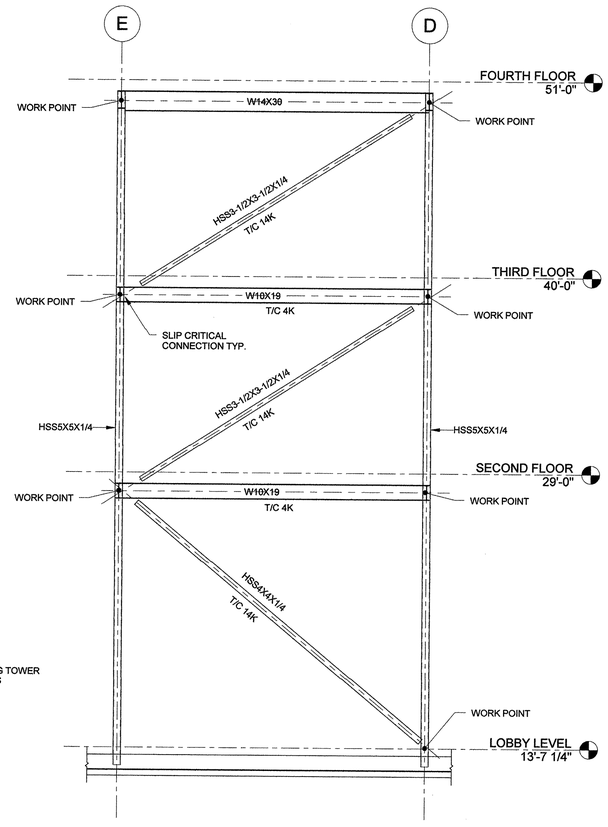

2 SECTION @ COOLING TOWER BRACING ON LINE 4.1 AND 2.9
1/4" = 1'-0"

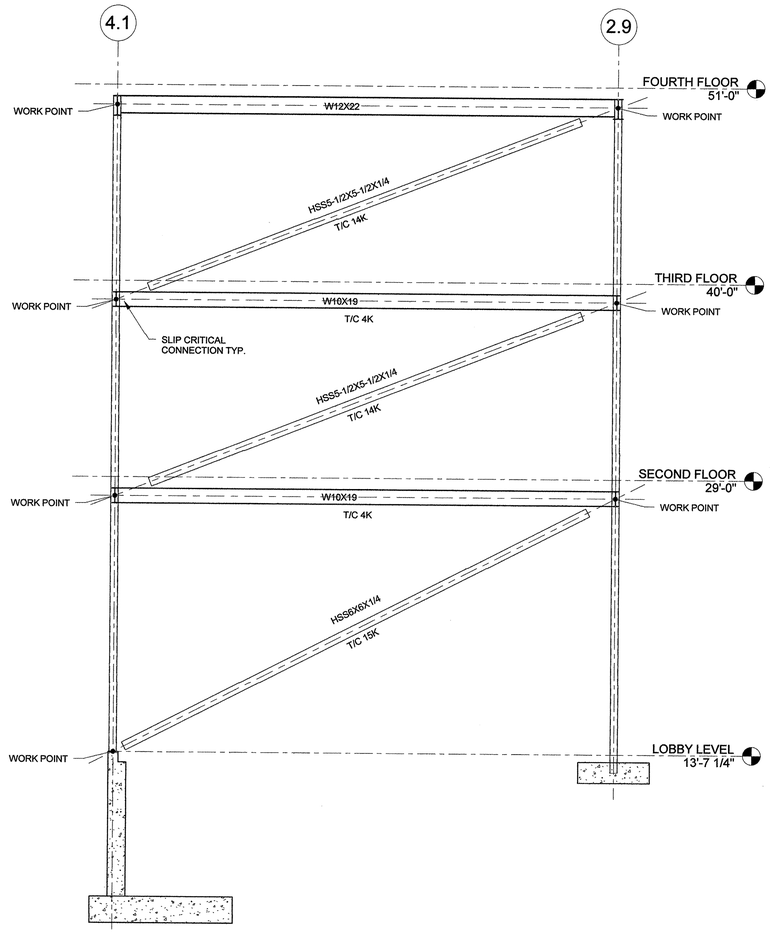

1 SECTION @ COOLING TOWER BRACING ON LINE E
1/4" = 1'-0"

Washington Village Phase 1

20 Day Street Building B

Norwalk, CT

Trinity Washington Village Limited Partnership
&
the Norwalk Housing Authority

E-ICON ARCHITECTURE
101 SUMMER ST BOSTON MA 02110
617-451-3333 www.iconarch.com

CONSULTANT

GNCB Consulting Engineers, P.C.
130 ELM STREET
POST OFFICE BOX 802
OLD SAYBROOK
CONNECTICUT 06475
PHONE: 860 388 1224
FAX: 860 388 4613
GNCBENGINEERS.COM

STAMP



MARK	DATE	DESCRIPTION
	09-15-2014	PERMIT/ PRICING
	06-13-2014	PRICING
	11-18-2013	40% CHFA
	09-19-2013	CAM/ SPECIAL PERMIT

PROJECT NO.: 21222 GNCB NO.: 13147
DRAWN BY:
CHECKED BY:

SHEET TITLE

SECTIONS AND DETAILS

S-304

Issue Date C:\Users\GNCB028\Documents\Local Revit\13147 Washington Village Replacement-Norwalk\13147 S14 Washington Village - Building B - Local.rvt

STEEL COLUMN SCHEDULE

FOURTH FLOOR	50'-7 1/2"	50'-7 1/2"				50'-5 3/4"	50'-4 1/2"	HSS4X4X1/4 52'-6" 50'-4 1/2"	HSS4X4X1/4 52'-6" 50'-4 1/2"	50'-4 1/2"	50'-4 1/2"	HSS4X4X1/4 52'-6"	HSS4X4X1/4 52'-6"	50'-4 1/2"		51'-0"	51'-0"	50'-7 1/2"			FOURTH FLOOR
51'-0" THIRD FLOOR	HSS4X4X1/4																	HSS8X6X5/8			51'-0" THIRD FLOOR
40'-0" SECOND FLOOR		HSS8X6X1/2				HSS8X6X1/2	HSS5X5X1/4			HSS5X5X1/4	HSS5X5X1/4			HSS5X5X1/4		HSS8X6X1/2	HSS8X6X1/2				40'-0" SECOND FLOOR
29'-0" FIRST FLOOR	28'-5 3/4"		28'-7 3/4" HSS4-1/2X4-1/2X1/4	28'-5 3/4" HSS8X6X3/8	26'-11 1/2" HSS5X5X1/4										28'-5 3/4" HSS8X6X1/4			28'-5 3/4" 27'-3 3/4" HSS5X5X3/8	28'-5 3/4" HSS5X5X1/4	28'-5 3/4" HSS5X5X1/4	29'-0" FIRST FLOOR
18'-0" LOBBY LEVEL																			17'-7"		18'-0" LOBBY LEVEL
13'-7 1/4" PARKING LEVEL		12'-9 1/4"	12'-9 1/4"	13'-7 1/4"	12'-7 1/4"	12'-7 1/4"	12'-7 1/4"			13'-7 1/4"	12'-7 1/4"			13'-7 1/4"	13'-7 1/4"	13'-7 1/4"	13'-7 1/4"	13'-7 1/4"		12'-9 1/4"	13'-7 1/4" PARKING LEVEL
7'-6"																					7'-6"
Column Locations	B.2(11'-1 3/8")-2.5(-9'-1 1/2")	B.2-3.5	B.2-3.8	B.8-0.1	B.8-1.7	B.8-2.3	D-2.9	D(4'-7 1/4")-2.9(-4'-10 3/8")	D(4'-7 1/4")-3.9(4'-8 1/4")	D-4.1	E-2.9	E(-4'-7 1/4")-2.9(-4'-10 3/8")	E(-4'-7 1/4")-3.9(4'-8 1/4")	E-4.1	RAD-0.1	RAD-0.2	RAD-0.3	.1A-2.8	.1A-3.8	.1A-RAD	

CONCRETE COLUMN SCHEDULE

FIRST FLOOR																		FIRST FLOOR
18'-0" PARKING LEVEL	15'-8 1/4" 24" ROUND COL	15'-8 1/4" 24" ROUND COL	15'-8 1/4" 24" ROUND COL	15'-8 1/4" 24" ROUND COL	15'-8 1/4" 24" ROUND COL	15'-8 1/4" 24" ROUND COL	15'-8 1/4" 24" ROUND COL	15'-8 1/4" 24" ROUND COL	15'-8 1/4" 24" ROUND COL	12'-9 1/4" 16 x 16	12'-9 1/4" 16 x 16	15'-8 1/4" 24" ROUND COL	15'-8 1/4" 24" x 24"	15'-8 1/4" 24" x 24"	15'-8 1/4" 24" ROUND COL	15'-8 1/4" 24" ROUND COL	15'-8 1/4" 24" ROUND COL	15'-8 1/4" 24" ROUND COL	18'-0" PARKING LEVEL
7'-6"																		7'-6"
Column Locations	B-6	B-7	B-8	B-9	B-10	B-11	B-12	B-13	B-14	B.2-3.5	B.2-3.8	C-5	C-6	C-7	C-8	C-9	C-10	C-11

CONCRETE COLUMN SCHEDULE

FIRST FLOOR																FIRST FLOOR
18'-0" PARKING LEVEL	15'-8 1/4" 24" x 24"	15'-8 1/4" 24" x 24"	15'-8 1/4" 24" ROUND COL		15'-8 1/4" 18 x 18	15'-8 1/4" 24" x 24"	15'-8 1/4" 24" x 24"	15'-8 1/4" 24" x 24"	15'-8 1/4" 24" x 24"	15'-8 1/4" 24" x 24"	15'-8 1/4" 24" x 24"	15'-8 1/4" 24" x 24"	15'-8 1/4" 24" x 24"	15'-8 1/4" 24" x 24"		18'-0" PARKING LEVEL
7'-6"																7'-6"
Column Locations	C-12	C-13	C-14	D-3.9	D-5	D-6	D-7	D-8	D-9	D-10	D-11	D-12	D-13	D-14	.1A-3.8	

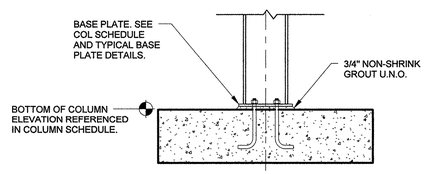

TYPICAL BASE PLATE ELEVATION DETAIL

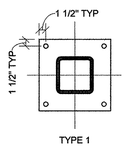

NOTES:
1. SEE TYPICAL COLUMN ANCHOR BOLT DETAIL FOR ADDITIONAL INFORMATION.
2. SEE COLUMN SCHEDULE FOR COLUMN AND BASE PLATE SIZES.
3. ATTACH COLUMN BASE PLATE AS PER AISC MINIMUM REQUIREMENTS U.N.O.

TYPICAL BASE PLATE DETAILS

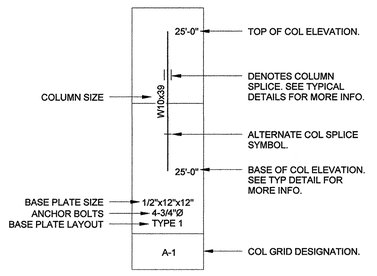

COLUMN SCHEDULE LEGEND FOR STEEL COLUMNS

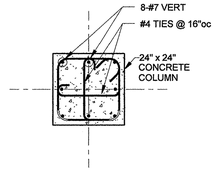

TYPICAL 24"x24" CONCRETE COLUMN

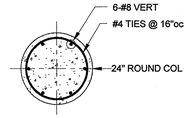

TYPICAL 24" DIA. ROUND CONCRETE COLUMN

Washington Village Phase 1

20 Day Street Building B

Norwalk, CT

Trinity Washington Village Limited Partnership
&
the Norwalk Housing Authority

E-ICON ARCHITECTURE
101 SUMMER ST BOSTON MA 02110
617-451-3333 www.iconarch.com

CONSULTANT

GNCB Consulting Engineers, P.C.
130 ELM STREET
POST OFFICE BOX 802
OLD SAYBROOK
CONNECTICUT 06475
PHONE: 860 388 1224
FAX: 860 388 4613
GNCBENGINEERS.COM

STAMP

STATE OF CONNECTICUT · CHARLES G. BROWN · 21390 · LICENSED PROFESSIONAL ENGINEER

MARK	DATE	DESCRIPTION
	09-15-2014	PERMIT/ PRICING
	06-13-2014	PRICING
	11-18-2013	40% CHFA
	09-19-2013	CAM/ SPECIAL PERMIT

PROJECT NO.: 21222 | GNCB NO.: 13147
DRAWN BY:
CHECKED BY:

SHEET TITLE

COLUMN SCHEDULE AND DETAILS

S-400

Issue Date C:\Users\GNCB028\Documents\Local Revit\13147 Washington Village Replacement-Norwalk\13147 S14 Washington Village - Building B - Local.rvt

PLUMBING GENERAL NOTES

1. THE PLUMBING CONTRACTOR SHALL COORDINATE ALL WORK TO BE PERFORMED WITH THE GENERAL, FIRE PROTECTION, HVAC AND ELECTRICAL CONTRACTORS. ANY WORK DONE BY THIS CONTRACTOR WHICH INTERFERES WITH WORK BY OTHERS AND WHICH WAS NOT FIRST COORDINATED SHALL BE REMOVED AND RELOCATED AT PLUMBING CONTRACTOR'S EXPENSE.
2. THIS CONTRACTOR SHALL BE RESPONSIBLE FOR VERIFICATION OF ALL UTILITIES AND THE PLACEMENT OF ALL PLUMBING EQUIPMENT PRIOR TO THE START OF HIS WORK. NO EXTRAS WILL BE ALLOWED DUE TO EQUIPMENT LOCATION CHANGE FROM THAT ON THE DRAWING.
3. IT IS THE INTENT THAT THE WORK SHALL BE COMPLETE IN EVERY RESPECT AND THAT ANY MATERIAL OR WORK NOT SPECIFICALLY MENTIONED OR SHOWN ON THE DRAWINGS BUT NECESSARY TO FULLY COMPLETE THE WORK SHALL BE PROVIDED.
4. THE LOCATION OF SOME ITEMS SHOWN ON THE DRAWINGS MAY BE APPROXIMATE AND THE OWNER SHALL HAVE THE RIGHT TO MAKE MINOR REVISIONS BEFORE THE WORK IS INSTALLED WITHOUT ADDITIONAL COST.
5. ALL WORK SHALL BE PERFORMED IN ACCORDANCE WITH ALL APPLICABLE CODES AND OWNER'S MINIMUM REQUIREMENTS. IN ALL CASES, THE MORE STRINGENT SHALL APPLY.
6. THIS CONTRACTOR SHALL FURNISH AND INSTALL ALL NECESSARY VALVES, TRAPS AND ALL CONTROL DEVICES REQUIRED FOR PROPER COMPLETION OF UTILITY PIPING.
7. STORM, WASTE AND VENT PIPING SHALL BE CAST IRON.
8. WATER PIPING SHALL BE TYPE "L" COPPER WITH LEAD-FREE SOLDER JOINTS AND NON-CORROSIVE LEAD-FREE FLUX
9. DOMESTIC WATER PIPING SHALL BE INSULATED WITH A MINIMUM OF 1/2" FIBERGLASS INSULATION HAVING A VAPOR BARRIER JACKET WITH SEALED JOINTS.
10. ALL WATER PIPING SHALL BE CONCEALED WITHIN A WALL OR PIPE CHASE EXCEPT FOR THOSE CHROME PLATED PORTIONS THAT ARE REQUIRED TO MAKE FINAL CONNECTIONS TO PLUMBING FIXTURES.
11. PROVIDE CHROME PLATED ESCUTCHEONS WHERE PIPES PENETRATE FLOORS, WALLS OR CEILINGS.
12. ALL WATER SUPPLIES TO FIXTURES OR GROUP OF FIXTURES MUST INCLUDE WATER HAMMER ARRESTORS SIZED IN ACCORDANCE WITH P.D.I. STANDARDS.
13. THE CONTRACTOR SHALL PROVIDE OVERFLOW PANS FOR ALL WASHING MACHINES LOCATED IN LAUNDRY ROOM ON EACH FLOOR. PIPE OVERFLOW PANS TO FLOOR DRAINS.
14. REFER TO OTHER TRADE'S DRAWINGS FOR ADDITIONAL INFORMATION.

PLUMBING FIXTURE SCHEDULE

SYMBOL	FIXTURE				FITTINGS			TRAP	CARRIER	REMARKS
	MANUFACTURER	MODEL	TYPE	SIZE	MANUFACTURER	TYPE	SUPPLY			
WC-1	TOTO	ECO DRAKE CST744E	FLOOR MOUNTED E-MAX FLUSHING 1.28 GPF	–	–	–	MCGUIRE 172LK 1/2" SUPPLY	INTEGRAL	–	1. SOFTCLOSE TOILET SEAT SS114, CLOSED FRONT WITH COVER & STA-TITE HINGES.
WC-2 (H/C)	TOTO	ECO DRAKE CST744EL	FLOOR MOUNTED POWER WASH 1.28 GPF	–	–	–	MCGUIRE 172LK 1/2" SUPPLY	INTEGRAL	–	1. SOFTCLOSE TOILET SEAT SS114, CLOSED FRONT WITH COVER & STA-TITE HINGES.
WC-3 (H/C)	AMERICAN STANDARD	AFWALL FLOWISE 3351.128	WALL MOUNTED FLUSHOMETER 1.28 GPF	–	–	–	–	INTEGRAL	PROVIDE WALL SUPPORT CARRIER	1. SEAT-AMERICAN STANDARD 5901.100 H/D OPEN FRONT LESS COVER MOUNTED AT HANDICAP ACCESSIBLE HEIGHT. 2. SLOAN ROYAL MODEL FLUSHOMETER 111-1.28 FOR TOP SPUD BOWL.
L-1	~~SWANSTONE~~ ~~TOTO~~ CONTOUR	LAVATORY ~~LT191(G)~~	INTEGRAL ~~UNDERCOUNTER~~ SINK	–	SYMMONS DIA	SYMMONS SLS-3512	MCGUIRE 170LK	2" CHROME PLATED CAST BRASS	–	1. ~~UNDERCOUNTER LAVATORY~~ INTEGRAL 2. SINGLE POST ROUND FAUCET 3. NIAGARA N3205N AERATOR 0.5 GPM
L-2 (H/C)	~~SWANSTONE~~ ~~TOTO~~ CONTOUR	LAVATORY ~~LT191(G)~~	INTEGRAL ~~UNDERCOUNTER~~ SINK	–	SYMMONS DIA	SYMMONS SLS-3512	MCGUIRE 170LK	2" CHROME PLATED CAST BRASS	–	1. MCGUIRE PRODRAINWC DRAIN WITH PERFORATED STRAINER & 1-1/4" TAILPIECE HANDICAP OFFSET 2. TRUEBRO HANDILAV-GUARD INSULATION KIT ON SUPPLIES AND WASTE. 3. NIAGARA N3205N AERATOR 0.5 GPM
L-3 (H/C)	TOTO	LAVATORY LT191(G) ADA HEIGHT & DEPTH	UNDERCOUNTER	–	SYMMONS DIA	SYMMONS SLS-3512	MCGUIRE 170LK	2" CHROME PLATED CAST BRASS	–	1. MCGUIRE PRODRAINWC DRAIN WITH PERFORATED STRAINER & 1-1/4" TAILPIECE HANDICAP OFFSET 2. TRUEBRO HANDILAV-GUARD INSULATION KIT ON SUPPLIES AND WASTE. 3. PROVIDE WITH .25 GPM AERATOR
SK-1	ELKAY	LUSTERTONE LR-2521	SELF RIMMING S.S. INSERT	25"W x 21-1/4"D x 8"H	SYMMONS	SYMMETRIX DECK MOUNTED S-23	MCGUIRE 175WC	2" CHROME PLATED CAST BRASS OFFSET DRAIN DELUX S.S. STRAINER	–	1. GARBAGE DISPOSAL 2. PROVIDE WITH 2.2 GPM AERATOR
SK-2 (H/C)	ELKAY	LUSTERTONE LRAD-2222	SELF RIMMING S.S. INSERT	22"Wx22"Dx 6-1/2"H	SYMMONS	SYMMETRIX DECK MOUNTED S-23	MCGUIRE 175WC	2" CHROME PLATED CAST BRASS OFFSET DRAIN DELUX S.S. STRAINER	–	1. HANDICAP ACCESSIBLE 2. TRUEBRO HANDILAV-GUARD INSULATION KIT ON SUPPLIES AND WASTE 3. GARBAGE DISPOSAL 4. PROVIDE WITH 2.2 GPM AERATOR
GD-1	INSINKERATOR	BADGER 5	CONTINUOUS FEED	–	–	–	–	1-1/2" CUSHIONED SLIP JOINT CONNECTION	–	1. DISHWASHER DRAIN CONNECTION 2. ON/OFF CONTROL: WALL SWITCH 3. 1/2 HP/120V/1PH/1725 RPM
SH-1	AMERICAN STANDARD	–	TUB/SHOWER	60"W x 30"D x 16-5/8"H	SYMMONS	3501-CYL	–	2"	–	1. SELF CAULKING BRASS DRAIN W/S.S. STRAINER. 2. NIAGARA HANDHELD N2945CH – FLOW 1.5 GPM
SH-2	AMERICAN STANDARD	TILE	ADA COMPLIANT ROLL-IN SHOWER	CUSTOM	SYMMONS	S-3504-H321-V-CYL-B	–	2"	–	1. HANDICAP ACCESSIBLE 2. GRAB BARS BY ARCHITECT 3. ADJUSTABLE WALL BRACKET FOR HAND HELD SHOWER 4. SELF CAULKING BRASS DRAIN W/S.S. STRAINER. 5. REMOVABLE SEAT BY ARCHITECT 6. INTEGRAL SERVICE STOPS
WB-1	GUY GREY	WB-200	RECESSED BOX	11-3/4"W x 9-1/2"D	–	–	–	2"	–	1. PROVIDE WITH "DRIPTITE" LAUNDRY TRAY AND FLOODSTOP MOISTURE SENSOR MODEL FS3/4H-90
HB-A	ZURN	Z1310	ECOLOTROL WALL HYDRANT	–	–	–	–	–	–	1. PROVIDE WITH LOOSE KEY
MSB-1	FIAT	TSB500	FLOOR MOUNTED SERVICE BASIN	36"x36"	CHICAGO	MODEL 445-897SRCXKCP	–	3"	–	1. PROVIDE WITH HOSE & HOSE BRACKET, ALUM. BUMPERGUARD, S.S. WALL GUARDS, SILICONE SEALENT & STRAINER.
HB-B	ZURN	Z1341-BFP	INTERIOR WALL HOSE BIBB	–	–	–	–	–	–	1. PROVIDE WITH LOOSE KEY
HB-C	ZURN	Z1388	EXTERIOR ROOF HYDRANT	–	–	–	–	–	–	1. NON-FREEZE ROOF HYDRANT
UR-1 (H/C)	AMERICAN STANDARD	WASHBROOK FLOWISE 6590.001	WALL MOUNTED FLUSHOMETER 1.00 GPF	–	–	–	–	INTEGRAL	PROVIDE WALL SUPPORT CARRIER	1. SLOAN ROYAL MODEL FLUSHOMETER 111-1.00 FOR TOP SPUD BOWL. 2. MOUNT PER ADA REQUIREMENTS.

DRAIN SCHEDULE

TYPE	MANUFACTURER	MODEL	DESCRIPTION	REMARKS
FD-A	ZURN	Z-415	GENERAL PURPOSE	W/TRAP PRIMER
FD-B	ZURN	Z-541	HEAVY DUTY GRID	MECHANICAL ROOM DRAIN, W/TRAP PRIMER
FD-C	JOSAM	37810	HEAVY DUTY GRID	GARAGE FLOOR DRAIN W/REMOVAL SEDIMENT BUCKET, COVER W/TAMPER PROOF SCREWS
RD-A	JOSAM	22200	COMB. DRAIN/OVERFLOW	CAST IRON DOME
DN-A	JOSAM	25010-BS	DOWNSPOUT NOZZLE	CAST BRONZE, LOOSE WALL FLANGE WITH BIRDSCREEN
AD-A	JOSAM	23730	EXT. STAIRWELL AREA DRAIN	WITH REMOVAL SEDIMENT BUCKET
TD-A	JOSAM	76010	TRENCH DRAIN	WITH REMOVAL SEDIMENT BUCKET
FD-D	JOSAM	49870A	CAN WASH DRAIN	12" SQ. CAN WASH DRAIN W/VANDAL-PROOF SCREWS, S.S. REMOVABLE MESH BUCKET LINER, CLAMP DEVICE & W/TRAP PRIMER.

GAS WATER HEATER SCHEDULE

TAG	MANUFACTURER	MODEL	TANK SIZE	RECOVERY		BTUH INPUT	REMARKS
				GPH	TEMP RISE		
GWH-1B	PVI	CONQUEST GAS CONDENSING WATER HEATER /AQUAPLEX # 80 L 130A-GCML	130	903	40° TO 140°	800	97% THERMAL EFFICIENCY
GWH-2B	PVI	CONQUEST GAS CONDENSING WATER HEATER /AQUAPLEX # 80 L 130A-GCML	130	903	40° TO 140°	800	97% THERMAL EFFICIENCY

NOTE:
PROVIDE UNITS WITH:
* CSA RATED TEMEPERATURE & PRESSURE RELIEF VALVES (FIELD INSTALLED) * ELECTRONIC LOW-WATER CUT-OFF (FIELD INSTALLED)
* VENT TERMINATION CAP FOR EXHAUST VENT (6") (FIELD INSTALLED) * VENT TERMINATION CAP FOR DIRECT INLET AIR (6") (FIELD INSTALLED)
* CONDENSATE NEUTRALIZATION SYSTEM (FIELD INSTALLED)

PLUMBING FIXTURE ROUGHING SCHEDULE

TAG	FIXTURE TYPE	S/W	V	CW	HW	REMARKS
WC-1	WATER CLOSET	4"	2"	1/2"	–	
WC-2	WATER CLOSET	4"	2"	1/2"	–	HANDICAP ACCESSIBLE
WC-3	WATER CLOSET	4"	2"	1-1/2"	–	HANDICAP ACCESSIBLE
L-1	LAVATORY	2"	2"	1/2"	1/2"	
L-2	LAVATORY	2"	2"	1/2"	1/2"	HANDICAP ACCESSIBLE.
L-3	LAVATORY	2"	2"	1/2"	1/2"	HANDICAP ACCESSIBLE.
SK-1	SINK	2"	2"	1/2"	1/2"	1/2" HW TO DISHWASHER
SK-2	SINK	2"	2"	1/2"	1/2"	HANDICAP ACCESSIBLE. 1/2" HW TO DISHWASHER
SH-1	TUB/SHOWER	2"	2"	1/2"	1/2"	
SH-2	TUB/SHOWER	2"	2"	1/2"	1/2"	HANDICAP ACCESSIBLE
WB-1	WASHING MACHINE BOX	2"	2"	1/2"	1/2"	
HB-A	HOSE BIBB (EXT)	–	–	3/4"	–	
MSB-1	MOP SERVICE BASIN	3"	2"	3/4"	3/4"	
HB-B	HOSE BIBB (INT)	–	–	3/4"	–	
HB-C	ROOF HYDRANT	–	–	3/4"	–	
UR-1	URINAL	3"	2"	3/4"	–	HANDICAP ACCESSIBLE

BOOSTER PUMP SCHEDULE (Building 'B')

TAG	DESCRIPTION	FLOW	PRESSURE	ELECTRICAL CHARACTERISTICS				REMARKS
				HP	VOLTAGE	PHASE	RPM	
BP-1	DUPLEX DOMESTIC BOOSTER PUMP. BELL & GOSSETT 335V SERIES WITH 2 PUMPS RATED AT 100% EACH	–	–	7.5 EACH	208	3	3500	REFER TO NOTE 1

NOTE:
1. PUMP PACKAGE INCLUDING SINGLE POINT POWER FEED, CONTROL PANEL, FLOW METER, SUCTION PRESSURE TRANSDUCER, THERMAL PURGE, 2-1/2" PRESSURE GAUGE AND SEPARATELY MOUNTED EXPANSION TANK

PLUMBING LEGEND SYMBOLS AND ABBREVIATIONS

CW		COLD WATER	SS	SOIL STACK
CW		COLD WATER BELOW FLOOR	WS	WASTE STACK
HW		HOT WATER	VS	VENT STACK
HW		HOT WATER BELOW FLOOR	TR	THRU ROOF
HWR		HOT WATER RETURN	INV	INVERT ELEVATION
NCW		NON-POTABLE COLD WATER	TYP	TYPICAL
S or W		SOIL OR WASTE	NTS	NOT TO SCALE
S or W		SOIL OR WASTE BELOW FLOOR	W & V	WASTE AND VENT
V		VENT	S & V	SOIL AND VENT
V		VENT BELOW FLOOR	AFF	ABOVE FINISHED FLOOR
G		NATURAL GAS	GC	GENERAL CONTRACTOR
ST		STORM LEADER	FPC	FIRE PROTECTION CONTRACTOR
		HEAT TRACE/MAINTENANCE TAPE AND INSULATE	PC	PLUMBING CONTRACTOR
WC-1		PLUMBING FIXTURE DESIGNATION	EC	ELECTRICAL CONTRACTOR
		SHUT-OFF VALVE	HVAC	HVAC CONTRACTOR
	BV	BALANCING VALVE	OFI	OWNER FURNISHED AND INSTALLED
	PRV	PRESSURE REDUCING VALVE	CFOI	CONTRACTOR FURNISHED/OWNER INSTALLED
	VIV	VALVE IN VERTICAL	OFCI	OWNER FURNISHED/CONTRACTOR INSTALLED
	CV	CHECK VALVE	S=.01	SLOPE = 1/8" PER FOOT
	DV	HOSE END DRAIN VALVE	S=.02	SLOPE = 1/4" PER FOOT
	W & T	WASTE AND TRAP	MSB	MOP SERVICE BASIN
	OED	OPEN END DRAIN W/TRAP	WC	WATER CLOSET
	CO	CLEANOUT PLUG	UR	URINAL
	FCO	FLUSH FLOOR CLEANOUT	L	LAVATORY
	WCO	WALL CLEANOUT	SH	SHOWER
		ARROW INDICATES DIRECTION OF FLOW	EWC	ELECTRIC WATER COOLER
		ARROW INDICATES DIRECTION OF SLOPE DOWN	DF	DRINKING FOUNTAIN
		UNION	SK	SINK
	PA	PIPE ANCHOR	CE	CAP EXISTING PIPE
	PAG	PIPE ALIGNMENT GUIDE	BFP	BACKFLOW PREVENTER
		CAPPED PIPE	AP	ACCESS PANEL
		STRAINER	FFD	FUNNEL FLOOR DRAIN
	HB-A	HOSE BIBB AND TYPE	VTR	VENT THROUGH ROOF
	WH-A	WALL HYDRANT AND TYPE		
	DN	PIPE DOWN		
	UP	PIPE UP		
	DP	PIPE DROP		
	FD-A	FLOOR DRAIN AND TYPE		
	RPBP	REDUCED PRESSURE BACKFLOW PREVENTOR		
	T	THERMOMETER		
	PG	PRESSURE GAUGE ASSEMBLY		
	T & P	TEMPERATURE AND PRESSURE RELIEF VALVE		
		VACUUM RELIEF VALVE		
M		METER		
MH		MANHOLE		
		NATURAL GAS SHUTOFF VALVE		
1 / P-1		DETAIL DESIGNATION		
P / 1		STACK DESIGNATION		

PRESSURE REGULATING VALVE SCHEDULE

ID	MFG'R	MODEL NO.	SIZE	DELTA P	MIN. GPM	MAX. GPM
PRV-1	WATTS	SERIES 223 LP	1/2"	25	1/2	6

THERMOSTATIC MIXING VALVE SCHEDULE

ID	MFG'R	MODEL NO.	GPM	DELTA P	INLETS	OUTLET
TMV-1	LAWLER MFG.	#803	–	–	1-1/4"	1-1/2"

HIGH-LOW WATER MIXER

Washington Village Phase 1

20 Day Street
Building B

Norwalk, CT

Trinity Washington Village Limited Partnership
&
the Norwalk Housing Authority

E-ICON ARCHITECTURE
101 SUMMER ST BOSTON MA 02110
617-451-3333 www.iconarch.com

CONSULTANT
CENTEK engineering
Centered on Solutions ™
www.CentekEng.com
(203) 488-0580
(203) 488-8587 Fax
63-2 North Branford Road, Branford, CT 06405

STAMP



KEYPLAN

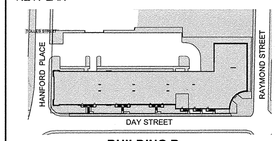

BUILDING B

N

MARK	DATE	DESCRIPTION
	09-15-2014	PERMIT/ PRICING
	06-13-2014	PRICING
	11-18-2013	40% CHFA
	09-19-2013	CAM/ SPECIAL PERMIT

PROJECT NO.: 21222/CENTEK #13232.02
DRAWN BY: SAO/TSP
CHECKED BY: FRC

SHEET TITLE

PLUMBING SCHEDULES LEGENDS & NOTES

P-001

J:\Jobs\1323202.MEP\PLUM\P-001.dwg Sep 17, 2014 - 10:07pm tsp

PLUMBING WORK NOTES

(1) EJECTOR PUMP EP-1: ONE (1) HYDROMATIC SUBMERSIBLE NON-CLOG PUMP MODEL #SHEF45A1 WITH PIGGY BACK FLOAT SWITCH. 120V OUTLET PLUG. PUMP TURNS ITSELF ON-OFF AUTOMATICALLY. HIGH WATER ALARM PANEL, CONERY EXT SERIES ALARM PACKAGE.

GENERAL NOTE:

1. COORDINATE ALL WORK WITH ALL OTHER TRADES. REFER TO OTHER TRADE'S DRAWINGS FOR ADDITIONAL INFORMATION.

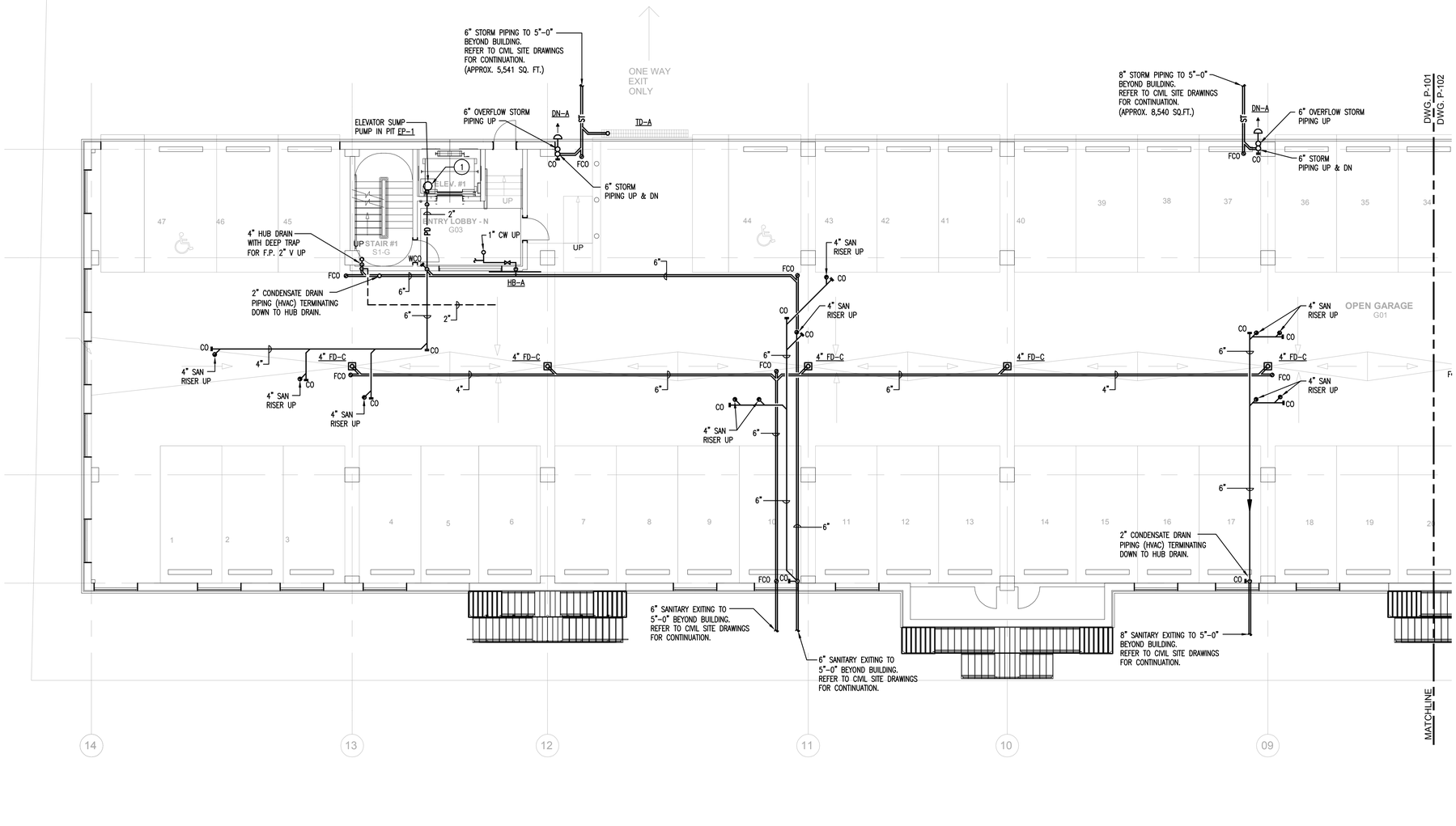

1 **GROUND LEVEL PLAN (NORTH WING) - PLUMBING**
SCALE: 1/8"=1'-0"

PROJECT NORTH

J:\Jobs\13232002.MEP\PLUM\P-101 & P-102.dwg Sep 17, 2014 - 10:07pm tsp

Washington Village Phase 1

20 Day Street Building B

Norwalk, CT

Trinity Washington Village Limited Partnership
&
the Norwalk Housing Authority

E-ICON ARCHITECTURE
101 SUMMER ST BOSTON MA 02110
617-451-3333 www.iconarch.com

CONSULTANT
CENTEK engineering
Centered on Solutions ℠
www.CentekEng.com
(203) 488-0580
(203) 488-8587 Fax
63-2 North Branford Road, Branford, CT 06405

STAMP

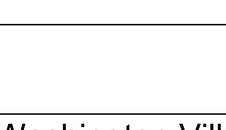

KEYPLAN

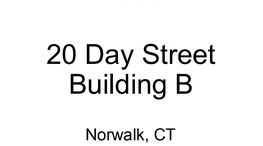

BUILDING B

N 0 4' 8' 16'

MARK	DATE	DESCRIPTION
	09-15-2014	PERMIT/ PRICING
	06-13-2014	PRICING
	11-18-2013	40% CHFA
	09-19-2013	CAM/ SPECIAL PERMIT

PROJECT NO.: 21222/CENTEK #13232.02
DRAWN BY: SAO/TSP
CHECKED BY: FRC

SHEET TITLE

BUILDING B GROUND LEVEL PLAN (NORTH WING) - PLUMBING

P-101

PLUMBING WORK NOTES

1. EJECTOR PUMP EP-1: ONE (1) HYDROMATIC SUBMERSIBLE NON-CLOG PUMP MODEL #SHEF45A1 WITH PIGGY BACK FLOAT SWITCH. 120V OUTLET PLUG. PUMP TURNS ITSELF ON-OFF AUTOMATICALLY. HIGH WATER ALARM PANEL, CONERY EXT SERIES ALARM PACKAGE..

GENERAL NOTE:

1. COORDINATE ALL WORK WITH ALL OTHER TRADES. REFER TO OTHER TRADE'S DRAWINGS FOR ADDITIONAL INFORMATION.

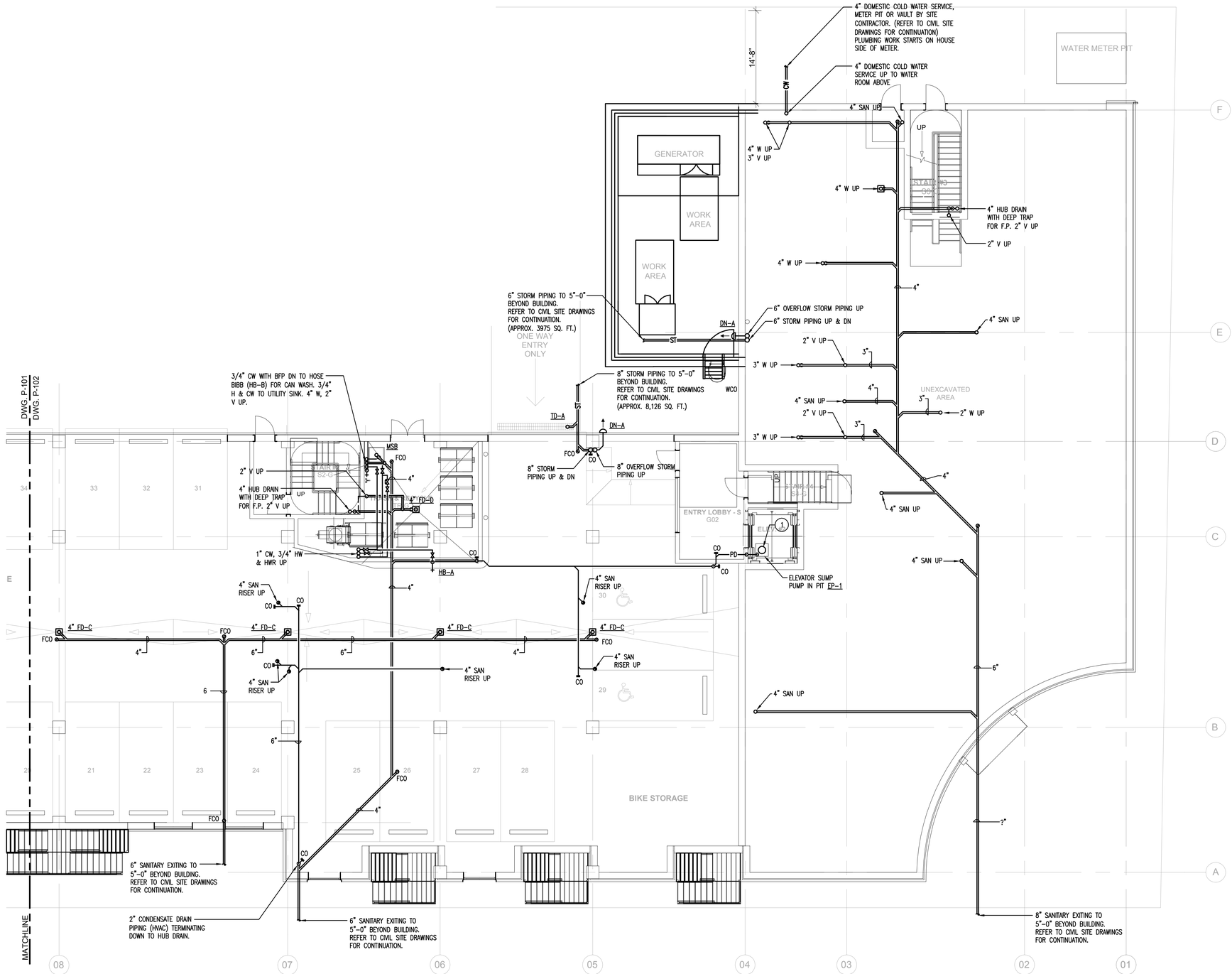

1 **GROUND LEVEL PLAN (SOUTH WING) - PLUMBING**
SCALE: 1/8"=1'-0"

PROJECT NORTH

Washington Village Phase 1

20 Day Street Building B

Norwalk, CT

Trinity Washington Village Limited Partnership
&
the Norwalk Housing Authority

E-ICON ARCHITECTURE
101 SUMMER ST BOSTON MA 02110
617-451-3333 www.iconarch.com

CONSULTANT
CENTEK engineering
Centered on Solutions ℠
www.CentekEng.com
(203) 488-0580
(203) 488-8587 Fax
63-2 North Branford Road, Branford, CT 06405

STAMP



KEYPLAN

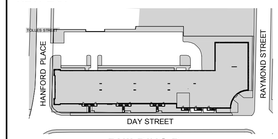

BUILDING B

N 0 4' 8' 16'

MARK	DATE	DESCRIPTION
	09-15-2014	PERMIT/ PRICING
	06-13-2014	PRICING
	11-18-2013	40% CHFA
	09-19-2013	CAM/ SPECIAL PERMIT

PROJECT NO.: 21222/CENTEK #13232.02
DRAWN BY: SAO/TSP
CHECKED BY: FRC

SHEET TITLE

BUILDING B GROUND LEVEL PLAN (SOUTH WING) - PLUMBING

P-102

J:\Jobs\13232.02\MEP\LM\P-101 & P-102.dwg Sep 17, 2014 - 10:07pm tsp

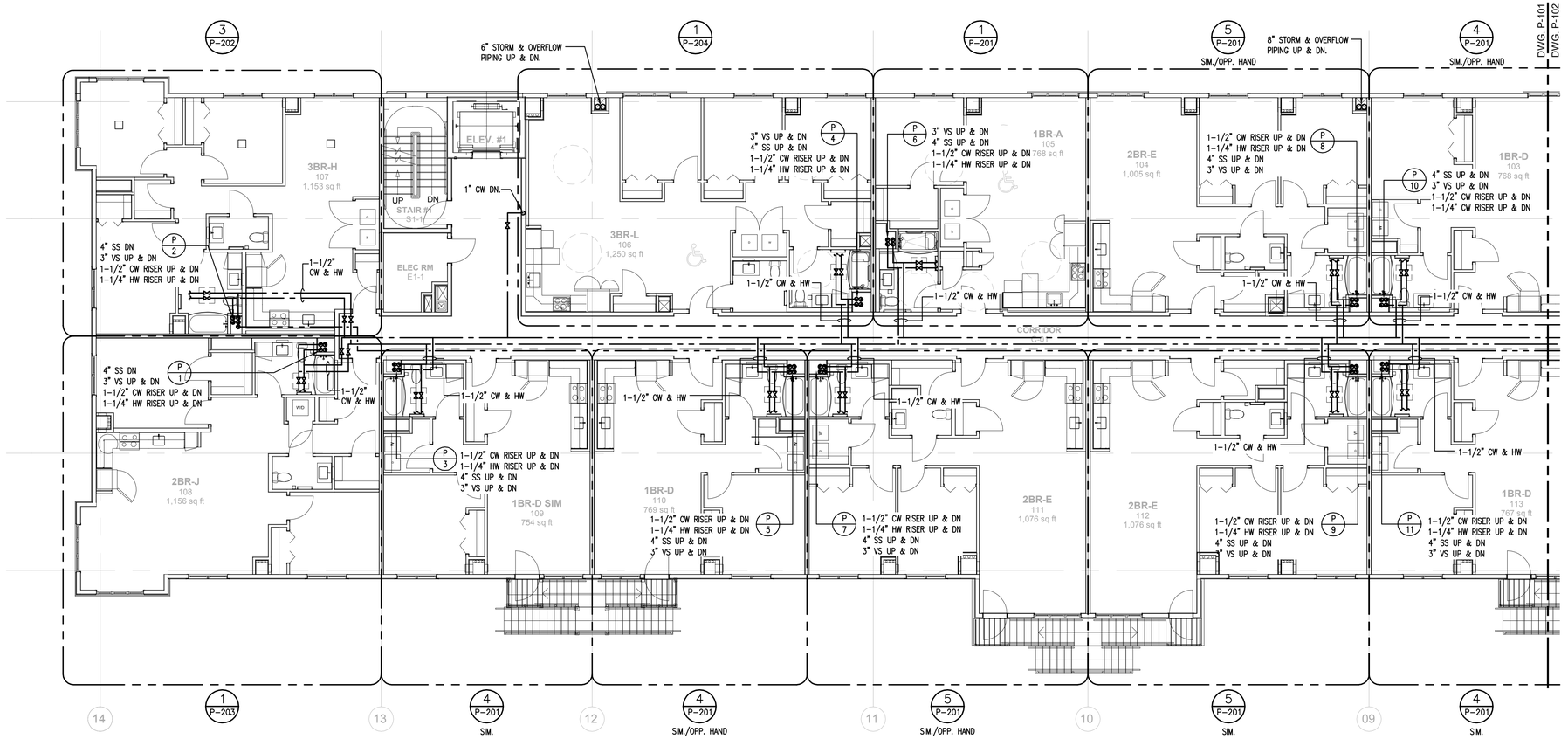

1 **FIRST FLOOR PLAN (NORTH WING) - PLUMBING**
SCALE: 1/8"=1'-0"

J:\Jobs\1323202.ME\PLUM\P-103 & P-104.dwg Sep 17, 2014 - 10:08pm tsp

PROJECT NORTH

Washington Village Phase 1

20 Day Street Building B

Norwalk, CT

Trinity Washington Village Limited Partnership
&
the Norwalk Housing Authority

E-ICON ARCHITECTURE
101 SUMMER ST BOSTON MA 02110
617-451-3333 www.iconarch.com

CONSULTANT
CENTEK engineering
Centered on Solutions ℠
www.CentekEng.com
(203) 488-0580
(203) 488-8587 Fax
63-2 North Branford Road, Branford, CT 06405

STAMP

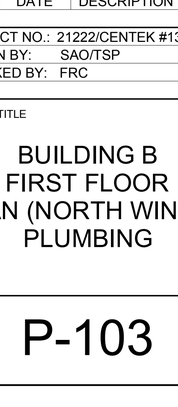

KEYPLAN

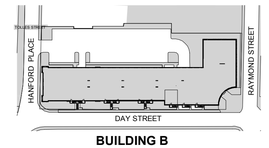

BUILDING B

N 0 8' 16'

MARK	DATE	DESCRIPTION
	09-15-2014	PERMIT/ PRICING
	06-13-2014	PRICING
	11-18-2013	40% CHFA
	09-19-2013	CAM/ SPECIAL PERMIT

PROJECT NO.: 21222/CENTEK #13232.02
DRAWN BY: SAO/TSP
CHECKED BY: FRC

SHEET TITLE

BUILDING B
FIRST FLOOR
PLAN (NORTH WING) -
PLUMBING

P-103

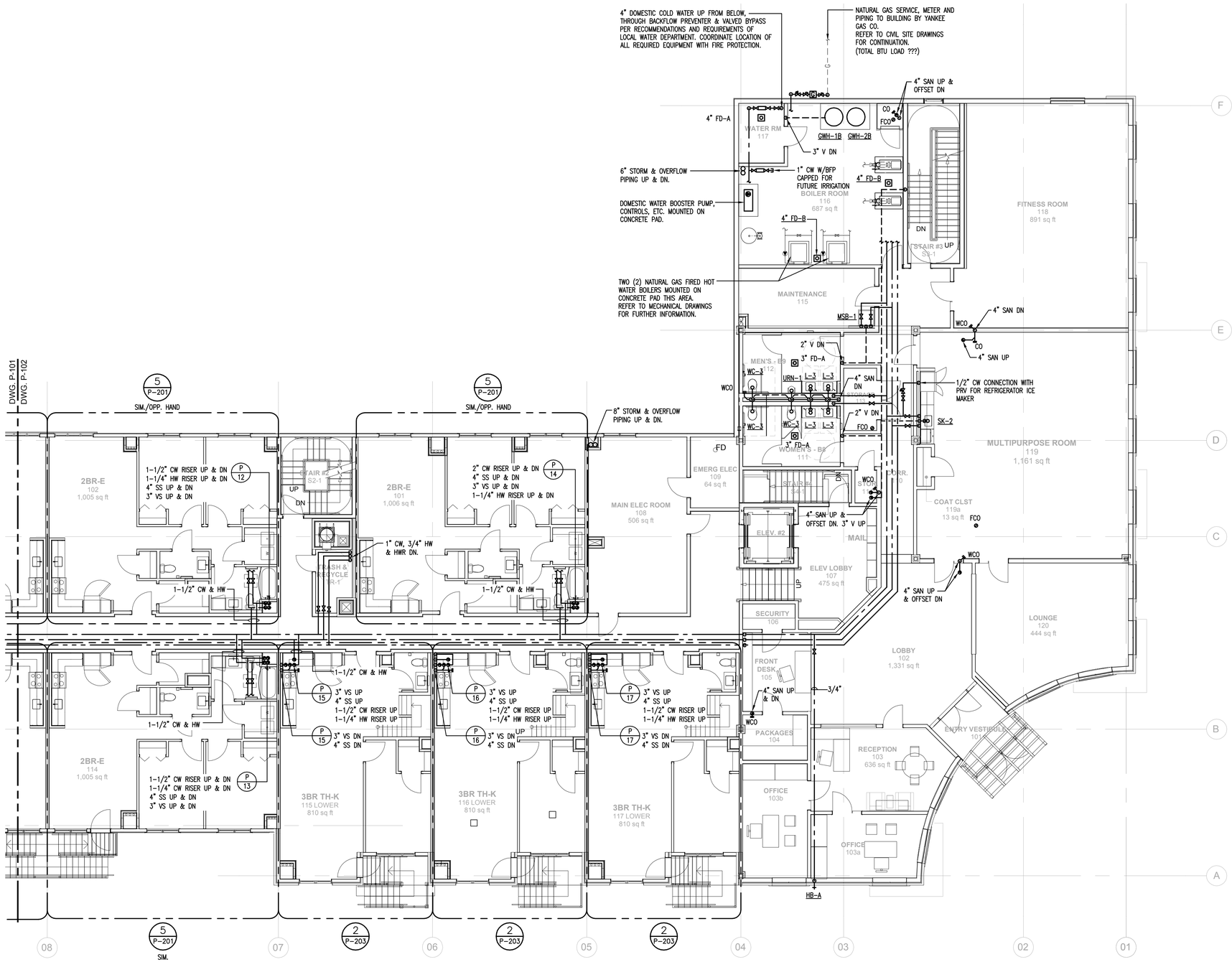

1 **FIRST FLOOR PLAN (SOUTH WING) - PLUMBING**
SCALE: 1/8"=1'-0"

PROJECT NORTH

J:\Jobs\1323202.ME\PLUM\P-103 & P-104.dwg Sep 17, 2014 - 10:06pm tsp

Washington Village Phase 1

20 Day Street Building B

Norwalk, CT

Trinity Washington Village Limited Partnership
&
the Norwalk Housing Authority

E-ICON ARCHITECTURE
101 SUMMER ST BOSTON MA 02110
617-451-3333 www.iconarch.com

CONSULTANT
CENTEK engineering
Centered on Solutions ℠
www.CentekEng.com
(203) 488-0580
(203) 488-8587 Fax
63-2 North Branford Road, Branford, CT 06405

STAMP



KEYPLAN

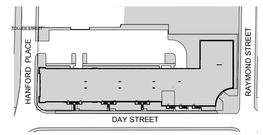

BUILDING B

N 0 8" 4' 16'

MARK	DATE	DESCRIPTION
	09-15-2014	PERMIT/ PRICING
	06-13-2014	PRICING
	11-18-2013	40% CHFA
	09-19-2013	CAM/ SPECIAL PERMIT

PROJECT NO.: 21222/CENTEK #13232.02
DRAWN BY: SAO/TSP
CHECKED BY: FRC

SHEET TITLE

BUILDING B FIRST FLOOR PLAN (SOUTH WING) - PLUMBING

P-104

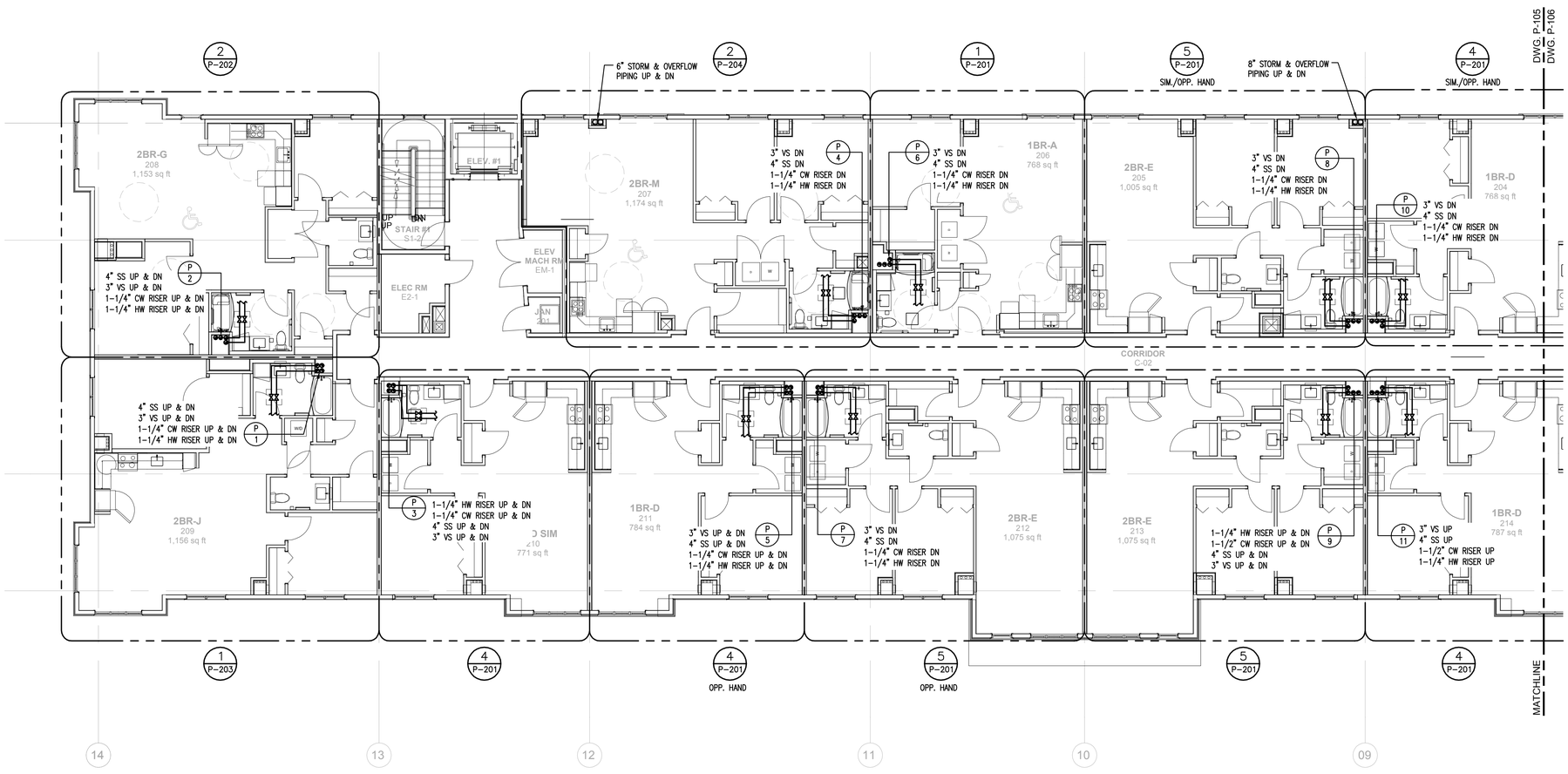

1 **SECOND FLOOR PLAN (NORTH WING) - PLUMBING**
SCALE: 1/8"=1'-0"

PROJECT NORTH

J:\Jobs\1323202.1\EVPLUM\P-105 & P-106.dwg Sep 17, 2014 - 10:17pm tsp

Washington Village Phase 1

20 Day Street Building B

Norwalk, CT

Trinity Washington Village Limited Partnership
&
the Norwalk Housing Authority

E-ICON ARCHITECTURE
101 SUMMER ST BOSTON MA 02110
617-451-3333 www.iconarch.com

CONSULTANT
CENTEK engineering
Centered on Solutions ℠
www.CentekEng.com
(203) 488-0580
(203) 488-8587 Fax
63-2 North Branford Road, Branford, CT 06405

STAMP



KEYPLAN

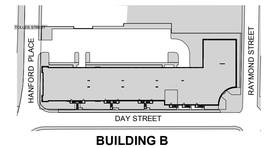

BUILDING B

N 0 4' 8' 16'

MARK	DATE	DESCRIPTION
	09-15-2014	PERMIT/ PRICING
	06-13-2014	PRICING
	11-18-2013	40% CHFA
	09-19-2013	CAM/ SPECIAL PERMIT

PROJECT NO.:	21222/CENTEK #13232.02
DRAWN BY:	SAO/TSP
CHECKED BY:	FRC

SHEET TITLE

BUILDING B SECOND FLOOR PLAN (NORTH WING) - PLUMBING

P-105

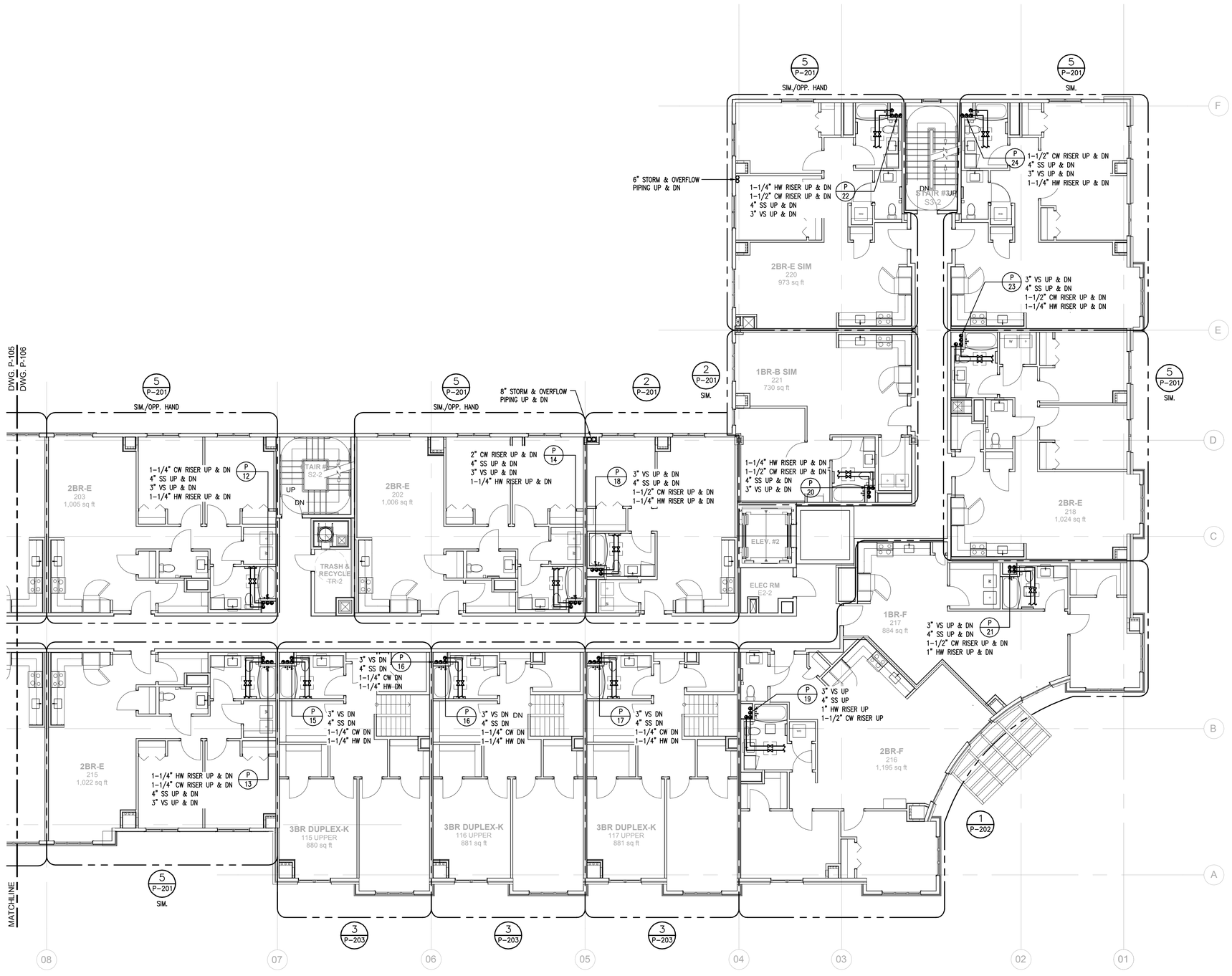
DWG. P-105
DWG. P-106
MATCHLINE
5 P-201 SIM./OPP. HAND
5 P-201 SIM.
2 P-201 SIM.
8" STORM & OVERFLOW PIPING UP & DN
6" STORM & OVERFLOW PIPING UP & DN
1-1/4" HW RISER UP & DN
1-1/2" CW RISER UP & DN
4" SS UP & DN
3" VS UP & DN
1-1/4" CW RISER UP & DN
2" CW RISER UP & DN
1-1/2" CW RISER UP & DN
1-1/4" HW RISER UP & DN
3" VS DN
4" SS DN
1-1/4" CW DN
1-1/4" HW DN
1-1/4" HW-DN
3" VS DN DN
1" HW RISER UP
1" HW RISER UP & DN
1" HW RISER UP & DN
1" HW RISER UP & DN

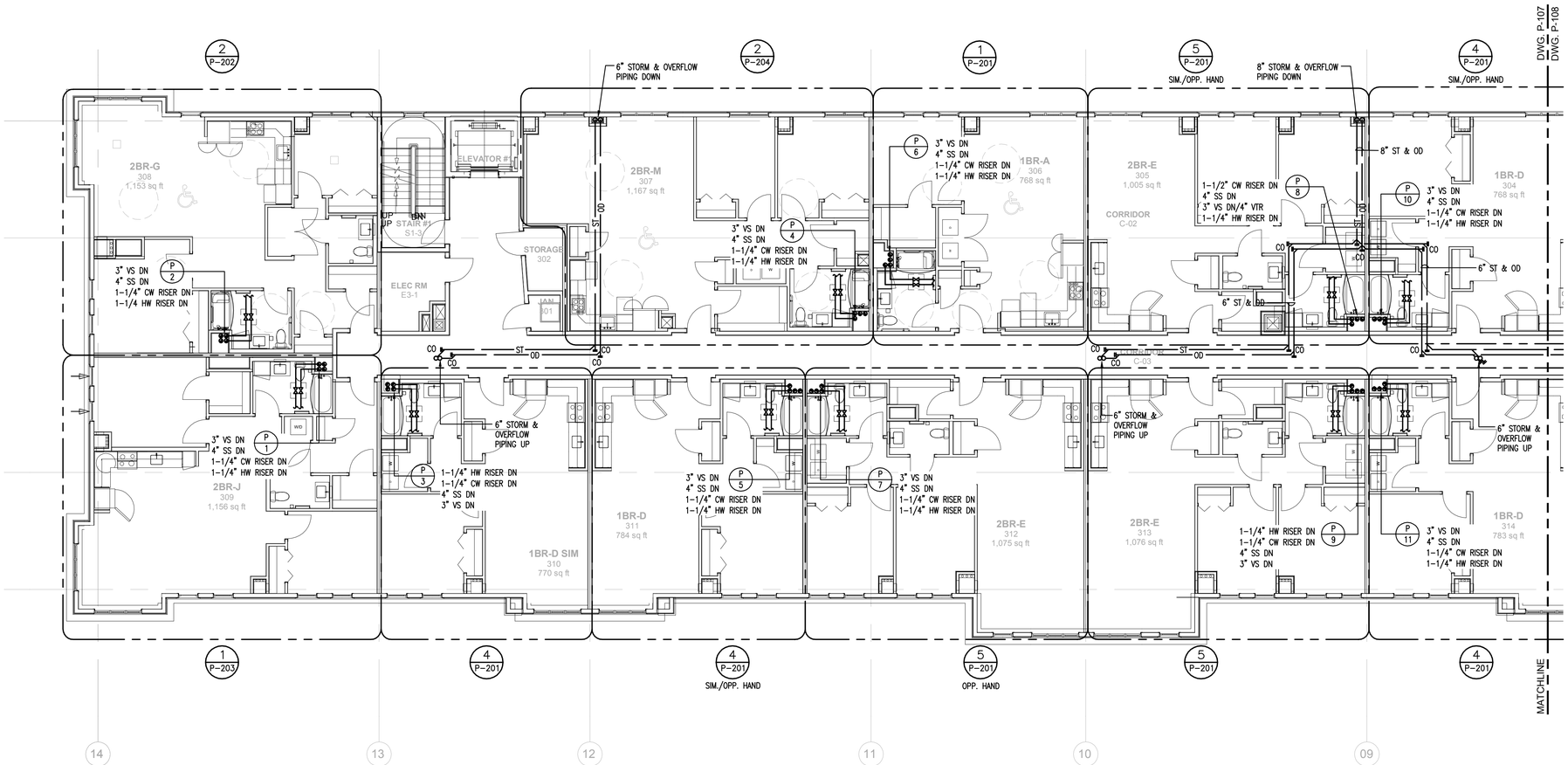

1 THIRD FLOOR PLAN (NORTH WING) - PLUMBING
SCALE: 1/8"=1'-0"

PROJECT NORTH

J:\Jobs\1323202.ME\PLUM\P-107 & P-108.dwg Sep 17, 2014 - 10:04pm tsp

Washington Village Phase 1

20 Day Street Building B

Norwalk, CT

Trinity Washington Village Limited Partnership
&
the Norwalk Housing Authority

E-ICON ARCHITECTURE
101 SUMMER ST BOSTON MA 02110
617-451-3333 www.iconarch.com

CONSULTANT
CENTEK engineering
Centered on Solutions ℠
www.CentekEng.com
(203) 488-0580
(203) 488-8587 Fax
63-2 North Branford Road, Branford, CT 06405

STAMP



KEYPLAN

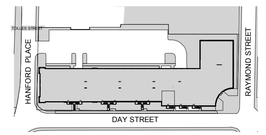

BUILDING B

N 0 4' 8' 16'

MARK	DATE	DESCRIPTION
	09-15-2014	PERMIT/ PRICING
	06-13-2014	PRICING
	11-18-2013	40% CHFA
	09-19-2013	CAM/ SPECIAL PERMIT

PROJECT NO.: 21222/CENTEK #13232.02
DRAWN BY: SAO/TSP
CHECKED BY: FRC

SHEET TITLE

BUILDING B
THIRD FLOOR
PLAN (NORTH WING) -
PLUMBING

P-107

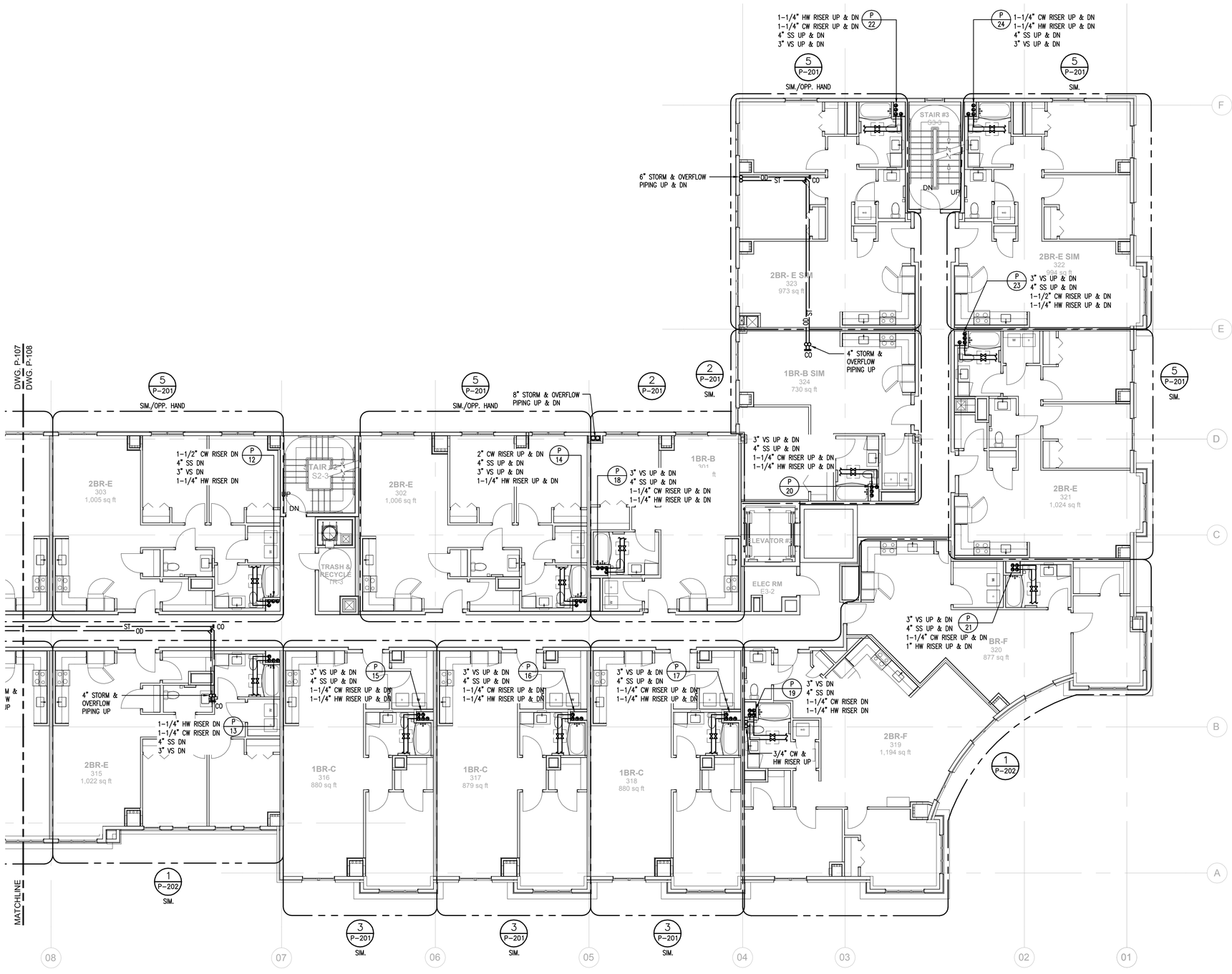

1 THIRD FLOOR PLAN (SOUTH WING) - PLUMBING
SCALE: 1/8"=1'-0"

PROJECT NORTH

Washington Village Phase 1

20 Day Street Building B

Norwalk, CT

Trinity Washington Village Limited Partnership
&
the Norwalk Housing Authority

E-ICON ARCHITECTURE
101 SUMMER ST BOSTON MA 02110
617-451-3333 www.iconarch.com

CONSULTANT
CENTEK engineering
Centered on Solutions SM
www.CentekEng.com
(203) 488-0580
(203) 488-8587 Fax
63-2 North Branford Road, Branford, CT 06405

STAMP



KEYPLAN

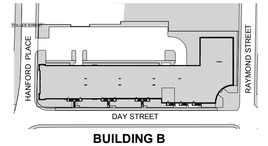

BUILDING B

N 0 4' 8' 16'

MARK	DATE	DESCRIPTION
	09-15-2014	PERMIT/ PRICING
	06-13-2014	PRICING
	11-18-2013	40% CHFA
	09-19-2013	CAM/ SPECIAL PERMIT

PROJECT NO.: 21222/CENTEK #13232.02
DRAWN BY: SAO/TSP
CHECKED BY: FRC

SHEET TITLE

BUILDING B
THIRD FLOOR
PLAN (SOUTH WING) -
PLUMBING

P-108

J:\Jobs\1323202.ME\PLUM\P-107 & P-108.dwg Sep 17, 2014 - 10:10pm tsp

PLUMBING WORK NOTES

GENERAL NOTE:

1. COORDINATE ALL WORK WITH ALL OTHER TRADES. REFER TO OTHER TRADE'S DRAWINGS FOR ADDITIONAL INFORMATION.

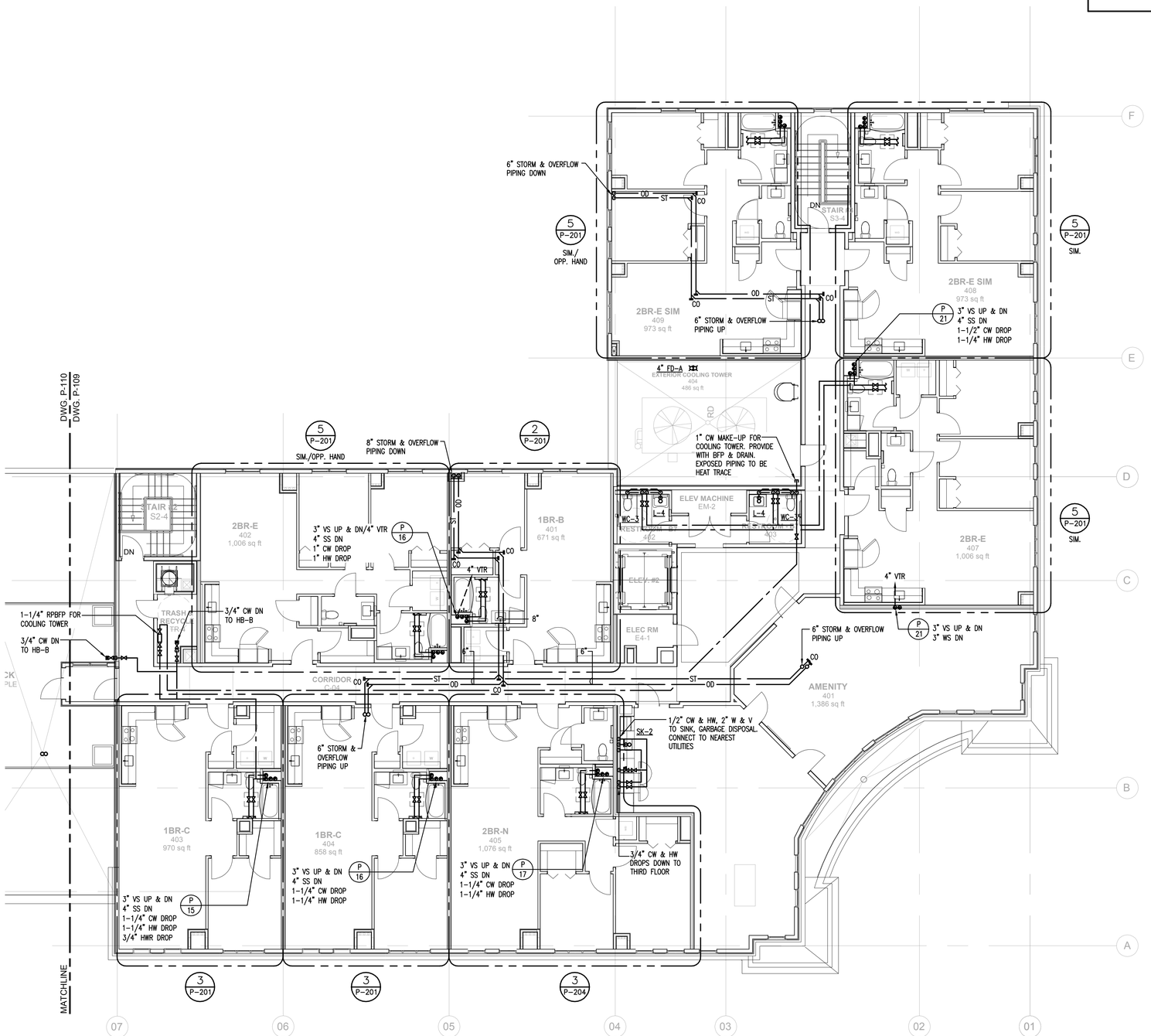

1 **FOURTH FLOOR PLAN (SOUTH WING) - PLUMBING**
SCALE: 1/8"=1'-0"

PROJECT NORTH

Washington Village Phase 1

20 Day Street Building B

Norwalk, CT

Trinity Washington Village Limited Partnership
&
the Norwalk Housing Authority

E-ICON ARCHITECTURE
101 SUMMER ST BOSTON MA 02110
617-451-3333 www.iconarch.com

CONSULTANT
CENTEK engineering
Centered on Solutions ℠
www.CentekEng.com
(203) 488-0580
(203) 488-8587 Fax
63-2 North Branford Road, Branford, CT 06405

STAMP



KEYPLAN

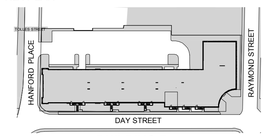

BUILDING B

N 0 8' 8' 16'

MARK	DATE	DESCRIPTION
	09-15-2014	PERMIT/ PRICING
	06-13-2014	PRICING
	11-18-2013	40% CHFA
	09-19-2013	CAM/ SPECIAL PERMIT

PROJECT NO.: 21222/CENTEK #13232.02
DRAWN BY: SAO/TSP
CHECKED BY: FRC

SHEET TITLE

BUILDING B
FOURTH FLOOR
PLAN (SOUTH WING) -
PLUMBING

P-109

J:\Jobs\1323202.MEP\PLUM\P-109.dwg Sep 17, 2014 - 10:10pm tsp

PLUMBING WORK NOTES

1. 4" VTR
2. 6" RD-A
3. 4" RD-A

GENERAL NOTE:

1. COORDINATE ALL WORK WITH ALL OTHER TRADES. REFER TO OTHER TRADE'S DRAWINGS FOR ADDITIONAL INFORMATION.

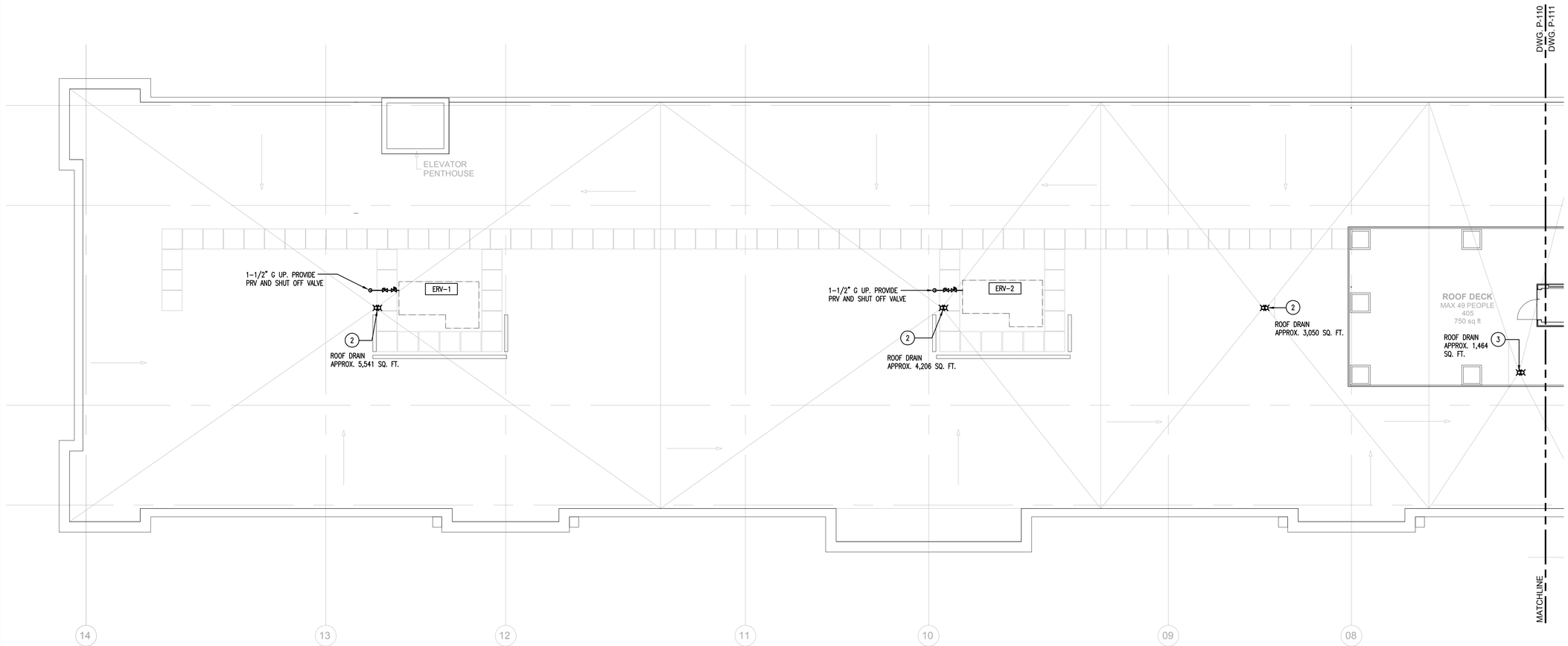

1 **ROOF PLAN (NORTH WING) - PLUMBING**
SCALE: 1/8"=1'-0"

PROJECT NORTH

Washington Village Phase 1

20 Day Street Building B

Norwalk, CT

Trinity Washington Village Limited Partnership
&
the Norwalk Housing Authority

E-ICON ARCHITECTURE
101 SUMMER ST BOSTON MA 02110
617-451-3333 www.iconarch.com

CONSULTANT
CENTEK engineering
Centered on Solutions ℠
www.CentekEng.com
(203) 488-0580
(203) 488-8587 Fax
63-2 North Branford Road, Branford, CT 06405

STAMP



KEYPLAN

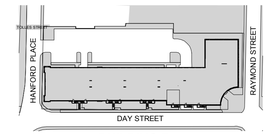

BUILDING B

N 0 4' 8' 16'

MARK	DATE	DESCRIPTION
	09-15-2014	PERMIT/ PRICING
	06-13-2014	PRICING
	11-18-2013	40% CHFA
	09-19-2013	CAM/ SPECIAL PERMIT

PROJECT NO.: 21222/CENTEK #13232.02
DRAWN BY: SAO/TSP
CHECKED BY: FRC

SHEET TITLE

BUILDING B
ROOF PLAN (NORTH WING) - PLUMBING

P-110

J:\Jobs\13232002.MEP\PLUM\P-110 & P-111.dwg Sep 17, 2014 - 10:11pm tsp

PLUMBING WORK NOTES

(1) 4" VTR
(2) 6" RD-A

GENERAL NOTE:

1. COORDINATE ALL WORK WITH ALL OTHER TRADES. REFER TO OTHER TRADE'S DRAWINGS FOR ADDITIONAL INFORMATION.

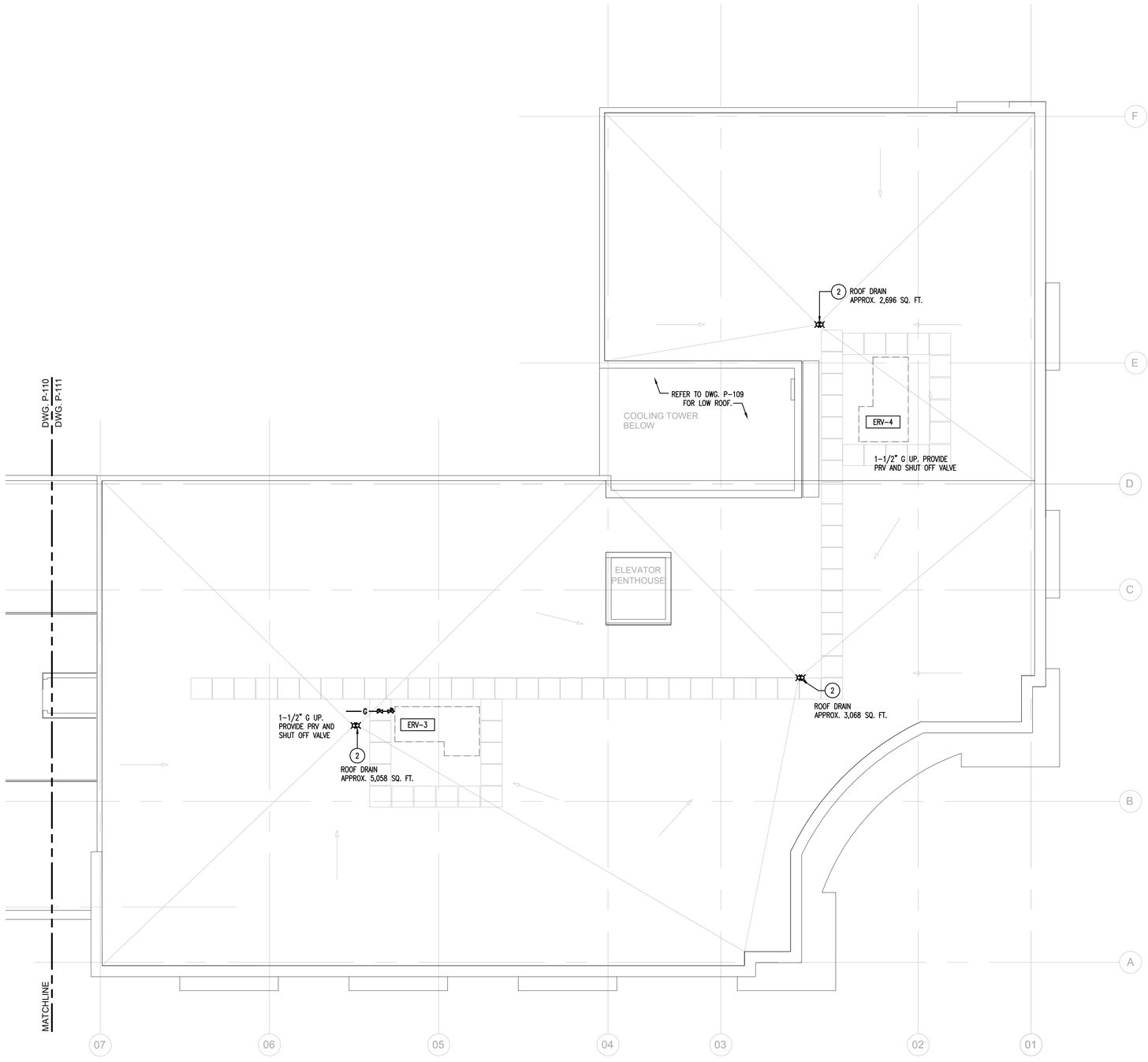

1 **ROOF PLAN (SOUTH WING) - PLUMBING**
SCALE: 1/8"=1'-0"

PROJECT NORTH

Washington Village Phase 1

20 Day Street Building B

Norwalk, CT

Trinity Washington Village Limited Partnership
&
the Norwalk Housing Authority

E-ICON ARCHITECTURE
101 SUMMER ST BOSTON MA 02110
617-451-3333 www.iconarch.com

CONSULTANT
CENTEK engineering
Centered on Solutions ℠
www.CentekEng.com
(203) 488-0580
(203) 488-8587 Fax
63-2 North Branford Road, Branford, CT 06405

STAMP



KEYPLAN

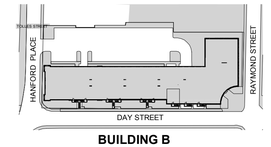

MARK	DATE	DESCRIPTION
	09-15-2014	PERMIT/ PRICING
	06-13-2014	PRICING
	11-18-2013	40% CHFA
	09-19-2013	CAM/ SPECIAL PERMIT

PROJECT NO.: 21222/CENTEK #13232.02
DRAWN BY: SAO/TSP
CHECKED BY: FRC

SHEET TITLE

BUILDING B ROOF PLAN (SOUTH WING) - PLUMBING

P-111

J:\Jobs\1323202\MEP\PLUM\P-110 & P-111.dwg Sep 17, 2014 - 10:11pm tsp

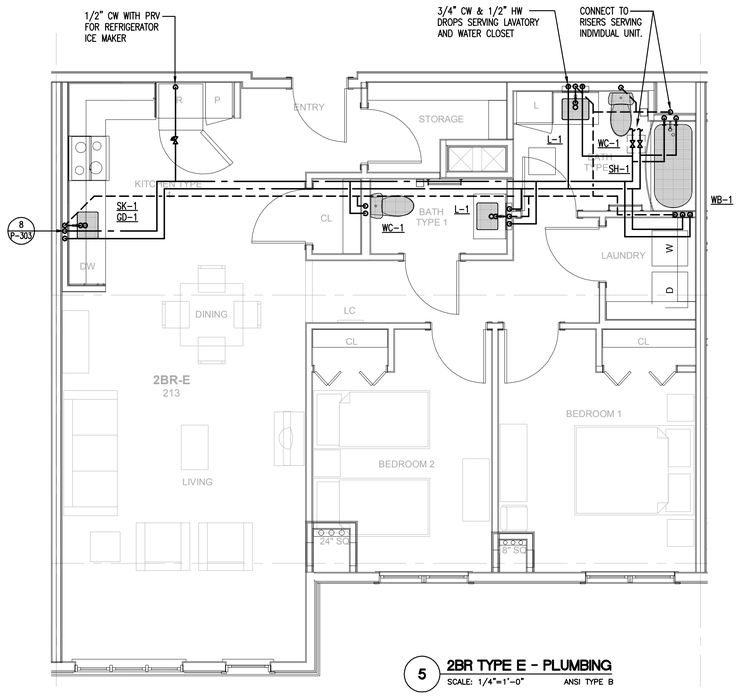

5 **2BR TYPE E - PLUMBING**
SCALE: 1/4"=1'-0" ANSI TYPE B

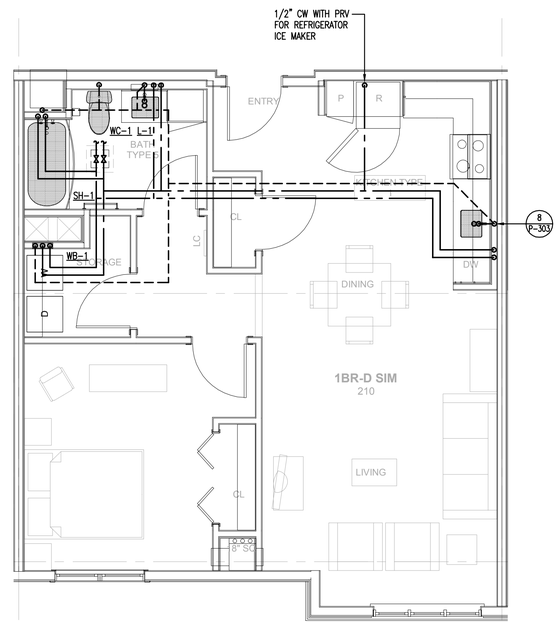

4 **1BR TYPE D - PLUMBING**
SCALE: 1/4"=1'-0" ANSI TYPE B

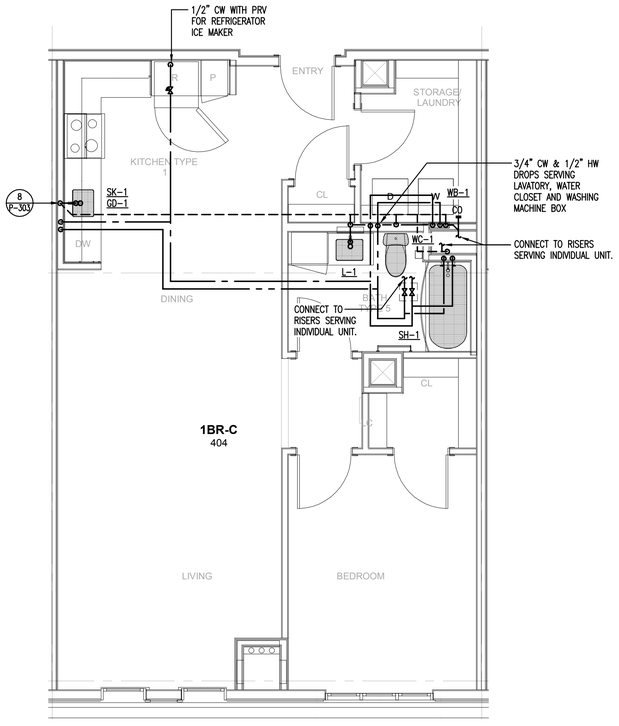

3 **1BR TYPE C - PLUMBING**
SCALE: 1/4"=1'-0" ANSI TYPE B

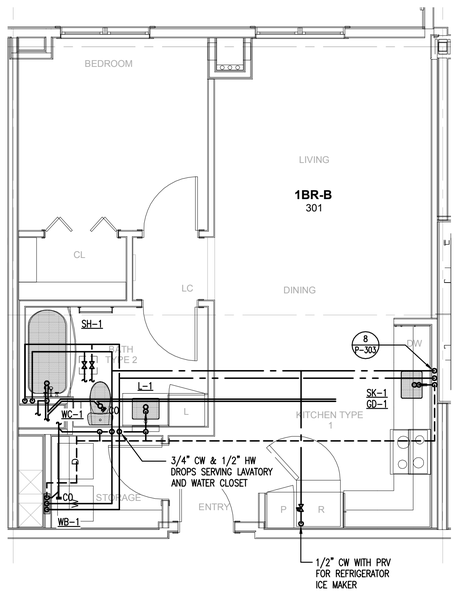

2 **1BR TYPE B - PLUMBING**
SCALE: 1/4"=1'-0" ANSI TYPE B

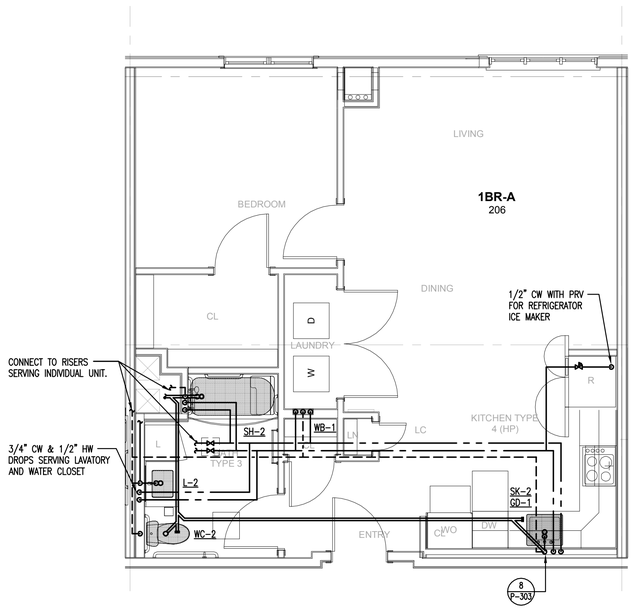

1 **1BR TYPE A - PLUMBING**
SCALE: 1/4"=1'-0" ANSI TYPE A

PROJECT NORTH

Washington Village Phase 1

20 Day Street Building B

Norwalk, CT

Trinity Washington Village Limited Partnership
&
the Norwalk Housing Authority

E-ICON ARCHITECTURE
101 SUMMER ST BOSTON MA 02110
617-451-3333 www.iconarch.com

CONSULTANT
CENTEK engineering
Centered on Solutions ℠
www.CentekEng.com
(203) 488-0580
(203) 488-8587 Fax
63-2 North Branford Road, Branford, CT 06405

STAMP



KEYPLAN

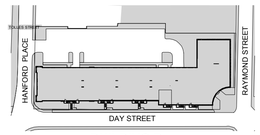

BUILDING B

N 0 2' 4' 8'

MARK	DATE	DESCRIPTION
	09-15-2014	PERMIT/ PRICING
	06-13-2014	PRICING
	11-18-2013	40% CHFA
	09-19-2013	CAM/ SPECIAL PERMIT

PROJECT NO.: 21222/CENTEK #13232.02
DRAWN BY: SAO/TSP
CHECKED BY: FRC

SHEET TITLE

TYPICAL UNIT PLANS
BUILDING B
PLUMBING

P-201

J:\Jobs\1323202.ME\PLUMVP-201.dwg Sep 17, 2014 - 10:12pm tsp

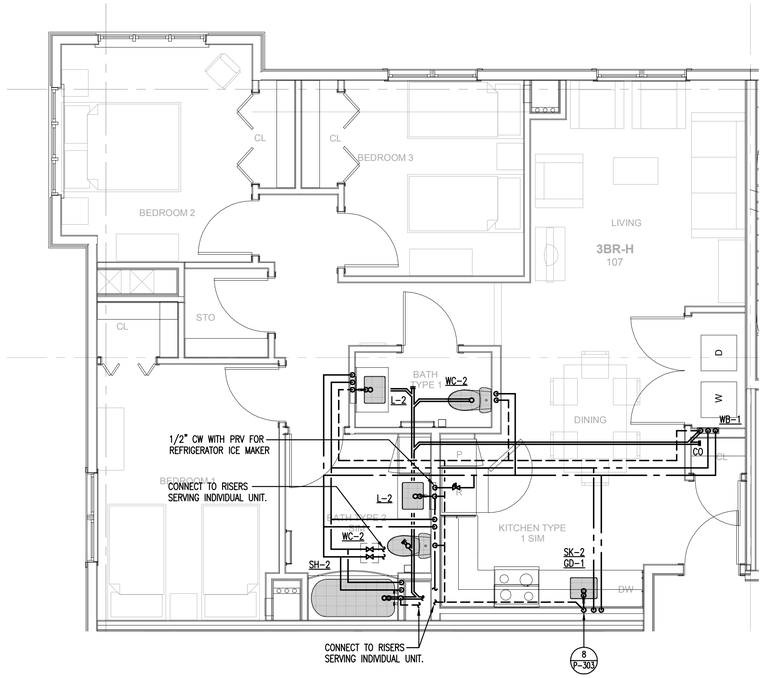

3 3BR TYPE H - PLUMBING

SCALE: 1/4"=1'-0" ANSI TYPE A

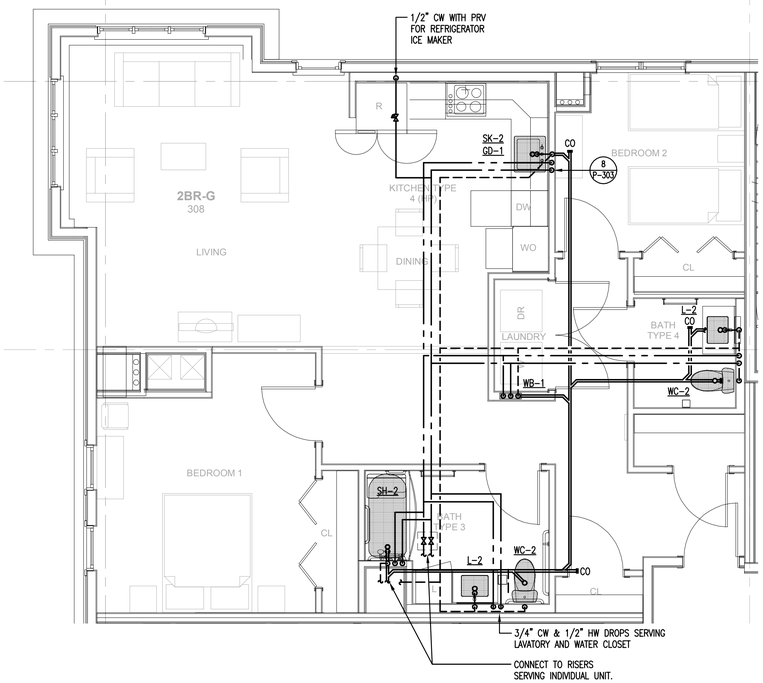

2 2BR TYPE G - PLUMBING

SCALE: 1/4"=1'-0" ANSI TYPE A

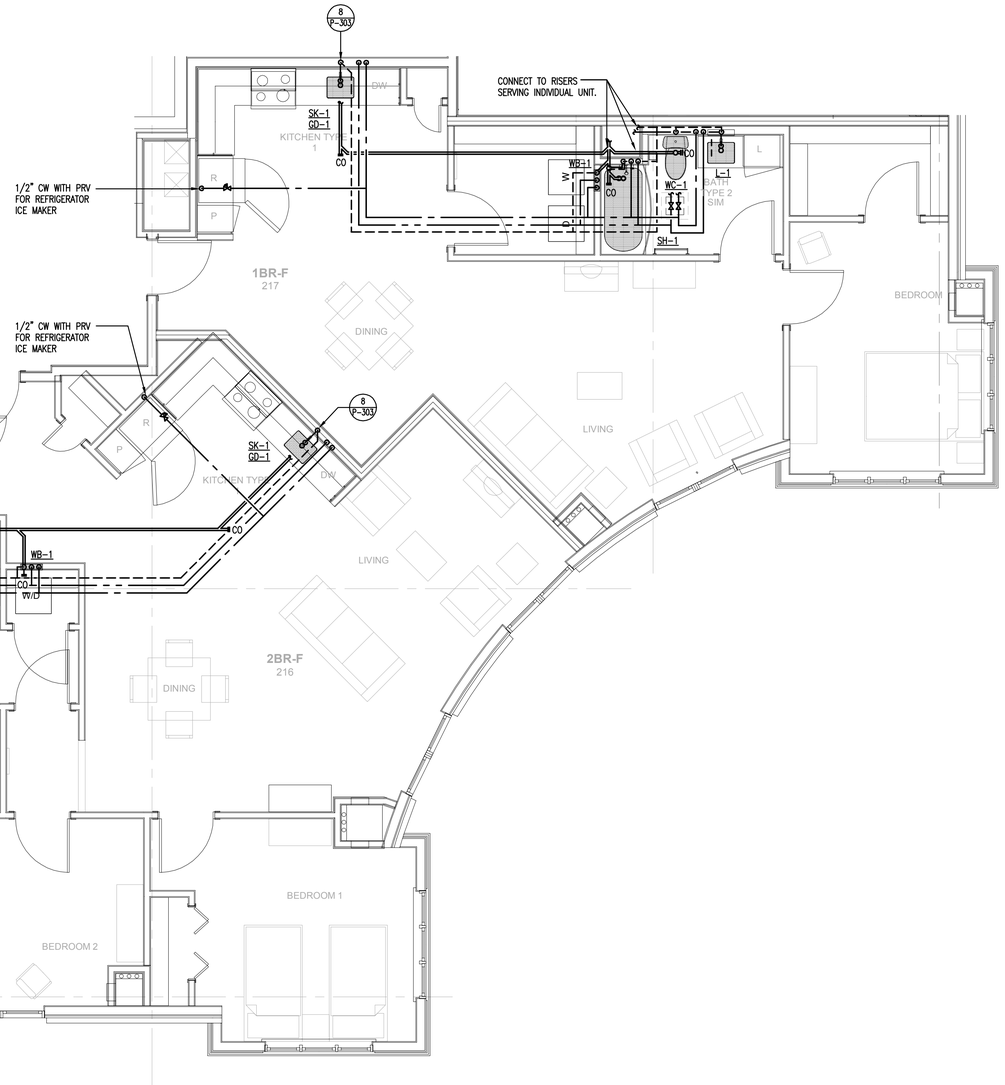

1 2BR ARC PAIR TYPE F - PLUMBING

SCALE: 1/4"=1'-0" ANSI TYPE B

PROJECT NORTH

J:\Jobs\1323202.MEP\PLUMP-202.dwg Sep 17, 2014 - 10:12pm tsp

Washington Village Phase 1

20 Day Street Building B

Norwalk, CT

Trinity Washington Village Limited Partnership
&
the Norwalk Housing Authority

E-ICON ARCHITECTURE
101 SUMMER ST BOSTON MA 02110
617-451-3333 www.iconarch.com

CONSULTANT

CENTEK engineering
Centered on Solutions ℠
www.CentekEng.com
(203) 488-0580
(203) 488-8587 Fax
63-2 North Branford Road, Branford, CT 06405

STAMP



KEYPLAN

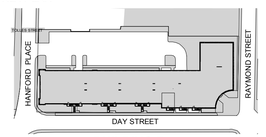

BUILDING B

N 0 2' 4' 8'

MARK	DATE	DESCRIPTION
	09-15-2014	PERMIT/ PRICING
	06-13-2014	PRICING
	11-18-2013	40% CHFA
	09-19-2013	CAM/ SPECIAL PERMIT

PROJECT NO.: 21222/CENTEK #13232.02
DRAWN BY: SAO/TSP
CHECKED BY: FRC

SHEET TITLE

TYPICAL UNIT PLANS
BUILDING B
PLUMBING

P-202

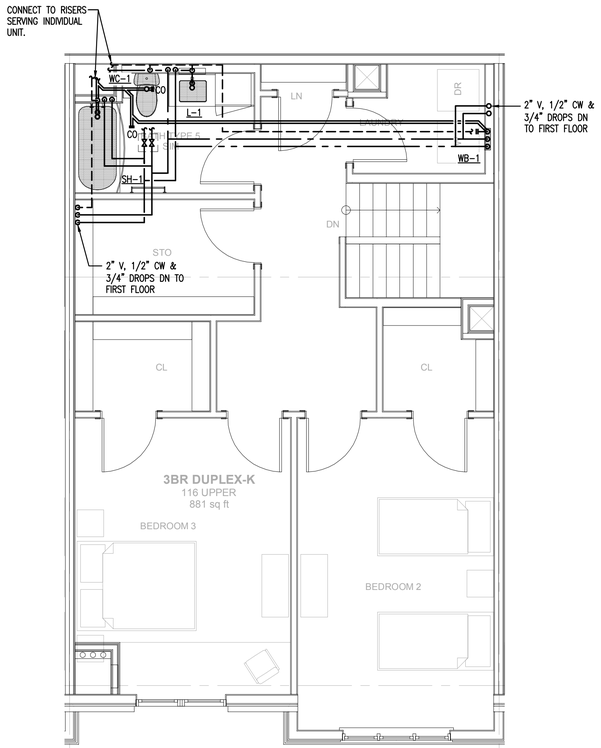

3 **3BR DUPLEX TYPE K (UPPER LEVEL) - PLUMBING**
SCALE: 1/4"=1'-0" ANSI TYPE B

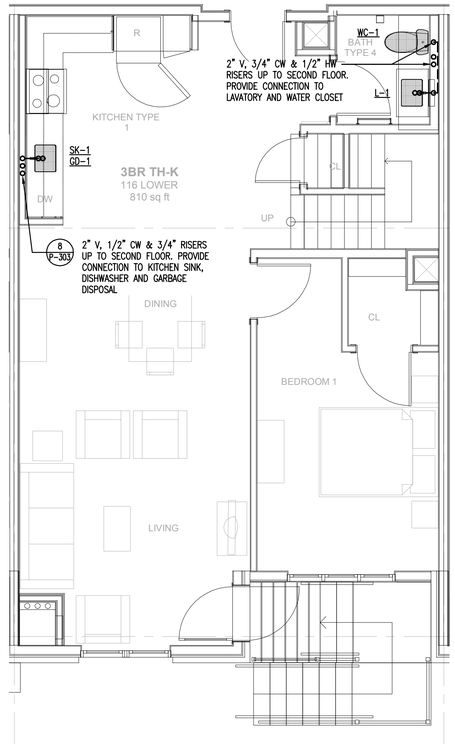

2 **3BR DUPLEX TYPE K (LOWER LEVEL) - PLUMBING**
SCALE: 1/4"=1'-0" ANSI TYPE B

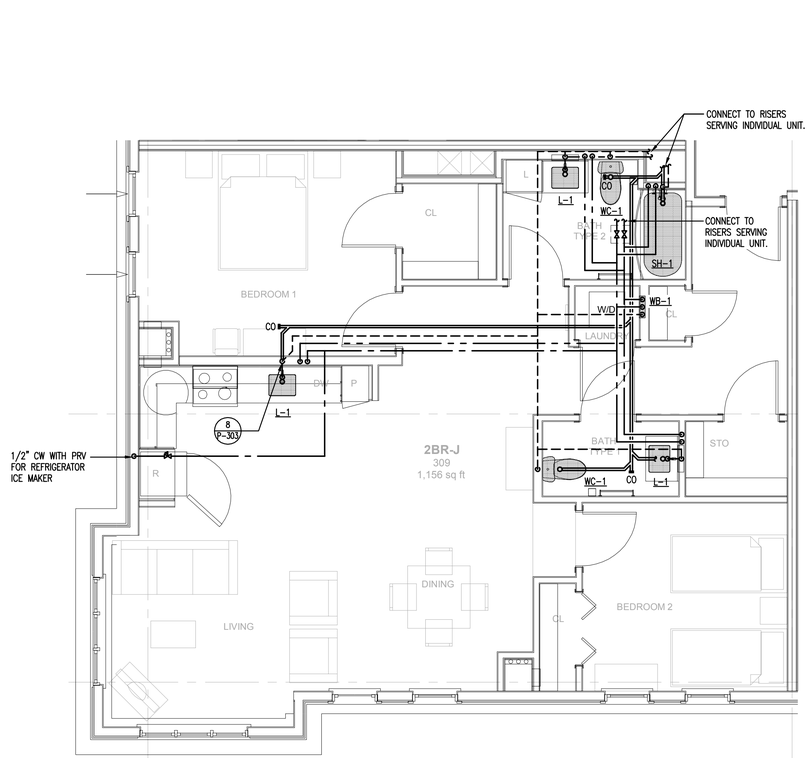

1 **2BR TYPE J - PLUMBING**
SCALE: 1/4"=1'-0" ANSI TYPE B

PROJECT NORTH

J:\Jobs\1323202.ME\PLUM\P-203.dwg Sep 17, 2014 - 10:12pm tsp

Washington Village Phase 1

20 Day Street Building B

Norwalk, CT

Trinity Washington Village Limited Partnership
&
the Norwalk Housing Authority

E-ICON ARCHITECTURE
101 SUMMER ST BOSTON MA 02110
617-451-3333 www.iconarch.com

CONSULTANT

CENTEK engineering
Centered on Solutions ℠
www.CentekEng.com
(203) 488-0580
(203) 488-8587 Fax
63-2 North Branford Road, Branford, CT 06405

STAMP



KEYPLAN

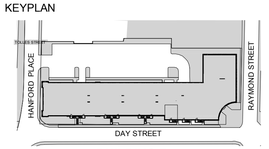

BUILDING B

N 0 2' 4' 8'

MARK	DATE	DESCRIPTION
	09-15-2014	PERMIT/ PRICING
	06-13-2014	PRICING
	11-18-2013	40% CHFA
	09-19-2013	CAM/ SPECIAL PERMIT

PROJECT NO.: 21222/CENTEK #13232.02
DRAWN BY: SAO/TSP
CHECKED BY: FRC

SHEET TITLE

TYPICAL UNIT PLANS BUILDING B PLUMBING

P-203

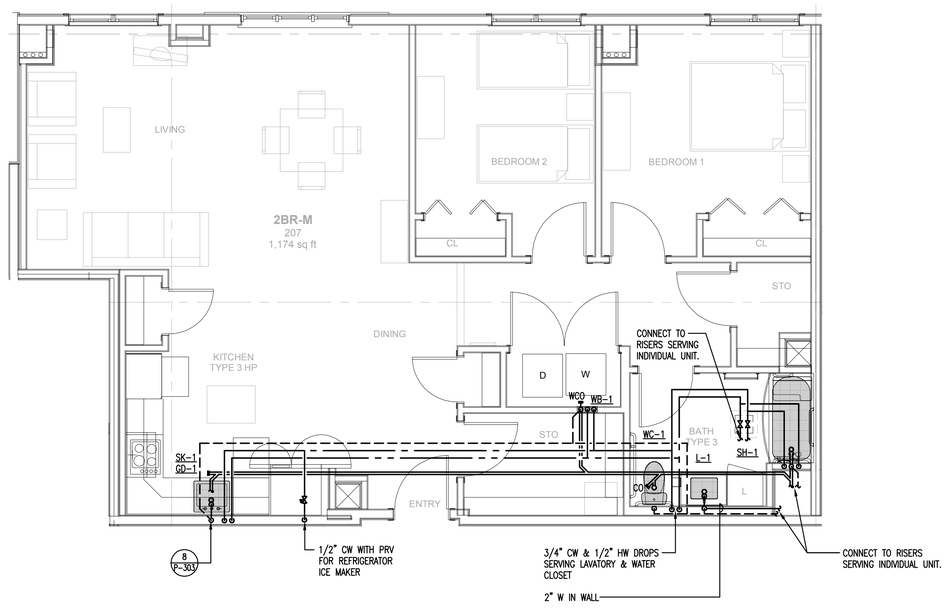

2 2BR TYPE M - PLUMBING
SCALE: 1/4"=1'-0"

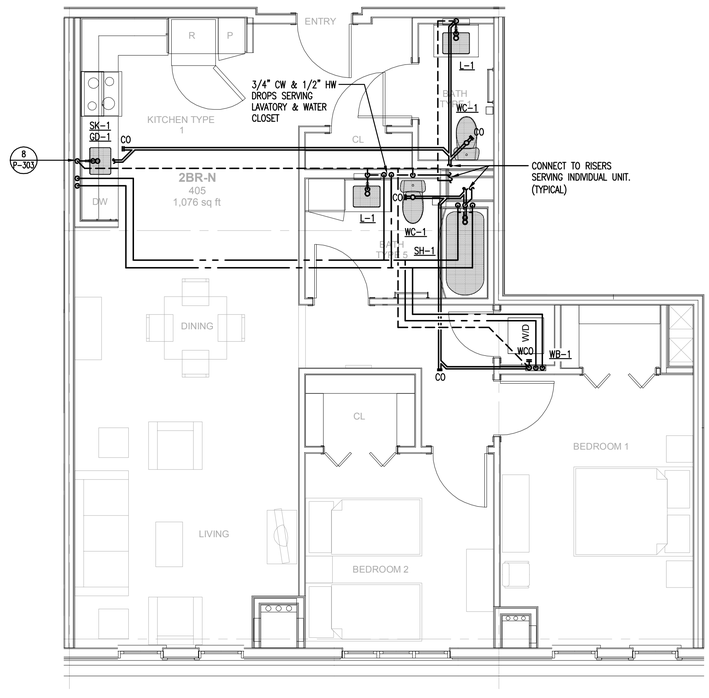

3 2BR TYPE N - PLUMBING
SCALE: 1/4"=1'-0"

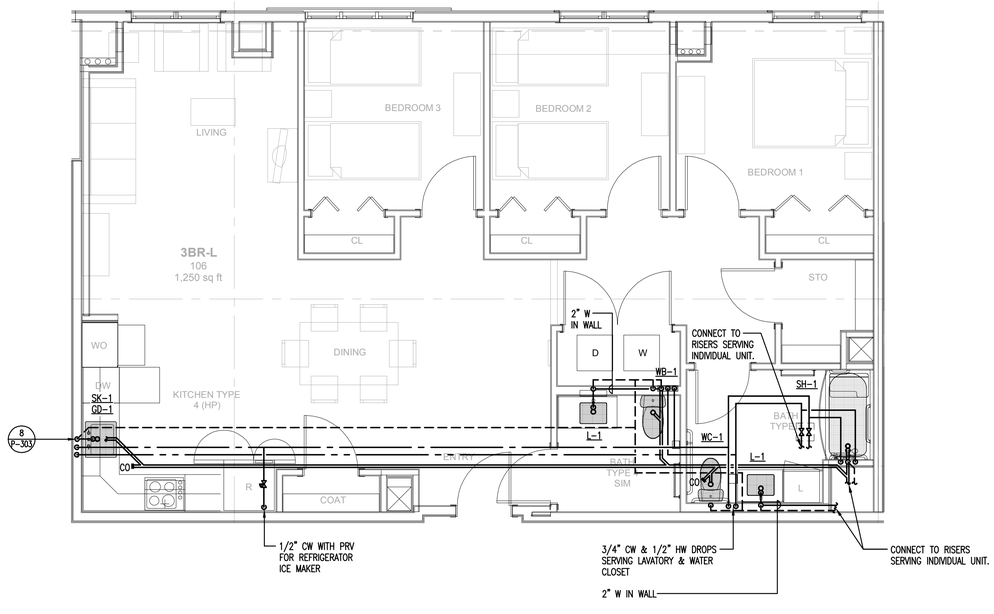

1 3BR TYPE L - PLUMBING
SCALE: 1/4"=1'-0"

PROJECT NORTH

J:\Jobs\1323202.MEP\PLUM\P-204.dwg Sep 17, 2014 - 10:13pm tsp

Washington Village Phase 1

20 Day Street Building B

Norwalk, CT

Trinity Washington Village Limited Partnership
&
the Norwalk Housing Authority

E-ICON ARCHITECTURE
101 SUMMER ST BOSTON MA 02110
617-451-3333 www.iconarch.com

CONSULTANT
CENTEK engineering
Centered on Solutions ℠
www.CentekEng.com
(203) 488-0580
(203) 488-8587 Fax
63-2 North Branford Road, Branford, CT 06405

STAMP



KEYPLAN

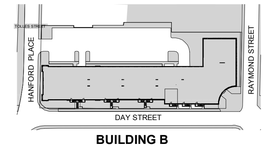

MARK	DATE	DESCRIPTION
	09-15-2014	PERMIT/ PRICING
	06-13-2014	PRICING
	11-18-2013	40% CHFA
	09-19-2013	CAM/ SPECIAL PERMIT

PROJECT NO.:	21222/CENTEK #13232.02
DRAWN BY:	SAO/TSP
CHECKED BY:	FRC

SHEET TITLE

TYPICAL UNIT PLANS BUILDING B PLUMBING

P-204

NOTES:
1. FIRESTOP SEALANTS AND PIPING PENETRATIONS THROUGH FIRE RATED ASSEMBLIES SHALL COMPLY WITH THE UL FIRE RESISTANCE DIRECTORY.
2. DETAIL IS BASED ON UL SYSTEM #254.

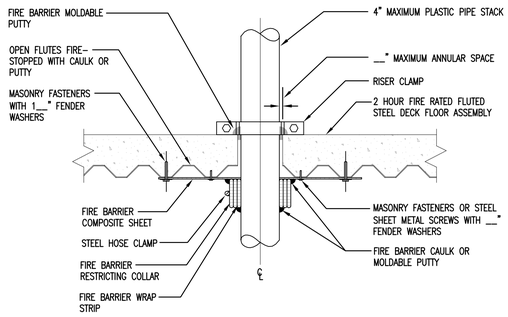

1 TYPICAL PLASTIC PIPE SLAB PENETRATION AND RISER SUPPORT SLEEVE DETAIL
N.T.S.

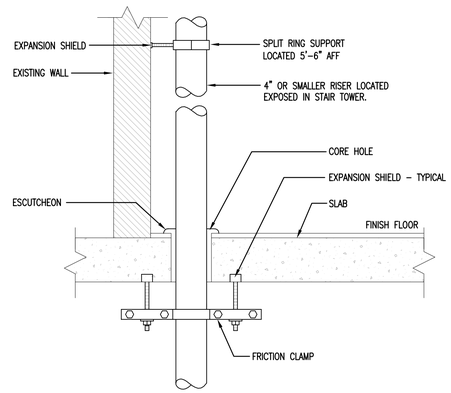

2 TYPICAL RISER SUPPORT THROUGH EXPOSED FINISH FLOOR
N.T.S.

NOTE:
FIRESTOP SEALANTS AND PIPING PENETRATIONS THROUGH FIRE RATED ASSEMBLIES SHALL COMPLY WITH THE UL FIRE RESISTANCE DIRECTORY.

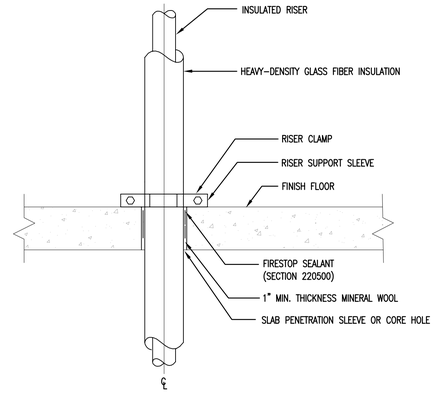

3 TYPICAL INSULATED PIPE SLAB PENETRATION SLEEVE DETAIL
N.T.S.

NOTE:
FIRESTOP SEALANTS AND PIPING PENETRATIONS THROUGH FIRE RATED ASSEMBLIES SHALL COMPLY WITH THE UL FIRE RESISTANCE DIRECTORY.

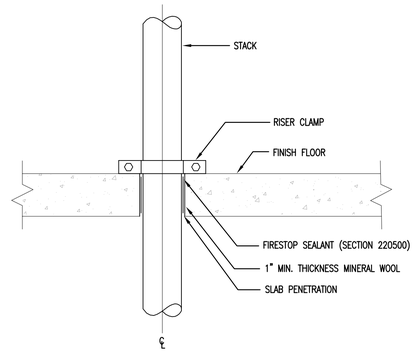

4 TYPICAL FIRE RATED PIPE SLAB PENETRATION DETAIL
N.T.S.

NOTE:
FIRESTOP SEALANTS AND PIPING PENETRATIONS THROUGH FIRE RATED ASSEMBLIES SHALL COMPLY WITH THE UL FIRE RESISTANCE DIRECTORY.

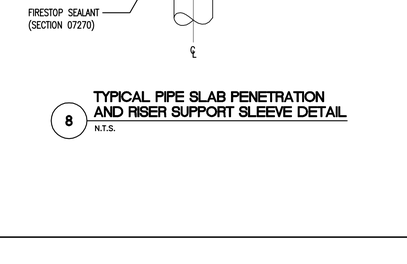

5 FIRE RATED PIPE SLAB PENETRATION AND RISER SUPPORT SLEEVE DETAIL
N.T.S.

6 WATERPROOF SLEEVE
N.T.S.

NOTES:
1. FIRESTOP SEALANTS AND PIPING PENETRATIONS THROUGH FIRE RATED ASSEMBLIES SHALL COMPLY WITH THE UL FIRE RESISTANCE DIRECTORY.
2. DETAIL IS BASED ON UL SYSTEM #254.

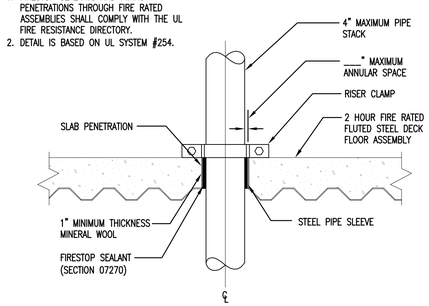

8 TYPICAL PIPE SLAB PENETRATION AND RISER SUPPORT SLEEVE DETAIL
N.T.S.

NOTE: ALL INLET AND OUTLET PIPING TAKE-OFFS SHALL BE EQUAL

7 WATER HEATER SYSTEM
N.T.S.

Washington Village Phase 1

20 Day Street Building B

Norwalk, CT

Trinity Washington Village Limited Partnership
&
the Norwalk Housing Authority

E-ICON ARCHITECTURE
101 SUMMER ST BOSTON MA 02110
617-451-3333 www.iconarch.com

CONSULTANT
CENTEK engineering
Centered on Solutions ℠
www.CentekEng.com
(203) 488-0580
(203) 488-8587 Fax
63-2 North Branford Road, Branford, CT 06405

STAMP



KEYPLAN

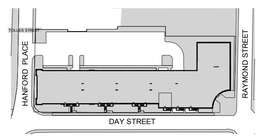

BUILDING B

N

MARK	DATE	DESCRIPTION
	09-15-2014	PERMIT/ PRICING
	06-13-2014	PRICING
	11-18-2013	40% CHFA
	09-19-2013	CAM/ SPECIAL PERMIT

PROJECT NO.: 21222/CENTEK #13232.02
DRAWN BY: SAO/TSP
CHECKED BY: FRC

SHEET TITLE

PLUMBING DETAILS

P-301

J:\Jobs\1323202.ME\PLUMP-301.dwg Sep 17, 2014 - 10:13pm tsp

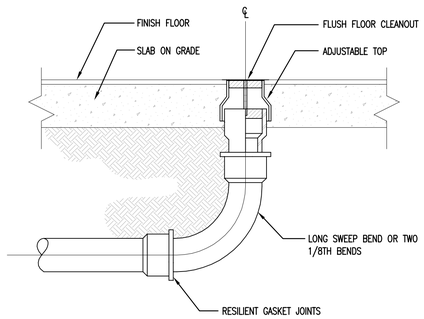

1 **FLUSH FLOOR CLEANOUT**
N.T.S.

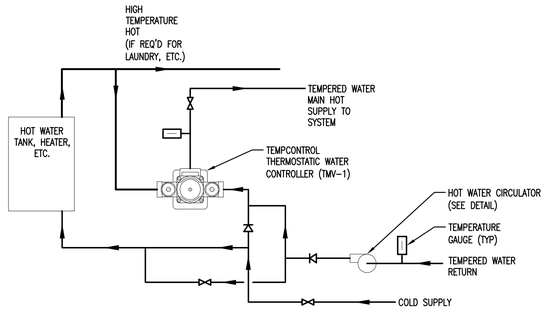

2 **MASTER THERMOSTATIC MIXING VALVE ASSEMBLY**
N.T.S.

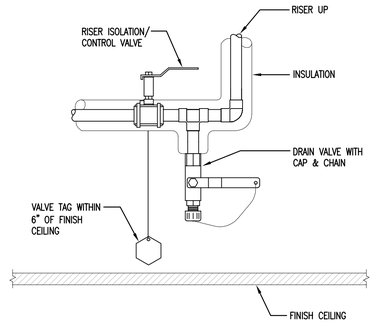

3 **RISER CONTROL AND DRAIN VALVE**
N.T.S.

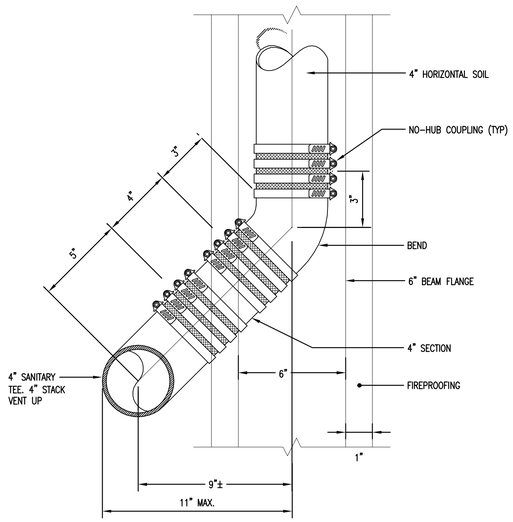

4 **SANITARY OFFSET AT BEAM**
N.T.S.

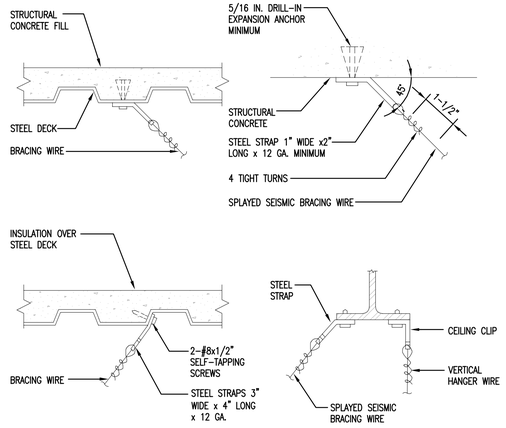

5 **SEISMIC CABLE RESTRAINT ATTACHMENTS**
N.T.S.

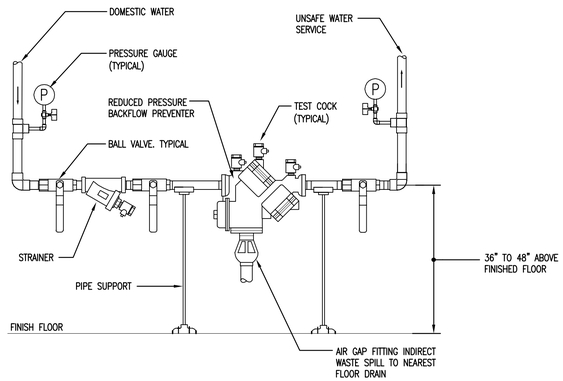

6 **REDUCED PRESSURE BACKFLOW PREVENTER**
N.T.S.

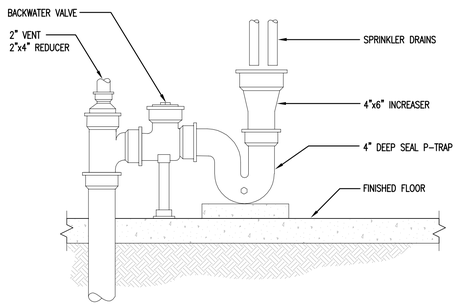

7 **SPRINKLER WASTE RECEIVER**
N.T.S.

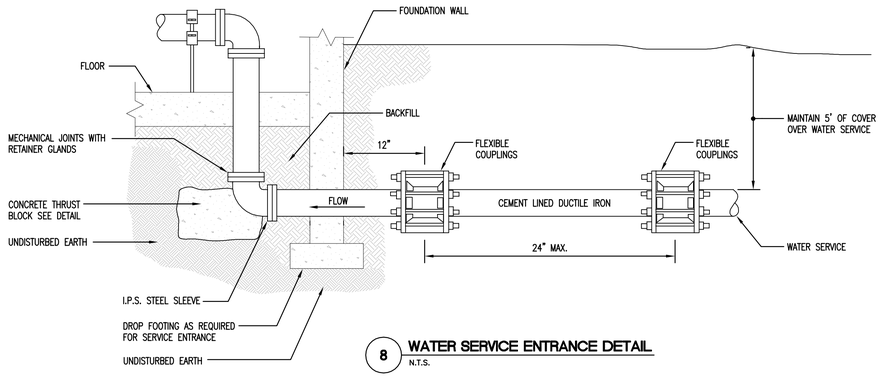

8 **WATER SERVICE ENTRANCE DETAIL**
N.T.S.

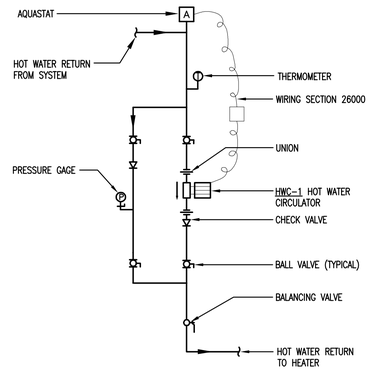

NOTE: HOT WATER CIRCULATOR PUMP TO BE TACO MODEL 0013, OR APPROVED EQUAL.

9 **PIPING DIAGRAM AT HOT WATER CIRCULATOR**
N.T.S.

J:\Jobs\1323202.ME\PLUM\P-302.dwg Sep 17, 2014 - 10:14pm tsp

Washington Village Phase 1

20 Day Street Building B

Norwalk, CT

Trinity Washington Village Limited Partnership
&
the Norwalk Housing Authority

E-ICON ARCHITECTURE
101 SUMMER ST BOSTON MA 02110
617-451-3333 www.iconarch.com

CONSULTANT

CENTEK engineering
Centered on Solutions ℠
www.CentekEng.com
(203) 488-0580
(203) 488-8587 Fax
63-2 North Branford Road, Branford, CT 06405

STAMP



KEYPLAN

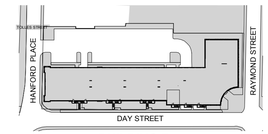

BUILDING B

N

MARK	DATE	DESCRIPTION
	09-15-2014	PERMIT/ PRICING
	06-13-2014	PRICING
	11-18-2013	40% CHFA
	09-19-2013	CAM/ SPECIAL PERMIT

PROJECT NO.: 21222/CENTEK #13232.02
DRAWN BY: SAO/TSP
CHECKED BY: FRC

SHEET TITLE

PLUMBING DETAILS

P-302

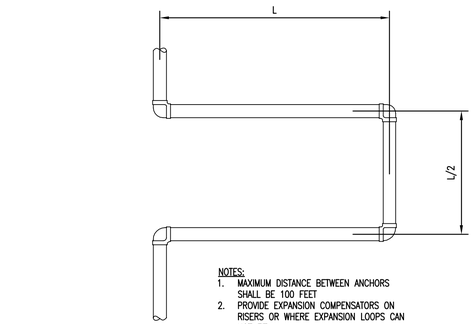

PIPE SIZE (IN)	DIMEN L (IN)
3/4	40
1	45
1 1/2	55
2	60
2 1/2	65
3	75

NOTES:
1. MAXIMUM DISTANCE BETWEEN ANCHORS SHALL BE 100 FEET
2. PROVIDE EXPANSION COMPENSATORS ON RISERS OR WHERE EXPANSION LOOPS CAN NOT FIT

1 EXPANSION LOOP
N.T.S.

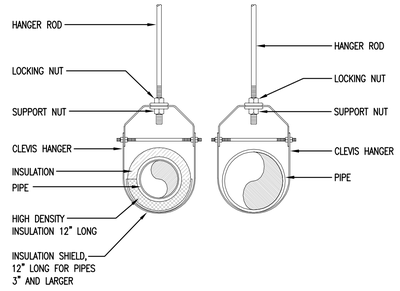

HANGER ROD SCHEDULE	
PIPE SIZE	ROD SIZE
UP TO 2"	3/8" DIA.
2-1/2" THRU 3"	1/2" DIA.
4" AND 5"	5/8"
6" THRU 8"	3/4"
12"	7/8"

HANGER ROD SPACING	
PIPE SIZE	MAX. ALLOWABLE SPACING
1"	7'
1 1/4"	8'
1 1/2"	9'
2"	10'
2 1/2"	11'
3" THRU 8"	12'
10" & 12"	15'

2 PLUMBING PIPE HANGER INSTALLATION DETAIL
N.T.S.

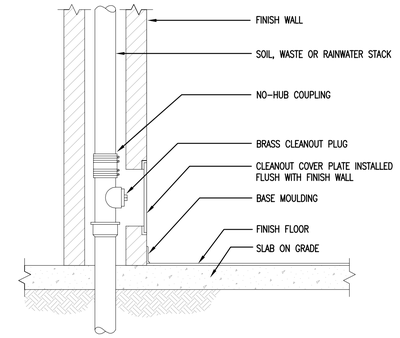

3 FLUSH WALL CLEANOUT
N.T.S.

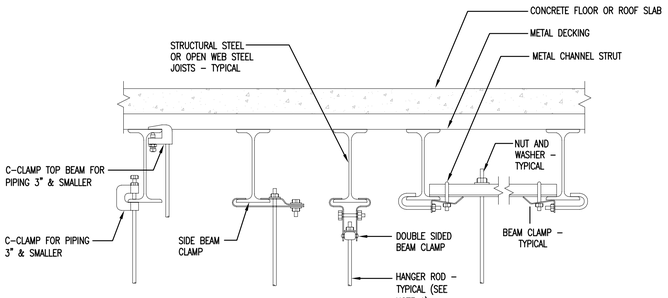

NOTE 1:
REFER TO PIPE HANGER DETAIL FOR HANGER ROD SIZE. FOR CEILING SUSPENDED EQUIPMENT PROVIDE MIN. 3/8" DIA. HANGER ROD (REFER TO MANUFACTURERS INSTALLATION INSTRUCTIONS).

4 TYPICAL METHODS OF SECURING HANGER RODS TO STRUCTURAL STEEL DETAIL
N.T.S.

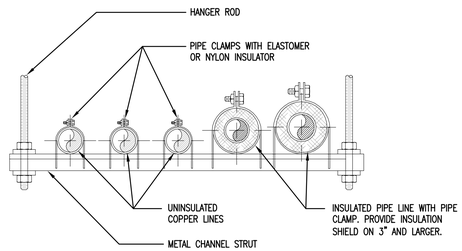

5 TRAPEZE PIPE HANGER
N.T.S.

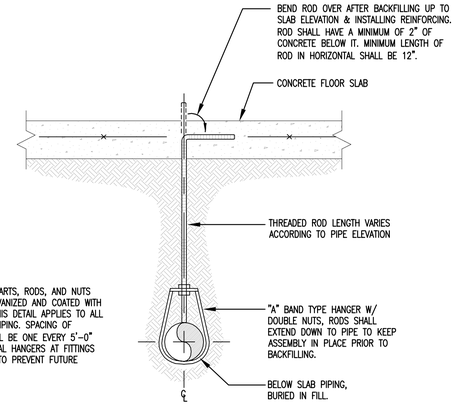

NOTE:
ALL HANGER PARTS, RODS, AND NUTS SHALL BE GALVANIZED AND COATED WITH ASPHALTUM. THIS DETAIL APPLIES TO ALL BELOW SLAB PIPING. SPACING OF HANGERS SHALL BE ONE EVERY 5'-0" PLUS ADDITIONAL HANGERS AT FITTINGS AS REQUIRED TO PREVENT FUTURE SETTLEMENT.

6 BELOW SLAB PIPE HANGER DETAIL
N.T.S.

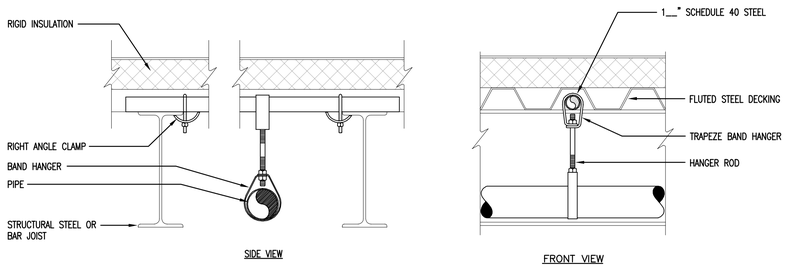

7 FLUTED DECK PIPE HANGER DETAIL
N.T.S.

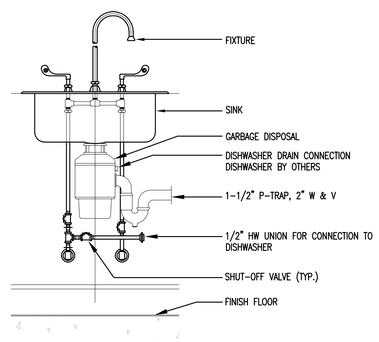

8 GARBAGE DISPOSAL DETAIL
N.T.S.

Washington Village Phase 1

20 Day Street Building B

Norwalk, CT

Trinity Washington Village Limited Partnership
&
the Norwalk Housing Authority

E-ICON ARCHITECTURE
101 SUMMER ST BOSTON MA 02110
617-451-3333 www.iconarch.com

CONSULTANT
CENTEK engineering
Centered on Solutions SM
www.CentekEng.com
(203) 488-0580
(203) 488-8587 Fax
63-2 North Branford Road, Branford, CT 06405

STAMP



KEYPLAN

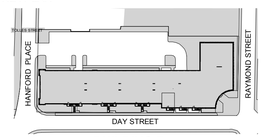

BUILDING B

N

MARK	DATE	DESCRIPTION
	09-15-2014	PERMIT/ PRICING
	06-13-2014	PRICING
	11-18-2013	40% CHFA
	09-19-2013	CAM/ SPECIAL PERMIT

PROJECT NO.: 21222/CENTEK #13232.02
DRAWN BY: SAO/TSP
CHECKED BY: FRC

SHEET TITLE

PLUMBING DETAILS

P-303

J:\Jobs\1323202.*ME\PLUM\P-303.dwg Sep 17, 2014 - 10:14pm tsp

VARIABLE FREQUENCY DRIVE SCHEDULE

NUMBER	DRIVEN EQUIPMENT	MHP	DRIVE TYPE	NUMBER OF PULSES INPUT	5% LINE REACTOR	LUGS OVERSIZED	ADDITIONAL DEVICES TO REDUCE HARMONICS (CURRENT AND VOLTAGE)	NOTES
VFD-1	HWP-1	25	PWM	6	YES	YES	AS REQUIRED TO MEET THE SPECIFIED	1
VFD-2	HWP-2	25	PWM	6	YES	YES	AS REQUIRED TO MEET THE SPECIFIED	1,2

NOTES:
1. PROVIDE INTERFACE FOR ATC AND COORDINATE INSTALLATION WITH ATC CONTRACTOR
2. STANDBY

UNIT HEATER SCHEDULE

UNIT NUMBER	LOCATION	FAN				MOTOR DATA @ 60 HZ				HOT WATER COIL				STEAM COIL		ELECTRIC COIL		SIMILAR TO	SEE NOTES BELOW	EMER POWER
		SPEED SETTING	CFM	RPM	EXT SP	HP	RPM	VOLTS	PHASE	EWT °F	LWT °F	GPM	△PRESS FT. H_2O	INLET PSIG	#/HR	VOLTS	KW			
UH-1	WATER RM	H	395	1550	.005	16W	1550	115	1	180	160	1.3	.005	–	–	–	–	BEACON MORRIS HB-18	ALL	NO
UH-2	WATER RM	H	750	1000	.005	1/20	1000	115	1	180	160	3.5	.005	–	–	–	–	BEACON MORRIS HB-48	ALL	NO

NOTES:
1. PROVIDE WITH REMOTE MOUNTED THERMOSTAT.

EXPANSION/COMPRESSION TANK SCHEDULE

UNIT NUMBER	LOCATION	SYSTEM SERVED	INITIAL CHARGE (PSIG)	TANK CAPACITY (GALLONS)	ACCEPTANCE (GALLONS)	STYLE	TANK HEIGHT (IN.) X DIA. (IN.)	TANK FITTING	RELIEF VALVE SETTING	REDUCING VALVE SETTING	NOTES
TK-1	MECHANICAL RM	CONDENSER WATER	12	44.4	22.6	VERTICAL	56"x16-1/4"	–	20 PSIG	12 PSIG	

CLOSED CIRCUIT COOLER SCHEDULE

UNIT NO.	NOM TONS	EWT °F	LWT °F	E.A.T. WB °F	GPM	QUANTITY OF FANS	MOTOR DATA					SELECTION BASED ON	NOTES
							HP	RPM	V	PH	HZ		
CT-1	238	100	90	76	750	2	10	–	208	3	60	EVAPCO ATWB 9-4L18	ALL

NOTES:
1. PROVIDE (2) 6KW BASIN HEATERS AND (2) 5 HP PUMP MOTORS.
2. SYSTEM SHALL BE FILLED WITH 30% GLYCOL.
3. PROVIDE 3 PROBE ELECTRONIC WATER LEVEL CONTROL PACKAGE.

HVAC GENERAL NOTES

GENERAL NOTES APPLICABLE TO ALL HVAC DRAWINGS

1. ALL DUCTWORK PENETRATING FIRE RATED WALLS SHALL HAVE FIRE DAMPERS AT EACH PENETRATION.
2. ALL DUCTWORK PENETRATING RATED FLOOR SLABS SHALL HAVE FIRE DAMPERS DAMPERS AT EACH PENETRATION.
3. EXACT LOCATION OF CEILING DIFFUSER, GRILLES, REGISTERS, ETC. TO BE COORDINATED WITH REFLECTED CEILING PLANS.
4. MINIMUM PIPING RUNOUTS TO REHEAT COILS SHALL BE 3/4".
5. HVAC CONTRACTOR SHALL PROVIDE ALL SHEET METAL AND PIPING TRANSITIONS TO DIFFUSERS, TERMINAL BOXES, COILS AND OTHER SIMILAR HVAC EQUIPMENT.
6. FOR EQUIPMENT QUANTITIES SCHEDULED, SEE PLANS. SCHEDULES DO NOT INDICATE EXACT QUANTITIES.
7. ALL EQUIPMENT SHALL BE INSTALLED IN ACCORDANCE WITH MANUFACTURER'S APPROVED PUBLISHED LITERATURE.
8. PROVIDE INSTRUMENTAL TEST HOLES IN DUCTWORK WHEREVER VOLUME DAMPERS ARE REQUIRED.
9. ALL WORK UNDER THIS SECTION SHALL BE COORDINATED WITH ALL OTHER TRADES BEFORE ANY INSTALLATION IS MADE.
10. EXACT LOCATIONS OF THERMOSTATS TO BE COORDINATED WITH ALL OTHER TRADES BEFORE ANY INSTALLATION IS MADE.
11. ALL EXPOSED EQUIPMENT (REGISTERS, GRILLES, DIFFUSERS, UNIT HEATERS, ETC.) SHALL HAVE COLORS SELECTED BY THE ARCHITECT UNLESS OTHERWISE NOTED. SEE SPECIFICATIONS.
12. ALL EQUIPMENT SHALL BE INSTALLED IN SUCH A WAY SO THAT LIGHTS DO NOT BLOCK ACCESS TO UNITS AND RELATED ACCESSORIES.
13. FURNISH ALL ACCESS PANELS FOR VALVES AND DAMPERS IN WALLS, CEILING AND FLOORS AS REQUIRED PER PLANS AND SPECIFICATIONS. ACTUAL NUMBERS TO BE FIELD DETERMINED – LOCATIONS TO BE APPROVED BY ARCHITECT.
14. ALL CONDENSATION DRAIN PIPING SHALL BE EQUIPPED WITH CLEANOUTS AT THE ENDS OF ALL HORIZONTAL MAINS, AT BASE OF EACH RISER AND AT EACH CHANGE OF DIRECTION.
15. ALL STRAINER/RELIEF VALVE DISCHARGE PIPING SHALL RUN TO 12" ABOVE NEAREST FLOOR DRAIN.
16. BRANCH DUCTS SERVING SUPPLY, RETURN OR EXHAUST GRILLES SHALL BE 2" LARGER (WIDER) THAN GRILLE NECK SIZE UNLESS NOTED OTHERWISE.
17. PROVIDE FLOW METERING STATIONS FOR HOT WATER PIPING TO FACILITATE HYDRONIC BALANCING AT EACH PUMP, AND ALL MAINS LEAVING MECHANICAL ROOMS. UNITS SHALL BE COMPLETE WITH BALANCING VALVES WITH MEMORY STOPS.
18. PROVIDE SEPARATE PROGRAMMABLE ENERGY STAR RATED THERMOSTAT FOR EACH ZONE INDICATED ON THE DRAWINGS.
19. PROVIDE 3/4" DRAIN VALVE WITH HOSE CONNECTION, CAP AND CHAIN AT BASE OF ALL PIPE RISERS AND SYSTEM LOW POINTS AND MANUAL AIR VENTS AT TOP OF ALL RISERS AND SYSTEM HIGH POINTS.
20. COORDINATE ALL STRUCTURAL SUPPORT PAD REQUIREMENTS WITH ARCHITECTURAL DRAWINGS FOR ALL EQUIPMENT REQUIRING SAME.
21. COORDINATE ALL WATER MAKEUP AND DRAIN REQUIREMENTS WITH PLUMBING DRAWINGS FOR ALL EQUIPMENT REQUIRING SAME.
22. COORDINATE ALL MOTOR, STARTER, DISCONNECT AND SMOKE DETECTOR REQUIREMENTS WITH ELECTRICAL DRAWINGS FOR ALL EQUIPMENT REQUIRING SAME.
23. DUCT DIMENSIONS SHOWN ON PLANS REFER TO INSIDE CLEAR DIMENSIONS.
24. PROVIDE ALL PIPE AND DUCT CONNECTIONS TO EQUIPMENT INDICATED ON THE ARCHITECTURAL DRAWINGS AND FOR EQUIPMENT FURNISHED NEW BY THE OWNER. COORDINATE REQUIREMENTS WITH ARCHITECT, OWNER & CONSTRUCTION MANAGER. REVIEW ALL DRAWINGS FOR THESE REQUIREMENTS AND ASCERTAIN THE EXACT SCOPE IN THE FIELD PRIOR TO SUBMITTING BIDS.
25. ALL APARTMENT IN-LINE AND CEILING EXHAUST FANS MUST BE ENERGY STAR CERTIFIED.
26. CENTRAL EXHAUST AND IN-LINE EXHAUST SYSTEMS SERVING APARTMENTS SHALL HAVE SELF-BALANCING DAMPERS AT EACH REGISTER, GRILLE OR HOOD.
27. CENTRAL EXHAUST FANS 1/16 HP AND LESS SHALL BE DIRECT DRIVE AND HAVE VARIABLE SPEED CONTROLLERS.
28. CENTRAL EXHAUST FANS GREATER THAN 1/16 HP AND LESS THAN 1 HP SHALL BE DIRECT DRIVE WITH ECM MOTORS AND VARIABLE SPEED CONTROLLERS.
29. CENTRAL EXHAUST FANS 1 HP AND LARGER SHALL HAVE NEMA PREMIUM EFFICIENCY MOTORS.
30. POWERED COMMON LAUNDRY VENTILATION SHALL BE INSTALLED WITH AUTOMATIC DEMAND CONTROL TO TURN OFF VENTILATION FANS WHEN NO DRYERS ARE OPERATING.
31. ALL AIR DEVICES PENETRATING CEILING/FLOOR OR CEILING/ROOF RATED ASSEMBLIES SHALL BE PROVIDED WITH CEILING RADIATION DAMPER INSTALLED IN ACCORDANCE WITH MANUFACTURER AND UL LISTING REQUIREMENTS

HVAC LEGEND

- CWS — CONDENSER WATER SUPPLY
- CWR — CONDENSER WATER RETURN
- HWS — HOT WATER SUPPLY
- HWR — HOT WATER RETURN
- D — DRAIN
- V — VENT
- RS — REFRIGERANT SUCTION LINE
- RL — REFRIGERANT LIQUID LINE
- GATE VALVE
- GLOBE VALVE
- BALL VALVE
- FLOW CONTROL BALANCING VALVE
- HOSE END VALVE
- AUTOMATIC VALVE (TWO WAY)
- RELIEF VALVE OR SAFETY VALVE
- PRESSURE REDUCING VALVE
- CHECK VALVE
- MANUAL AIR VENT
- AUTOMATIC AIR VENT
- UNION
- STRAINER ASSEMBLY
- PRESSURE GAUGE ASSEMBLY
- PRESSURE TEMPERATURE TAP WITH CAP
- THERMOMETER WELL
- PIPE TURNED UP
- PIPE TURNED DOWN
- THERMOMETER
- FLEXIBLE CONNECTION
- T — THERMOSTAT
- T_R — REVERSE ACTING THERMOSTAT
- PUMP
- FAN
- (Q) AxB-C-XX — AIR OUTLET LABEL
  - Q = QUANTITY
  - AxB = NECK SIZE
  - C = TYPE
  - XX = CFM
- DUCT UNDER POSITIVE PRESSURE
- DUCT UNDER NEGATIVE PRESSURE
- AP — ACCESS PANEL
- R — RISE
- D — DROP
- SYMBOL WITH NO MARK IS A MANUAL OBD
  - FD FIRE DAMPER
  - AD AUTOMATIC DAMPER
  - BDD BACK DRAFT DAMPER
  - SBD SELF BALANCING DAMPER
- X/Z — DETAIL REFERENCE (DETAIL "X" ON DRAWING "Z")
- Z/X — SECTION MARK (SECTION "X" ON DRAWING "Z")
- REFERENCE LINE

Washington Village Phase 1

20 Day Street
Building B

Norwalk, CT

Trinity Washington Village Limited Partnership
&
the Norwalk Housing Authority

E-ICON ARCHITECTURE
101 SUMMER ST BOSTON MA 02110
617-451-3333 www.iconarch.com

CONSULTANT
CENTEK engineering
Centered on Solutions SM
www.CentekEng.com
(203) 488-0580
(203) 488-8587 Fax
63-2 North Branford Road, Branford, CT 06405

STAMP



KEYPLAN

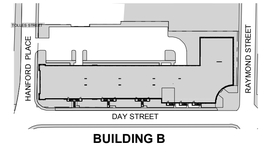

BUILDING B

N

MARK	DATE	DESCRIPTION
	09-15-2014	PERMIT/ PRICING
	06-13-2014	PRICING
	11-18-2013	40% CHFA
	09-19-2013	CAM/ SPECIAL PERMIT

PROJECT NO.: 21222/CENTEK #13232.02
DRAWN BY: KHS
CHECKED BY: FRC

SHEET TITLE

HVAC LEGEND AND SCHEDULES

H-001

J:\Jobs\1323202.ME\HVAC\H-001.dwg Sep 17, 2014 - 10:17pm khs

ENERGY RECOVERY VENTILATOR SCHEDULE

SUMMER OUTDOOR AIR DRY BULB (°F) 95
SUMMER OUTDOOR AIR WET BULB (°F) 75
WINTER OUTDOOR AIR DRY BULB (°F) 10

UNIT NUMBER	LOCATION	OUTDOOR AIR PERFORMANCE						EXHAUST AIR PERFORMANCE						SUPPLY CONDITIONS						VOLTAGE	NOTES SEE BELOW	EMER POWER
		VOLUME (CFM)	EXT SP (IN WG)	TOTAL SP (IN WG)	FRPM	OPERATING POWER (HP)	MOTOR SIZE (HP)	VOLUME (CFM)	EXT SP (IN WG)	TOTAL SP (IN WG)	FRPM	OPERATING POWER (HP)	MOTOR SIZE (HP)	SUMMER			WINTER					
														DRY BULB (°F)	WET BULB (°F)	SPEC HUMID	DRY BULB (°F)	WET BULB (°F)	SPEC HUMID			
ERV-1	ROOF	1275	1.0	2.8	1425	1.4	2	1650	1.7	1.9	–	0.8	2	84	69	81	47	43	35	208V/3PH/60HZ	ALL	NO
ERV-2	ROOF	1275	1.0	2.8	1418	1.4	2	4050	1.7	1.9	–	0.8	2	84	69	81	47	43	35	208V/3PH/60HZ	ALL	NO
ERV-3	ROOF	1700	1.0	2.8	1425	1.4	2	3100	1.7	1.9	–	0.8	2	84	69	81	47	43	35	208V/3PH/60HZ	ALL	NO
ERV-4	ROOF	1700	1.0	2.8	1418	1.4	2	2100	1.7	1.9	–	0.8	2	84	69	81	47	43	35	208V/3PH/60HZ	ALL	NO

NOTES:
1. SELECTION BASED ON AAON RN006 SERIES UNIT.

FAN SCHEDULE

UNIT NUMBER	LOCATION	SERVICE	CFM	S.P. (IN. H_2O)	FAN RPM	WHEEL DIAMETER (IN.)	CLASS	MOTOR DATA @ 60 HZ						INLET VANES	FAN TYPE	SIMILAR TO	NOTES	EMER POWER
								MBHP	MHP	RPM	AMPS	VOLTS	PHASE					
EX-1	GARAGE	TRASH ROOM	500	.25	–	–	–	.07	1/6	–	–	120	1	–	–	GREENHECK SQ-85-VG	1,2	NO
EX-2	MECH. RM.	MECH. RM.	500	.25	–	–	–	.07	1/6	–	–	120	1	–	–	GREENHECK SQ-85-VG	1,2	NO
EX-3	MECH. RM.	TOILET	775	0.5	–	–	–	0.25	1/4	–	–	120	1	–	–	GREENHECK SQ-99-VG	1,2	NO
EX-4	GARAGE	ELEC. ROOM	300	0.5	–	–	–	.08	1/4	–	–	120	1	–	–	GREENHECK SQ-80-VG	1,2	NO
EX-5	ELEC RM.	ELEC RM.	500	0.5	–	–	–	.09	1/4	–	–	120	1	–	–	GREENHECK SQ-140HP-VG	1,2	NO
EX-6	ROOF	DRYER VENT	1200	0.5	–	–	–	–	3	–	–	208	3	–	–	EXHAUSTO BESB	1,2,3,4	NO
EX-7	ROOF	DRYER VENT	6000	0.5	–	–	–	–	3	–	–	208	3	–	–	EXHAUSTO BESB	1,2,3,4	NO
EX-8	ROOF	DRYER VENT	3400	0.5	–	–	–	–	3	–	–	208	3	–	–	EXHAUSTO BESB	1,2,3,4	NO
EX-9	ROOF	DRYER VENT	2200	0.5	–	–	–	–	3	–	–	208	3	–	–	EXHAUSTO BESB	1,2,3,4	NO
EX-10	ROOF	TRASH	400	0.5	–	–	–	.05	1/4	–	–	120	1	–	–	GREENHECK G-080-VG	1,2	NO
EX-11	ROOF	FLUE EXHAUST	–	–	–	–	–	–	1/2	–	–	208	3	–	–	EXHAUSTO RSV 315	1,2,3,4	NO
EX-12	ROOF	EMERG. ELEC. RM	300	0.5	–	–	–	.05	1/6	–	–	120	1	–	–	GREENHECK G-075-VG	1,2	NO
EX-13	LOW ROOF	EL. MACH. RM.	300	0.5	–	–	–	.03	1/6	–	–	120	1	–	–	GREENHECK CW-060-VG	1,2	NO

NOTES:
1. PROVIDE PREMIUM EFFICIENCY MOTOR.
2. FAN SHALL BE ENERGY STAR RATED.
3. PROVIDE WITH MEC 18 CONTROL SYSTEM, PRESSURE TRANSDUCER AND RISER PROBE FOR EACC FAN SYSTEM.
4. PROVIDE COMPLETE CASV315 FAN SYSTEM INCLUDING EBC30 CONTROL PANEL AND XTP STACK PROBE.

AIR DISTRIBUTION DEVICE SCHEDULE

UNIT NO.	SERVICE	AIR PATTERN	NECK SIZE	MATERIAL	ACCESSORIES	SELECTION BASED ON	REMARKS
A	CEILING SUPPLY	1-WAY	SEE PLANS	STEEL OR ALUMINUM	OPPOSED BLADE DAMPER	PRICE SMX	WITH EXTENDED PAN WHERE INSTALLED IN LAY-IN TYPE CEILING
B	CEILING SUPPLY	2-WAY (90°)	SEE PLANS	STEEL OR ALUMINUM	OPPOSED BLADE DAMPER	PRICE SMX	WITH EXTENDED PAN WHERE INSTALLED IN LAY-IN TYPE CEILING
C	CEILING SUPPLY	2-WAY (180°)	SEE PLANS	STEEL OR ALUMINUM	OPPOSED BLADE DAMPER	PRICE SMX	WITH EXTENDED PAN WHERE INSTALLED IN LAY-IN TYPE CEILING
D	CEILING SUPPLY	3-WAY	SEE PLANS	STEEL OR ALUMINUM	OPPOSED BLADE DAMPER	PRICE SMX	WITH EXTENDED PAN WHERE INSTALLED IN LAY-IN TYPE CEILING
E	CEILING SUPPLY	4-WAY	SEE PLANS	STEEL OR ALUMINUM	OPPOSED BLADE DAMPER	PRICE SMX	WITH EXTENDED PAN WHERE INSTALLED IN LAY-IN TYPE CEILING
F	RETURN/ EXHAUST	–	SEE PLANS	STEEL OR ALUMINUM	OPPOSED BLADE DAMPER	PRICE 530D	WITH EXTENDED PAN WHERE INSTALLED IN LAY-IN TYPE CEILING
G	SIDEWALL SUPPLY	DOUBLE DEFLECTION	SEE PLANS	STEEL OR ALUMINUM	OPPOSED BLADE DAMPER	PRICE 520D	

BOILER SCHEDULE

UNIT NO.	SERVICE	LOCATION	GPM	MBH INPUT	MBH OUTPUT	MIN GAS PRES. REQ.	MAX GAS PRES. REQ.	FUEL INPUT		EWT/LWT	ELECTRICAL DATA			SELECTION BASED ON	NOTES	EMERGENCY POWER
								TYPE	HP		V	Ø	HZ			
B-1	HOT WATER	MECH RM	100	1000	–	2" WC	14" WC	NG	30	170/190	120	1	60	CAMUS DRNH 1000		
B-2	HOT WATER	MECH RM	100	1000	–	2" WC	14" WC	NG	30	170/190	120	1	60	CAMUS DRNH 1000		

AIR SEPARATOR SCHEDULE

UNIT NUMBER	LOCATION	SYSTEM	FLOW (GPM)	SIZE (IN)	ΔPRESS FT. H_2O	STRAINER	REMARKS
AS-1	SEE PLANS	CONDENSOR WATER	750	6"	–	YES	TACO

WATER PUMP SCHEDULE

UNIT NUMBER	LOCATION	SERVICE	TYPE	GPM	TOTAL HEAD (FT. H_2O)	MAX NPSH	MOTOR DATA @ 60 HZ					SIMILAR TO	NOTES SEE BELOW	EMER POWER
							BHP	MHP	RPM	VOLTS	PHASE			
HWP-1	MECH RM	HOT WATER	END SUCTION	750	100	–	24	30	1750	208	3	BELL AND GOSSETT		–
HWP-2	MECH RM	HOT WATER	END SUCTION	750	100	–	24	30	1750	208	3	BELL AND GOSSETT	1	–
HWP-3	MECH RM	BOILER	IN-LINE	160	2	–	–	–	–	120	1	BELL AND GOSSETT	2,3	–
HWP-4	MECH RM	BOILER	IN-LINE	160	2	–	–	–	–	120	1	BELL AND GOSSETT	2,3	–

NOTES:
1. (STANDBY)
2. PRIMARY PUMP PROVIDED BY BOILER MANUFACTURER AND INSTALLED BY HVAC CONTRACTOR. REFER TO BOILER PIPING DIAGRAM FOR ADDITIONAL INFORMATION.
3. INSTALL PER BOILER MANUFACTURER'S RECOMMENDATIONS.

WATER SOURCE HEAT PUMP SCHEDULE

① 85° EWT, 96° LWT ② 70° EWT, 65° LWT

UNIT NO.	MODEL NO.	NOM. CFM	PRIMARY VENTILATION AIR	E.S.P.	GPM	P.D. <FT H_2O>	COOLING CAPACITY ①			HEATING CAPACITY ②		ELECTRIC DATA @ 60 HZ					UNIT TYPE	MIN. RUNOUT SIZES		NOTES
							TOTAL	SENSIBLE	KW	OUTPUT MBH	ABSORPTION MBH	FAN FLA	COMP. RLA	V	PH	MCA		WATER	DRAIN	
WSHP-1	TRANE GETE0091	300	–	.05	1.5	–	8.6	7	0.64	11.5	9.1	0.6	3.7	208	1	3	VERTICAL STACK	1"	1"	1,3,4,6,7
WSHP-2	TRANE GETE0121	300	–	.05	2.0	–	11.3	8.5	0.86	13.6	10.4	0.7	6.3	208	1	8.6	VERTICAL STACK	1"	1"	1,3,4,6,7
WSHP-3	TRANE GETE0181	650	–	.05	3.0	–	17.8	14.5	1.4	22.9	18	0.7	9.6	208	1	12.7	VERTICAL STACK	1"	1"	1,3,4,6,7
WSHP-4	TRANE GETE241	800	100			–	24	–	–	–	–	–	–	208	1	–	VERTICAL STACK	1"	1"	1,3,4,6,7
WSHP-5	TRANE GEHE0091	300	40				9							208	1		HORIZONTAL	1"	1"	1,4,5,6,7
WSHP-6	TRANE GEHE0121	400	50				12							208	1		HORIZONTAL	1"	1"	1,4,5,6,7
WSHP-7	TRANE GEHE0181	600	75				18							208	1		HORIZONTAL	1"	1"	1,4,5,6,7
WSHP-8	TRANE GEHE0241	800	100				24							208	1		HORIZONTAL	1"	1"	1,4,5,6,7
WSHP-9	TRANE GEHE0361	1200	150				36							208	1		HORIZONTAL	1"	1"	1,4,5,6,7
WSHP-10	TRANE GEHE0481	1600	200				48							208	1		HORIZONTAL	1"	1"	1,4,5,6,7
WSHP-11	TRANE	1000	1000				48							208	1		HORIZONTAL	1"	1"	1,4,5,6,7
WSHP-12	TRANE GEC012	425	–	.05	2.2	–	–	–	–	16.6	13.6			208	1		VERTICAL CABINET	1"	1"	

NOTES:
1. UNIT SELECTIONS BASED ON TRANE GETE SERIES HIGH EFFICIENCY VERTICAL STACK UNITS.
2. PROVIDE DOUBLE DEFLECTION SUPPLY GRILLES WITH OPPOSED BLADE DAMPERS FOR EACH DISCHARGE OPENING ON UNIT. REFER TO FLOOR PLANS FOR AIR BALANCING INFORMATION. GRILLES AND DAMPERS SHALL BE SIZED PER MANUFACTURER'S INSTALLATION INSTRUCTIONS.
3. PROVIDE ACOUSTICALLY INSULATED FRONT PANEL.
4. COORDINATE EXACT DIMENSIONS AND LOCATIONS OF ALL WATER SOURCE HEAT PUMPS WITH ARCHITECT PRIOR TO INSTALLATION TO ENSURE ADEQUATE SPACE IS AVAILABLE FOR INSTALLATION AND ALL RECOMMENDED SERVICE CLEARANCES ARE PROVIDED.
5. UNIT SELECTIONS BASED ON TRANE GEHE SERIES HIGH EFFICIENCY HORIZONTAL HEAT PUMPS.
6. PROVIDE WITH UNIT MOUNTED DISCONNECT SWITCH.
7. PROVIDE WITH AUXILLARY DRAIN PAN WITH CONDENSATE OVERFLOW SWITCH AND TIE INTO UNIT CONTROL SYSTEM TO SHUT DOWN RESPECTIVE UNIT UPON LIQUID DETECTION.

J:\Jobs\1323202.ME\HVAC\H-002.dwg Sep 17, 2014 - 10:17pm khs

Washington Village Phase 1

20 Day Street
Building B

Norwalk, CT

Trinity Washington Village Limited Partnership
&
the Norwalk Housing Authority

E-ICON ARCHITECTURE
101 SUMMER ST BOSTON MA 02110
617-451-3333 www.iconarch.com

CONSULTANT
CENTEK engineering
Centered on Solutions ℠
www.CentekEng.com
(203) 488-0580
(203) 488-8587 Fax
63-2 North Branford Road, Branford, CT 06405

STAMP



KEYPLAN

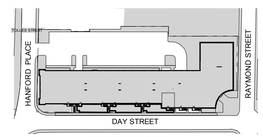

BUILDING B

N

MARK	DATE	DESCRIPTION
	09-15-2014	PERMIT/ PRICING
	06-13-2014	PRICING
	11-18-2013	40% CHFA
	09-19-2013	CAM/ SPECIAL PERMIT

PROJECT NO.: 21222/CENTEK #13232.02
DRAWN BY: KHS
CHECKED BY: FRC

SHEET TITLE

HVAC SCHEDULES

H-002

HVAC WORK NOTES

1. 12x12 EXHAUST RISER UP.
2. 1-1/2" CONDENSER WATER UP. FOR CONTINUATION REFERTO DRAWING H-104.
3. 1-1/4" CONDENSATE DRAIN RISER UP.
4. FOR CONTINUATION REFER TO PLUMBING DRAWINGS.

GENERAL NOTE:

1. COORDINATE ALL WORK WITH ALL OTHER TRADES. REFER TO OTHER TRADE'S DRAWINGS FOR ADDITIONAL INFORMATION.

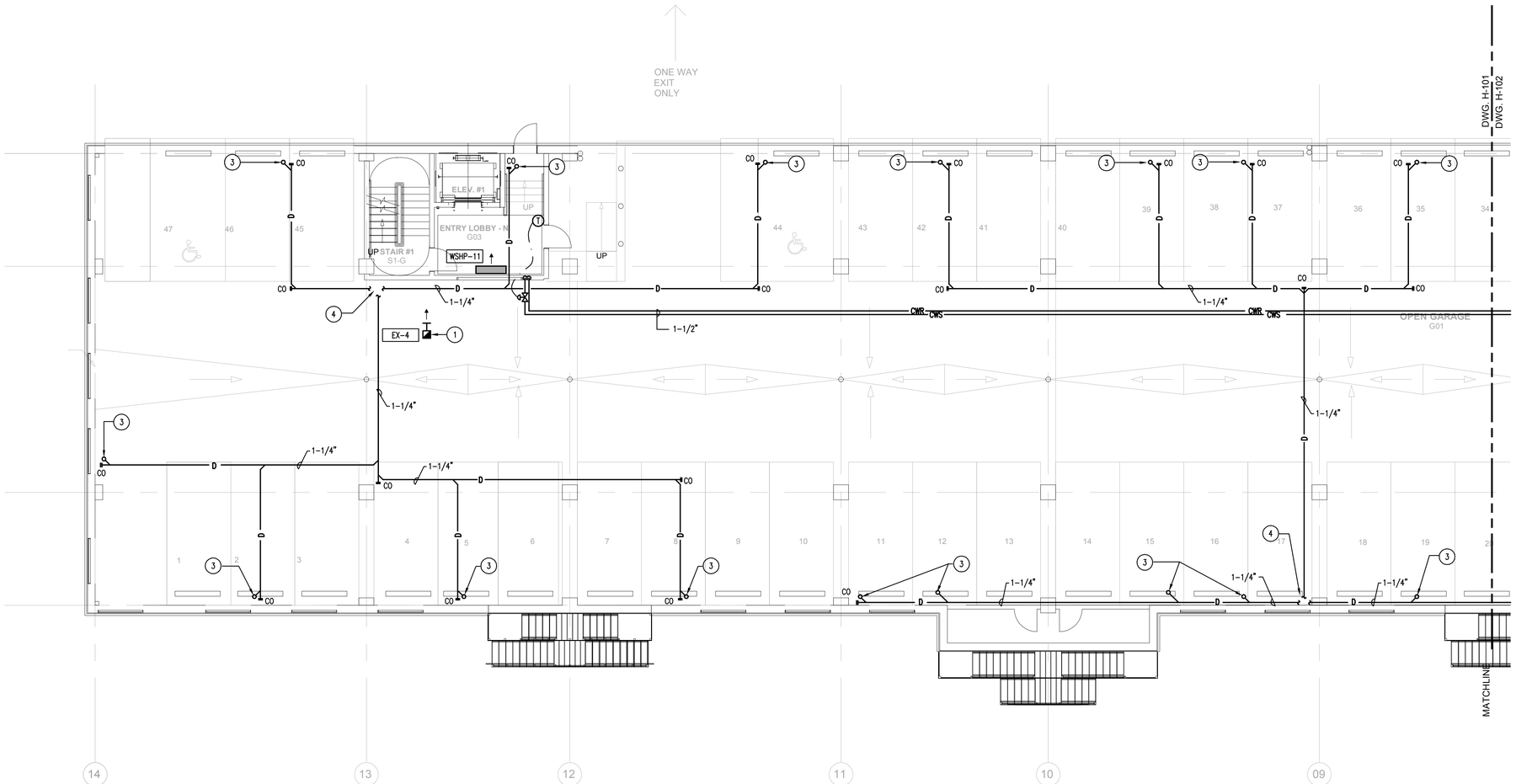

1 GROUND LEVEL PLAN (NORTH WING) - HVAC
SCALE: 1/8"=1'-0"

PROJECT NORTH

J:\Jobs\1323202.ME\HVAC\H-101 & H-102.dwg Sep 17, 2014 - 10:18pm khs

Washington Village Phase 1

20 Day Street Building B

Norwalk, CT

Trinity Washington Village Limited Partnership
&
the Norwalk Housing Authority

E-ICON ARCHITECTURE
101 SUMMER ST BOSTON MA 02110
617-451-3333 www.iconarch.com

CONSULTANT
CENTEK engineering
Centered on Solutions ℠
www.CentekEng.com
(203) 488-0580
(203) 488-8587 Fax
63-2 North Branford Road, Branford, CT 06405

STAMP



KEYPLAN

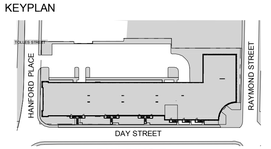

BUILDING B

N 0 4' 8' 16'

MARK	DATE	DESCRIPTION
	09-15-2014	PERMIT/ PRICING
	06-13-2014	PRICING
	11-18-2013	40% CHFA
	09-19-2013	CAM/ SPECIAL PERMIT

PROJECT NO.: 21222/CENTEK #13232.02
DRAWN BY: KHS
CHECKED BY: FRC

SHEET TITLE

BUILDING B
GROUND LEVEL
PLAN (NORTH
WING) - HVAC

H-101

HVAC WORK NOTES

1. 12x12 EXHAUST RISER UP.
2. 1-1/2" CONDENSER WATER UP. FOR CONTINUATION REFER TO DWG. H-104.
3. 1-1/4" CONDENSATE DRAIN RISER UP.
4. FOR CONTINUATION REFER TO PLUMBING DRAWINGS.

GENERAL NOTE:

1. COORDINATE ALL WORK WITH ALL OTHER TRADES. REFER TO OTHER TRADE'S DRAWINGS FOR ADDITIONAL INFORMATION.

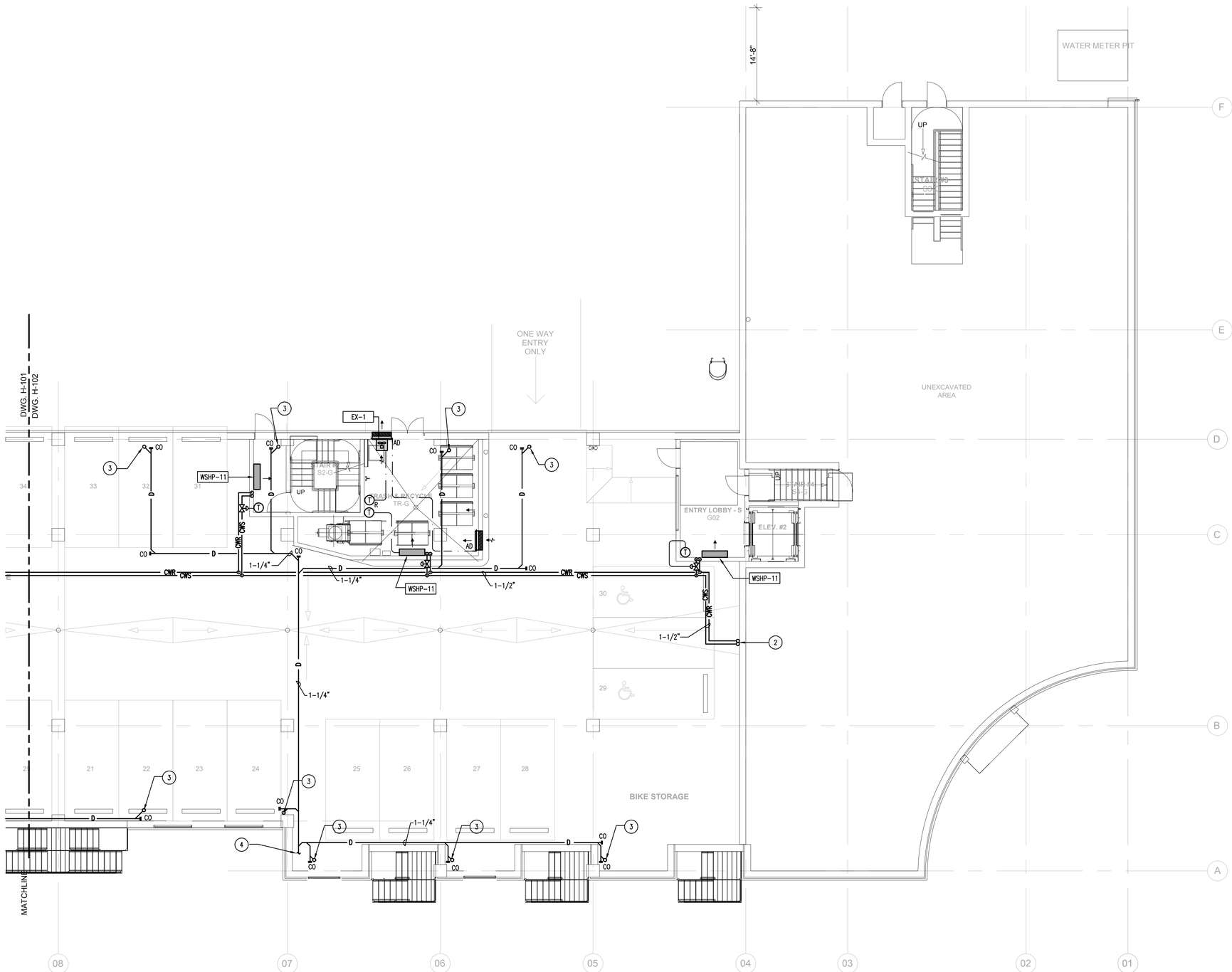

1 GROUND LEVEL PLAN (SOUTH WING) - HVAC
SCALE: 1/8"=1'-0"

PROJECT NORTH

Washington Village Phase 1

20 Day Street Building B

Norwalk, CT

Trinity Washington Village Limited Partnership
&
the Norwalk Housing Authority

E-ICON ARCHITECTURE
101 SUMMER ST BOSTON MA 02110
617-451-3333 www.iconarch.com

CONSULTANT
CENTEK engineering
Centered on Solutions ℠
www.CentekEng.com
(203) 488-0580
(203) 488-8587 Fax
63-2 North Branford Road, Branford, CT 06405

STAMP



KEYPLAN

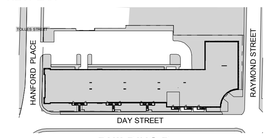

BUILDING B

N 0 4' 8' 16'

MARK	DATE	DESCRIPTION
	09-15-2014	PERMIT/ PRICING
	06-13-2014	PRICING
	11-18-2013	40% CHFA
	09-19-2013	CAM/ SPECIAL PERMIT

PROJECT NO.: 21222/CENTEK #13232.02
DRAWN BY: KHS
CHECKED BY: FRC

SHEET TITLE

BUILDING B GROUND LEVEL PLAN (SOUTH WING) - HVAC

H-102

J:\Jobs\1323202.MEH\HVAC\H-101 & H-102.dwg Sep 17, 2014 - 10:18pm khs

HVAC WORK NOTES

1. 12x12 ELECTRIC ROOM EXHAUST RISER.
2. 16x16 MAKE UP AIR RISER.

GENERAL NOTE:

1. COORDINATE ALL WORK WITH ALL OTHER TRADES. REFER TO OTHER TRADE'S DRAWINGS FOR ADDITIONAL INFORMATION.

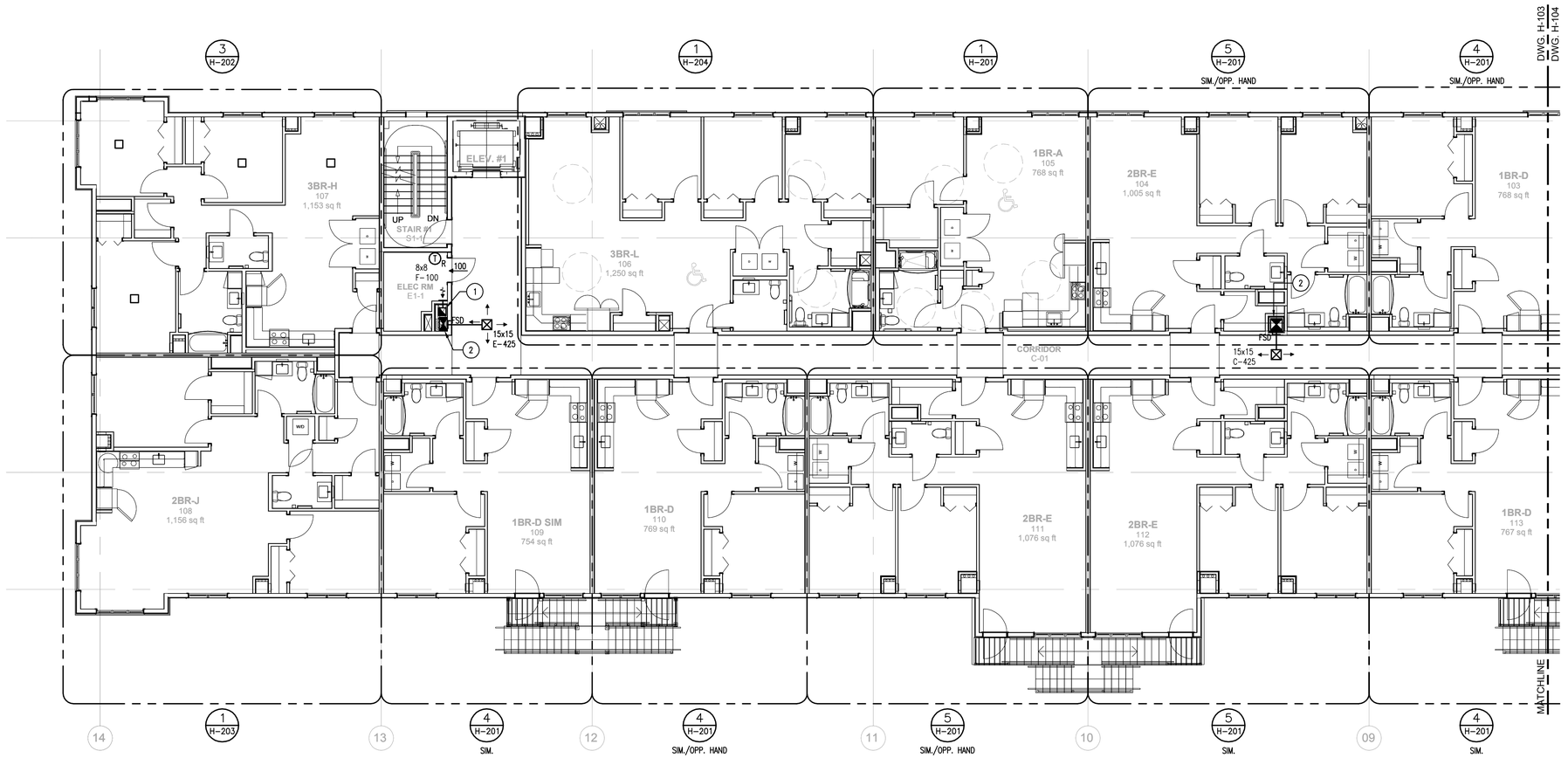

1 **FIRST FLOOR PLAN (NORTH WING) - HVAC**
SCALE: 1/8"=1'-0"

PROJECT NORTH

J:\Jobs\1323202.ME\HVAC\H-103 & H-104.dwg Sep 17, 2014 - 10:18pm khs

Washington Village Phase 1

20 Day Street Building B

Norwalk, CT

Trinity Washington Village Limited Partnership
&
the Norwalk Housing Authority

E-ICON ARCHITECTURE
101 SUMMER ST BOSTON MA 02110
617-451-3333 www.iconarch.com

CONSULTANT
CENTEK engineering
Centered on Solutions ℠
www.CentekEng.com
(203) 488-0580
(203) 488-8587 Fax
63-2 North Branford Road, Branford, CT 06405

STAMP



KEYPLAN

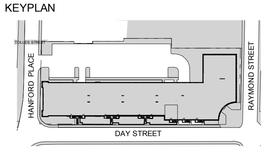

BUILDING B

N 0 8' 8' 16'

MARK	DATE	DESCRIPTION
	09-19-2013	CAM/ SPECIAL PERMIT
	11-18-2013	40% CHFA
	06-13-2014	PRICING
	09-15-2014	PERMIT/ PRICING

PROJECT NO.: 21222/CENTEK #13232.02
DRAWN BY: KHS
CHECKED BY: FRC

SHEET TITLE

BUILDING B
FIRST FLOOR
PLAN (NORTH
WING) - HVAC

H-103

DIFFUSER, REGISTER AND BRANCH DUCT SIZING CHART

1. SUPPLY DUCTS AND DIFFUSERS

FOR SHEET METAL ESTIMATING PURPOSES, UNLESS NOTED OTHERWISE, ALL LOW PRESSURE SUPPLY DUCTWORK AND DIFFUSERS SHALL BE SIZED IN ACCORDANCE WITH THE FOLLOWING TABLE:

LISTED CFM	DIFFUSER SIZE	BRANCH DUCT SIZE
0–250	9x9	12x6
251–450	12x12	14x8
451–750	15x15	*18x8 – 18x10
751–1000	18x18	*20x10 – 22x10
1001–1350	21x21	*24x10 – 30x10

* LARGER DUCT SIZE IS FOR HIGHER END OF CFM LISTED. ALL DUCTS ARE SIZED FOR 700 FPM.

2. RETURN/EXHAUST DUCTS AND REGISTERS

FOR SHEET METAL ESTIMATING PURPOSES, UNLESS NOTED OTHERWISE, ALL LOW PRESSURE EXHAUST DUCTWORK AND REGISTERS SHALL BE SIZED IN ACCORDANCE WITH THE FOLLOWING TABLE:

LISTED CFM	REGISTER SIZE	BRANCH DUCT SIZE
0–200	8x8	12x6
201–300	10x10	12x8
301–450	12x12	14x8
451–600	14x14	16x8
601–800	16x16	*20x8 – 20x10
801–1000	18x18	*20x10 – 22x10
1001–1500	22x22	*30x10 – 28x12

* LARGER DUCT SIZE IS FOR HIGHER END OF CFM LISTED. ALL DUCTS ARE SIZED FOR 700 FPM.

HVAC WORK NOTES

1. 16x16 MAKEUP AIR RISER UP.
2. TRASH ROOM EXHAUST RISER.
3. HWS & HWR DOWN TO PARKING GARAGE SERVING UNIT HEATERS.
4. 14"ø FLUE EXHAUST STACK.
5. 1-1/4" CONDENSATE DRAIN RISER UP.
6. TERMINATE 1-1/2" CONDENSATE DRAIN PIPING DOWN TO JAN. MOP SINK WITH REQ'D AIR GAP.
7. (2) 6" CWS AND (1) 6" CWR UP.
8. 1-1/4" CONDENSATE DRAIN PIPING UP.

GENERAL NOTE:

1. COORDINATE ALL WORK WITH ALL OTHER TRADES. REFER TO OTHER TRADE'S DRAWINGS FOR ADDITIONAL INFORMATION.

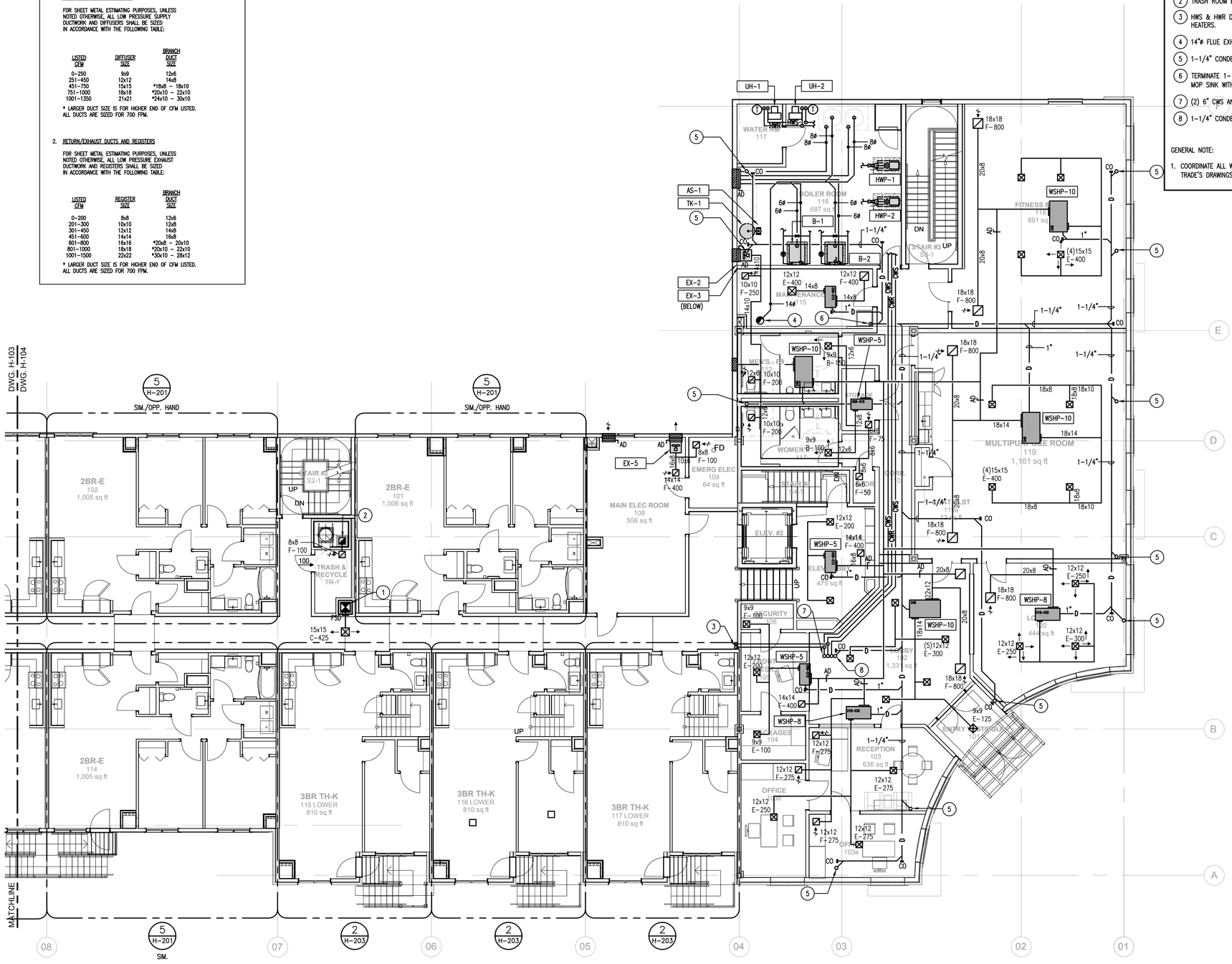

1 FIRST FLOOR PLAN (SOUTH WING) - HVAC
SCALE: 1/8"=1'-0"

PROJECT NORTH

Washington Village Phase 1

20 Day Street Building B

Norwalk, CT

Trinity Washington Village Limited Partnership
&
the Norwalk Housing Authority

E-ICON ARCHITECTURE
101 SUMMER ST BOSTON MA 02110
617-451-3333 www.iconarch.com

CONSULTANT
CENTEK engineering
Centered on Solutions ℠
www.CentekEng.com
(203) 488-0580
(203) 488-8587 Fax
63-2 North Branford Road, Branford, CT 06405

STAMP

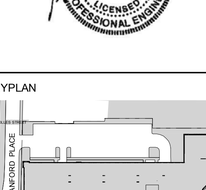

KEYPLAN

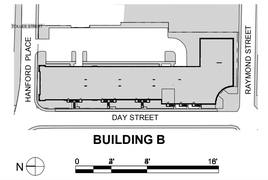

MARK	DATE	DESCRIPTION
	09-15-2014	PERMIT/ PRICING
	06-13-2014	PRICING
	11-18-2013	40% CHFA
	09-19-2013	CAM/ SPECIAL PERMIT

PROJECT NO.: 21222/CENTEK #13232.02
DRAWN BY: KHS
CHECKED BY: FRC

SHEET TITLE

BUILDING B FIRST FLOOR PLAN (SOUTH WING) - HVAC

H-104

J:\Jobs\13232021\MEP\HVAC\H-103 & H-104.dwg Sep 17, 2014 - 10:19pm khs

HVAC WORK NOTES

1. ELECTRIC ROOM EXHAUST RISER.
2. 16x16 MAKE UP AIR RISER.
3. 20x12 MAKE UP AIR RISER.

GENERAL NOTE:

1. COORDINATE ALL WORK WITH ALL OTHER TRADES. REFER TO OTHER TRADE'S DRAWINGS FOR ADDITIONAL INFORMATION.

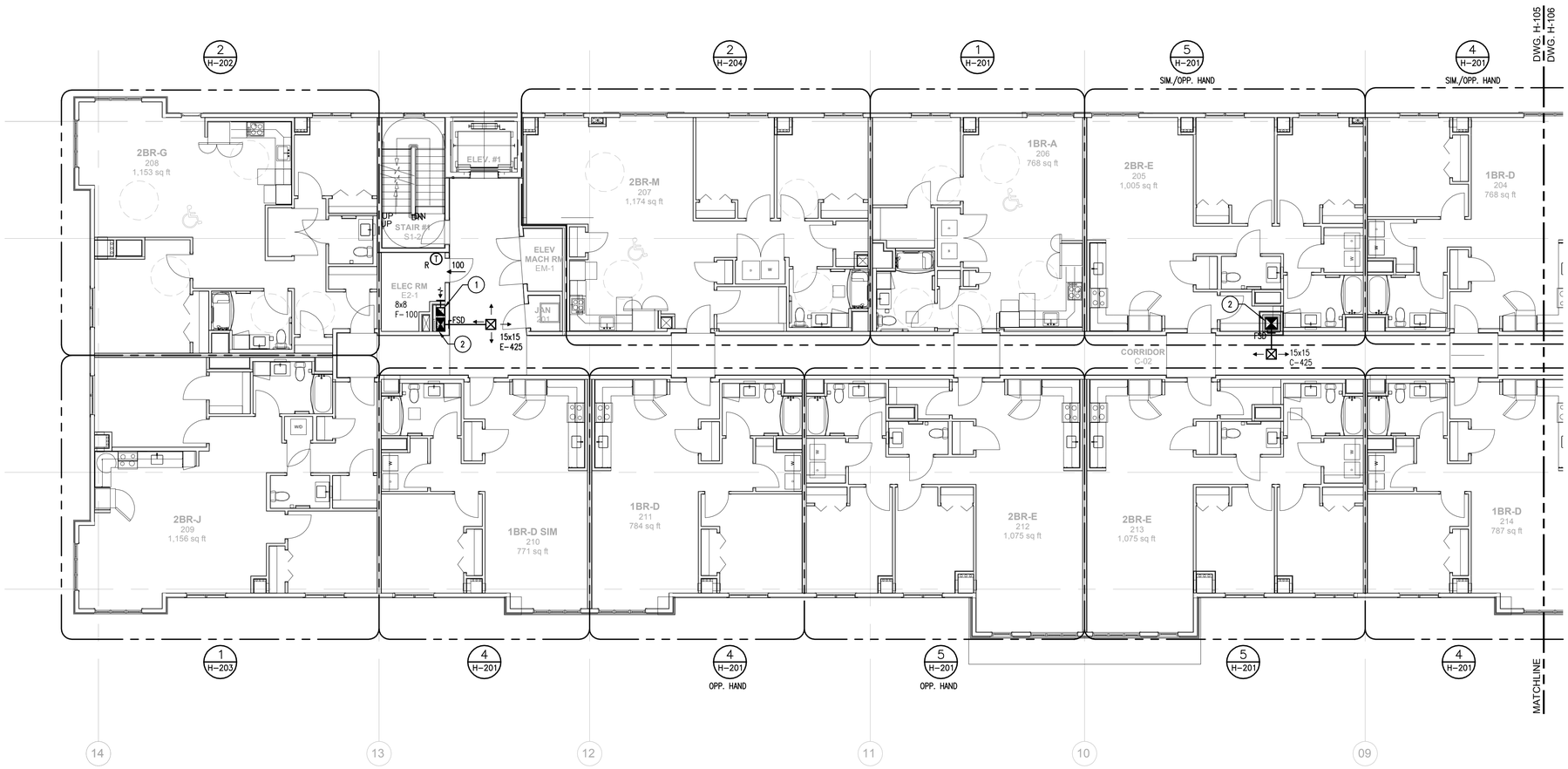

1 **SECOND FLOOR PLAN (NORTH WING) - HVAC**
SCALE: 1/8"=1'-0"

PROJECT NORTH

Washington Village Phase 1

20 Day Street Building B

Norwalk, CT

Trinity Washington Village Limited Partnership
&
the Norwalk Housing Authority

E-ICON ARCHITECTURE
101 SUMMER ST BOSTON MA 02110
617-451-3333 www.iconarch.com

CONSULTANT
CENTEK engineering
Centered on Solutions ℠
www.CentekEng.com
(203) 488-0580
(203) 488-8587 Fax
63-2 North Branford Road, Branford, CT 06405

STAMP



KEYPLAN

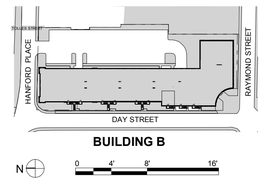

BUILDING B

N 0 4' 8' 16'

MARK	DATE	DESCRIPTION
	09-15-2014	PERMIT/ PRICING
	06-13-2014	PRICING
	11-18-2013	40% CHFA
	09-19-2013	CAM/ SPECIAL PERMIT

PROJECT NO.: 21222/CENTEK #13232.02
DRAWN BY: KHS
CHECKED BY: FRC

SHEET TITLE

BUILDING B SECOND FLOOR PLAN (NORTH WING) - HVAC

H-105

J:\Jobs\1323202.PE\HVAC\H-105 & H-106.dwg Sep 17, 2014 - 10:19pm khs

HVAC WORK NOTES

1. TRASH ROOM EXHAUST RISER.
2. 16x16 MAKE UP AIR RISER.
3. 14ø FLUE STACK.
4. 1-1/4" CONDENSATE DRAIN PIPING UP & DOWN.
5. (2) 6" CWS & (1) 6" CWR UP & DN.

GENERAL NOTE:

1. COORDINATE ALL WORK WITH ALL OTHER TRADES. REFER TO OTHER TRADE'S DRAWINGS FOR ADDITIONAL INFORMATION.

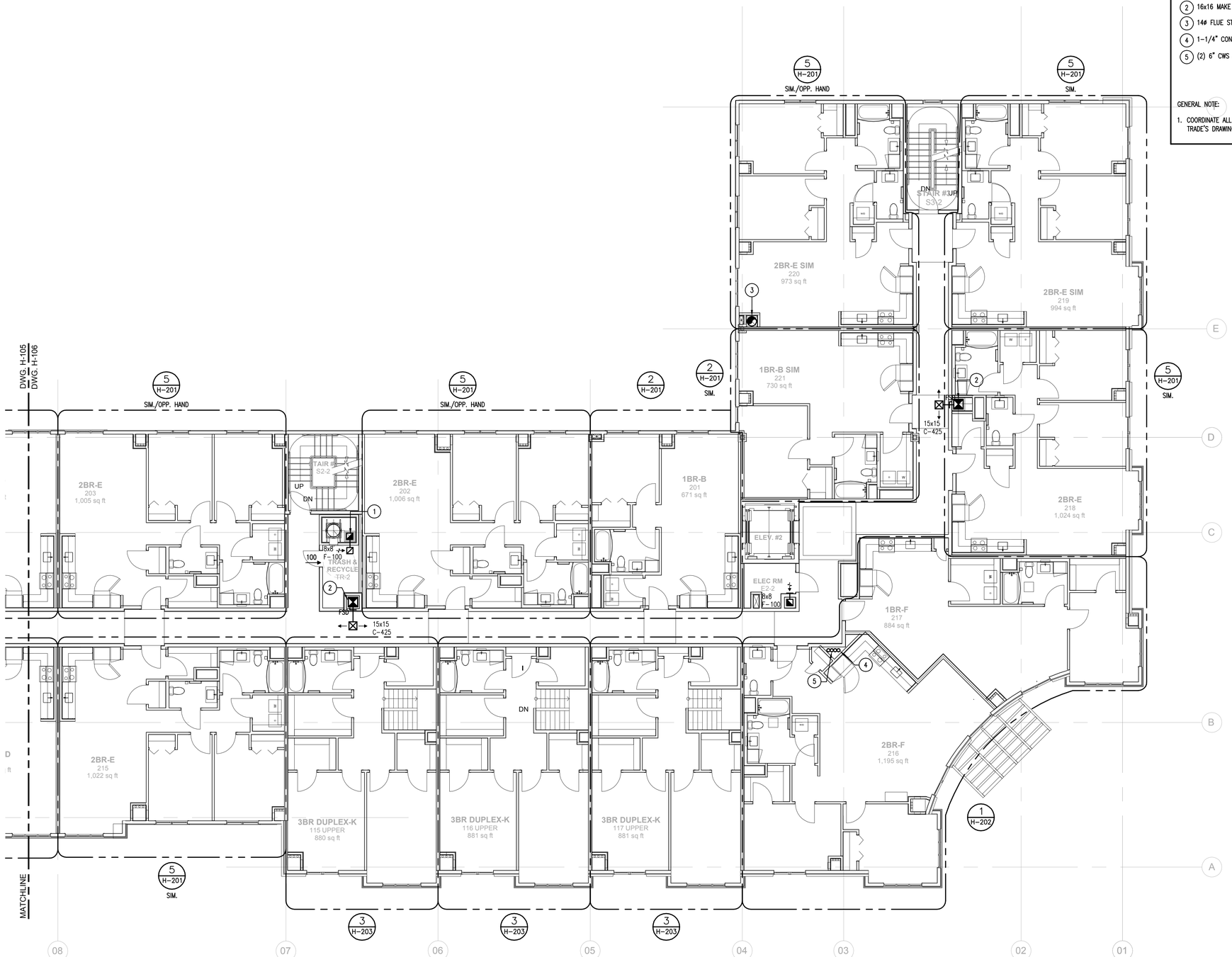

1 SECOND FLOOR PLAN (SOUTH WING) - HVAC
SCALE: 1/8"=1'-0"

PROJECT NORTH

J:\Jobs\1323202.ME\HVAC\H-105 & H-106.dwg Sep 17, 2014 - 10:19pm khs

Washington Village Phase 1

20 Day Street Building B

Norwalk, CT

Trinity Washington Village Limited Partnership
&
the Norwalk Housing Authority

E-ICON ARCHITECTURE
101 SUMMER ST BOSTON MA 02110
617-451-3333 www.iconarch.com

CONSULTANT
CENTEK engineering
Centered on Solutions ℠
www.CentekEng.com
(203) 488-0580
(203) 488-8587 Fax
63-2 North Branford Road, Branford, CT 06405

STAMP



KEYPLAN

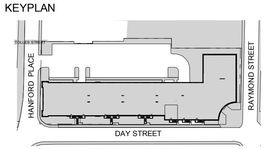

BUILDING B

N 0 4' 8' 16'

MARK	DATE	DESCRIPTION
	09-19-2013	CAM/ SPECIAL PERMIT
	11-18-2013	40% CHFA
	06-13-2014	PRICING
	09-15-2014	PERMIT/ PRICING

PROJECT NO.: 21222/CENTEK #13232.02
DRAWN BY: KHS
CHECKED BY: FRC

SHEET TITLE

BUILDING B SECOND FLOOR PLAN (SOUTH WING) - HVAC

H-106

HVAC WORK NOTES

1. DRYER EXHAUST RISER.
2. GENERAL EXHAUST UP TO ERV-1.
3. GENERAL EXHAUST UP TO ERV-2.
4.
5.
6. 12x12 ELECTRIC ROOM EXHAUST RISER.
7. 16x16 MAKE UP AIR RISER.
8. 20x12 MAKE UP AIR RISER.

GENERAL NOTE:

1. COORDINATE ALL WORK WITH ALL OTHER TRADES. REFER TO OTHER TRADE'S DRAWINGS FOR ADDITIONAL INFORMATION.

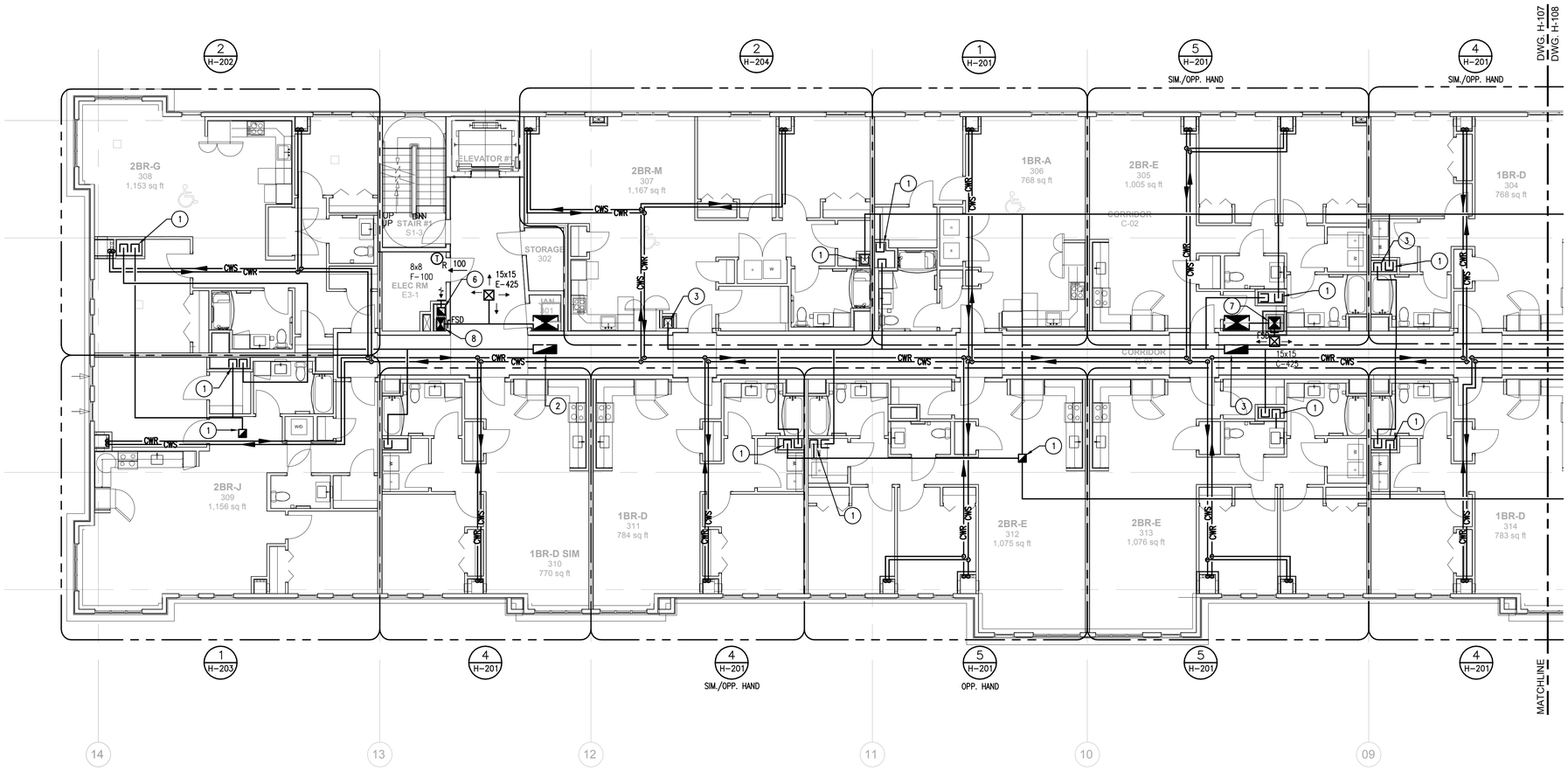

1 THIRD FLOOR PLAN (NORTH WING) - HVAC
SCALE: 1/8"=1'-0"

Washington Village Phase 1

20 Day Street Building B

Norwalk, CT

Trinity Washington Village Limited Partnership
&
the Norwalk Housing Authority

E-ICON ARCHITECTURE
101 SUMMER ST BOSTON MA 02110
617-451-3333 www.iconarch.com

CONSULTANT
CENTEK engineering
Centered on Solutions ℠
www.CentekEng.com
(203) 488-0580
(203) 488-8587 Fax
63-2 North Branford Road, Branford, CT 06405

STAMP



KEYPLAN

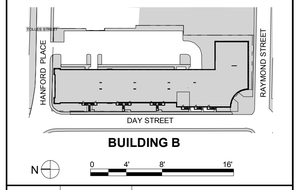

MARK	DATE	DESCRIPTION
	09-15-2014	PERMIT/ PRICING
	06-13-2014	PRICING
	11-18-2013	40% CHFA
	09-19-2013	CAM/ SPECIAL PERMIT

PROJECT NO.:	21222/CENTEK #13232.02
DRAWN BY:	KHS
CHECKED BY:	FRC

SHEET TITLE

BUILDING B
THIRD FLOOR
PLAN (NORTH
WING) - HVAC

PROJECT NORTH

H-107

J:\Jobs\13232022.MEP\HVAC\H-107 & H-108.dwg Sep 17, 2014 - 10:20pm khs

HVAC WORK NOTES

1. TRASH ROOM EXHAUST RISER.
2. 1-1/4" CONDENSATE DRAIN PIPING UP & DOWN.
3. (2) 6" CWS AND (1) CWR DOWN.
4. EXHAUST RISER.
5. EXHAUST RISER.
6. 16x16 MAKE UP AIR RISER.
7. 14"ø FLUE STACK.

GENERAL NOTE:

1. COORDINATE ALL WORK WITH ALL OTHER TRADES. REFER TO OTHER TRADE'S DRAWINGS FOR ADDITIONAL INFORMATION.

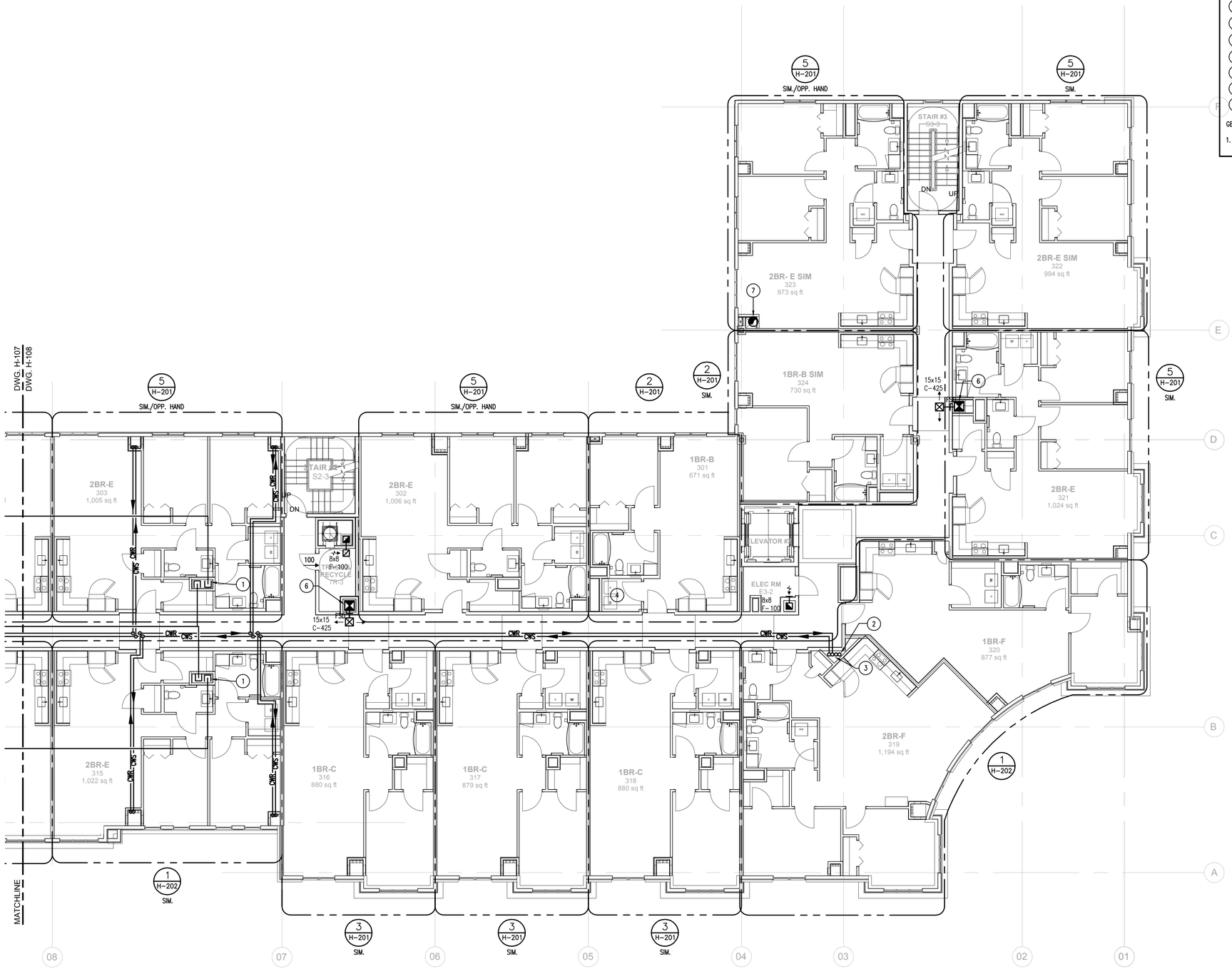

1 THIRD FLOOR PLAN (SOUTH WING) - HVAC
SCALE: 1/8"=1'-0"

PROJECT NORTH

Washington Village Phase 1

20 Day Street Building B

Norwalk, CT

Trinity Washington Village Limited Partnership
&
the Norwalk Housing Authority

E-ICON ARCHITECTURE
101 SUMMER ST BOSTON MA 02110
617-451-3333 www.iconarch.com

CONSULTANT
CENTEK engineering
Centered on Solutions ℠
www.CentekEng.com
(203) 488-0580
(203) 488-8587 Fax
63-2 North Branford Road, Branford, CT 06405

STAMP



KEYPLAN

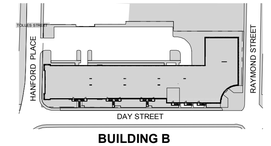

MARK	DATE	DESCRIPTION
	09-15-2014	PERMIT/ PRICING
	06-13-2014	PRICING
	11-18-2013	40% CHFA
	09-19-2013	CAM/ SPECIAL PERMIT

PROJECT NO.: 21222/CENTEK #13232.02
DRAWN BY: KHS
CHECKED BY: FRC

SHEET TITLE

BUILDING B THIRD FLOOR PLAN (SOUTH WING) - HVAC

H-108

J:\Jobs\13232.02 ME\HVAC\H-107 & H-108.dwg Sep 17, 2014 - 10:20pm khs

DIFFUSER, REGISTER AND BRANCH DUCT SIZING CHART

1. SUPPLY DUCTS AND DIFFUSERS

FOR SHEET METAL ESTIMATING PURPOSES, UNLESS NOTED OTHERWISE, ALL LOW PRESSURE SUPPLY DUCTWORK AND DIFFUSERS SHALL BE SIZED IN ACCORDANCE WITH THE FOLLOWING TABLE:

LISTED CFM	DIFFUSER SIZE	BRANCH DUCT SIZE
0–250	9x9	12x6
251–450	12x12	14x8
451–750	15x15	*18x8 – 18x10
751–1000	18x18	*20x10 – 22x10
1001–1350	21x21	*24x10 – 30x10

* LARGER DUCT SIZE IS FOR HIGHER END OF CFM LISTED. ALL DUCTS ARE SIZED FOR 700 FPM.

2. RETURN/EXHAUST DUCTS AND REGISTERS

FOR SHEET METAL ESTIMATING PURPOSES, UNLESS NOTED OTHERWISE, ALL LOW PRESSURE EXHAUST DUCTWORK AND REGISTERS SHALL BE SIZED IN ACCORDANCE WITH THE FOLLOWING TABLE:

LISTED CFM	REGISTER SIZE	BRANCH DUCT SIZE
0–200	8x8	12x6
201–300	10x10	12x8
301–450	12x12	14x8
451–600	14x14	16x8
601–800	16x16	*20x8 – 20x10
801–1000	18x18	*20x10 – 22x10
1001–1500	22x22	*30x10 – 28x12

* LARGER DUCT SIZE IS FOR HIGHER END OF CFM LISTED. ALL DUCTS ARE SIZED FOR 700 FPM.

HVAC WORK NOTES

1. DRYER EXHAUST RISER.
2. 1–1/4" CONDENSATE DRAIN PIPING DOWN.
3. GENERAL EXHAUST RISER UP TO ERV–3.
4. GENERAL EXHAUST RISER UP TO ERV–4.
5. (2) 6" CWS & (1) 6" CWR DOWN.
6. TRASH ROOM EXHAUST RISER.
7. COOLING TOWER SHALL BE PROVIDED WITH ALL REQUIRED STEEL DUNNAGE, VIBRATION ISOLATION SUPPORTS AND SINGLE POINT POWER CONNECTION AND CONTROL PANEL INCLUDING VARIABLE SPEED DRIVES FOR FAN MOTORS.
8. 16x16 MAKE–UP AIR RISER & CORRIDOR SUPPLY DIFFUSER. TYPICAL FOR ALL FLOORS, REFER TO RISER DIAGRAM.
9. 14"ø FLUE STACK.

GENERAL NOTE:

1. COORDINATE ALL WORK WITH ALL OTHER TRADES. REFER TO OTHER TRADE'S DRAWINGS FOR ADDITIONAL INFORMATION.

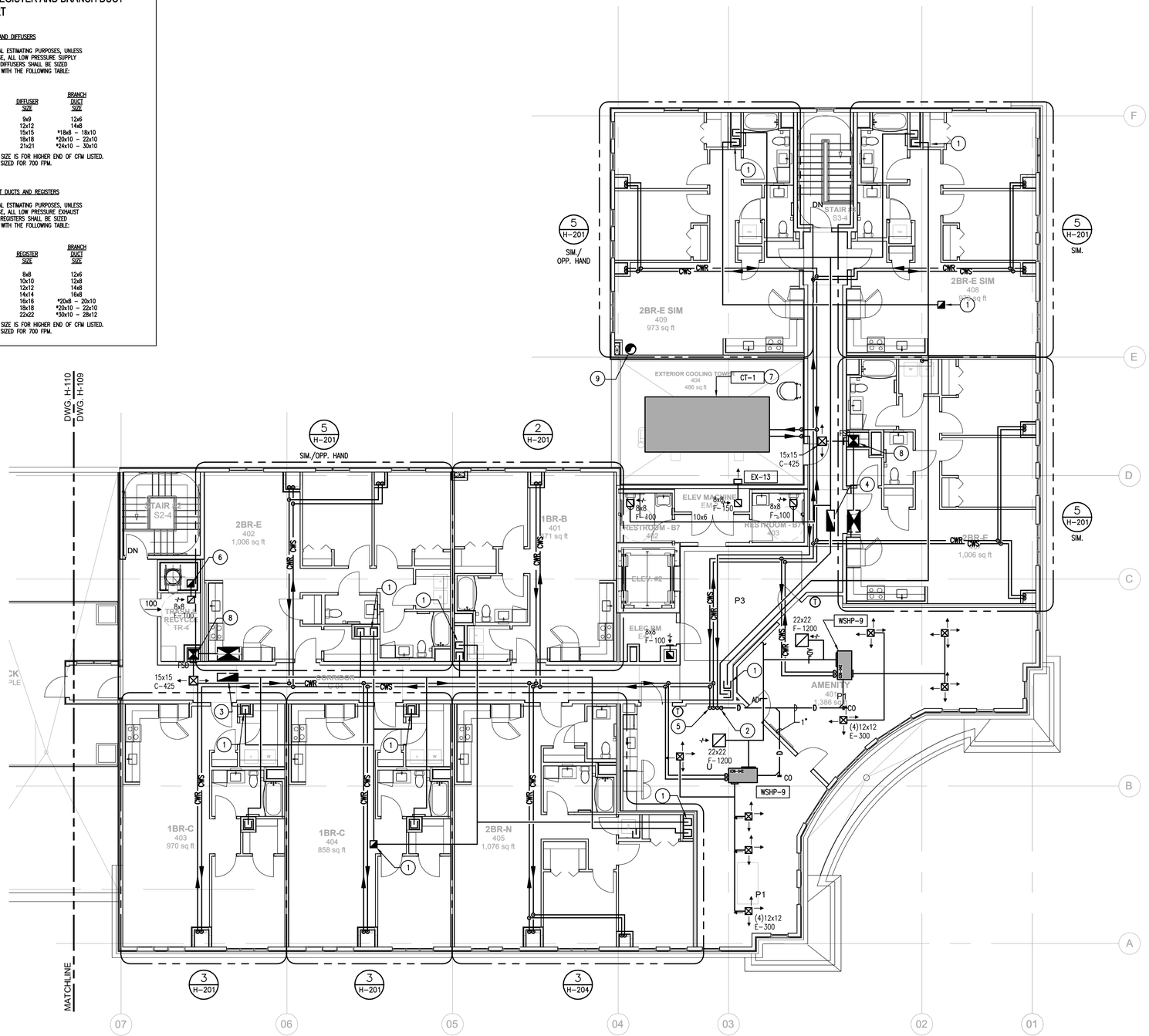

1 FOURTH FLOOR PLAN (SOUTH WING) - HVAC
SCALE: 1/8"=1'-0"

PROJECT NORTH

Washington Village Phase 1

20 Day Street Building B

Norwalk, CT

Trinity Washington Village Limited Partnership
&
the Norwalk Housing Authority

E-ICON ARCHITECTURE
101 SUMMER ST BOSTON MA 02110
617-451-3333 www.iconarch.com

CONSULTANT
CENTEK engineering
Centered on Solutions ℠
www.CentekEng.com
(203) 488-0580
(203) 488-8587 Fax
63-2 North Branford Road, Branford, CT 06405

STAMP



KEYPLAN

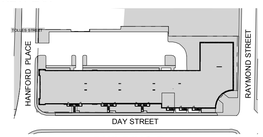

BUILDING B

N 0 4' 8' 16'

MARK	DATE	DESCRIPTION
	09-15-2014	PERMIT/ PRICING
	06-13-2014	PRICING
	11-18-2013	40% CHFA
	09-19-2013	CAM/ SPECIAL PERMIT

PROJECT NO.: 21222/CENTEK #13232.02
DRAWN BY: KHS
CHECKED BY: FRC

SHEET TITLE

BUILDING B FOURTH FLOOR PLAN (SOUTH WING) - HVAC

H-109

J:\Jobs\1323202.ME\HVAC\H-109.dwg Sep 17, 2014 - 10:20pm khs

HVAC WORK NOTES

(1) UNIT SHALL BE MOUNTED ON VIBRATION ISOLATION SUPPORTS

GENERAL NOTE:

1. COORDINATE ALL WORK WITH ALL OTHER TRADES. REFER TO OTHER TRADE'S DRAWINGS FOR ADDITIONAL INFORMATION.

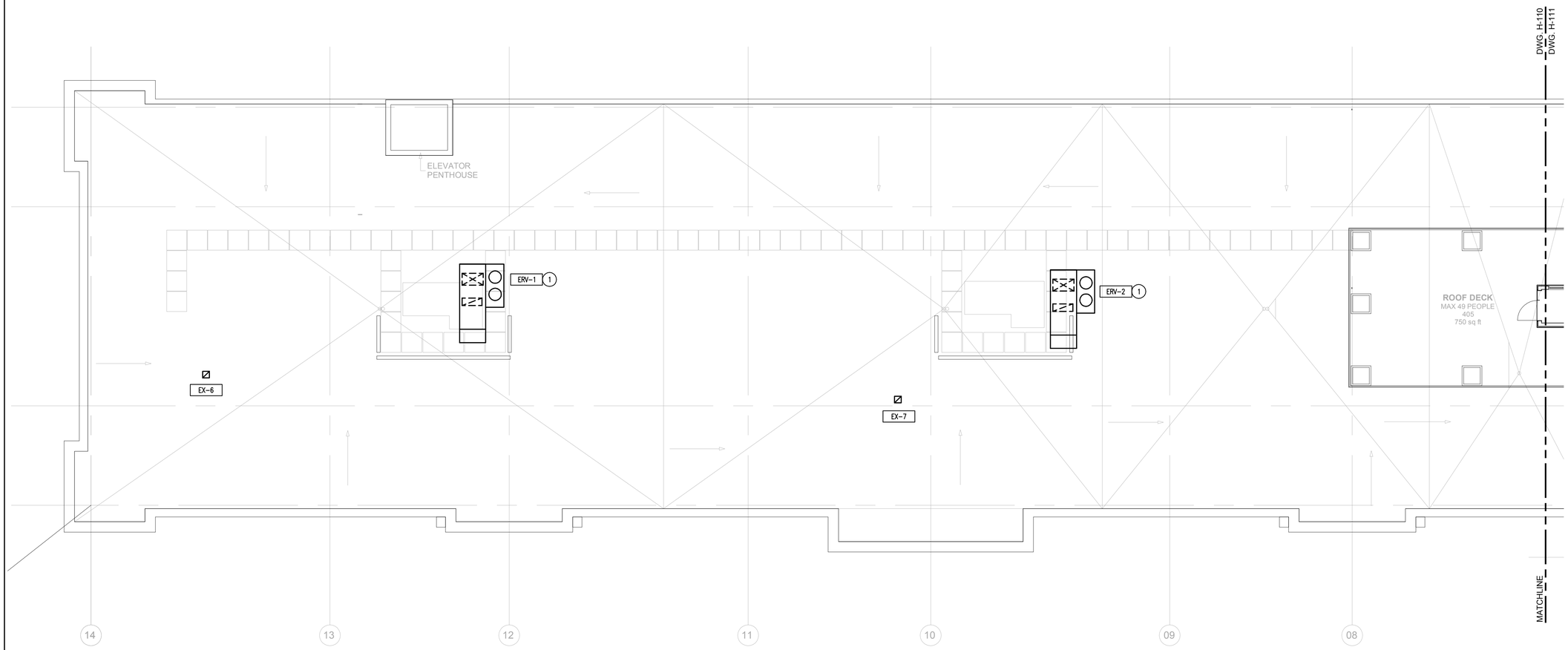

1 **ROOF PLAN (NORTH WING) - HVAC**
SCALE: 1/8"=1'-0"

PROJECT NORTH

J:\Jobs\1323202.ME\HVAC\H-110 & H-111.dwg Sep 17, 2014 - 10:21pm khs

Washington Village Phase 1

20 Day Street Building B

Norwalk, CT

Trinity Washington Village Limited Partnership
&
the Norwalk Housing Authority

E-ICON ARCHITECTURE
101 SUMMER ST BOSTON MA 02110
617-451-3333 www.iconarch.com

CONSULTANT

CENTEK engineering
Centered on Solutions SM
www.CentekEng.com
(203) 488-0580
(203) 488-8587 Fax
63-2 North Branford Road, Branford, CT 06405

STAMP



KEYPLAN

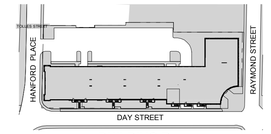

MARK	DATE	DESCRIPTION
	09-15-2014	PERMIT/ PRICING
	06-13-2014	PRICING
	11-18-2013	40% CHFA
	09-19-2013	CAM/ SPECIAL PERMIT

PROJECT NO.:	21222/CENTEK #13232.02
DRAWN BY:	KHS
CHECKED BY:	FRC

SHEET TITLE

BUILDING B ROOF PLAN (NORTH WING) - HVAC

H-110

HVAC WORK NOTES

(1) UNIT MOUNTED ON VIBRATION ISOLATION SUPPORTS

GENERAL NOTE:

1. COORDINATE ALL WORK WITH ALL OTHER TRADES. REFER TO OTHER TRADE'S DRAWINGS FOR ADDITIONAL INFORMATION.

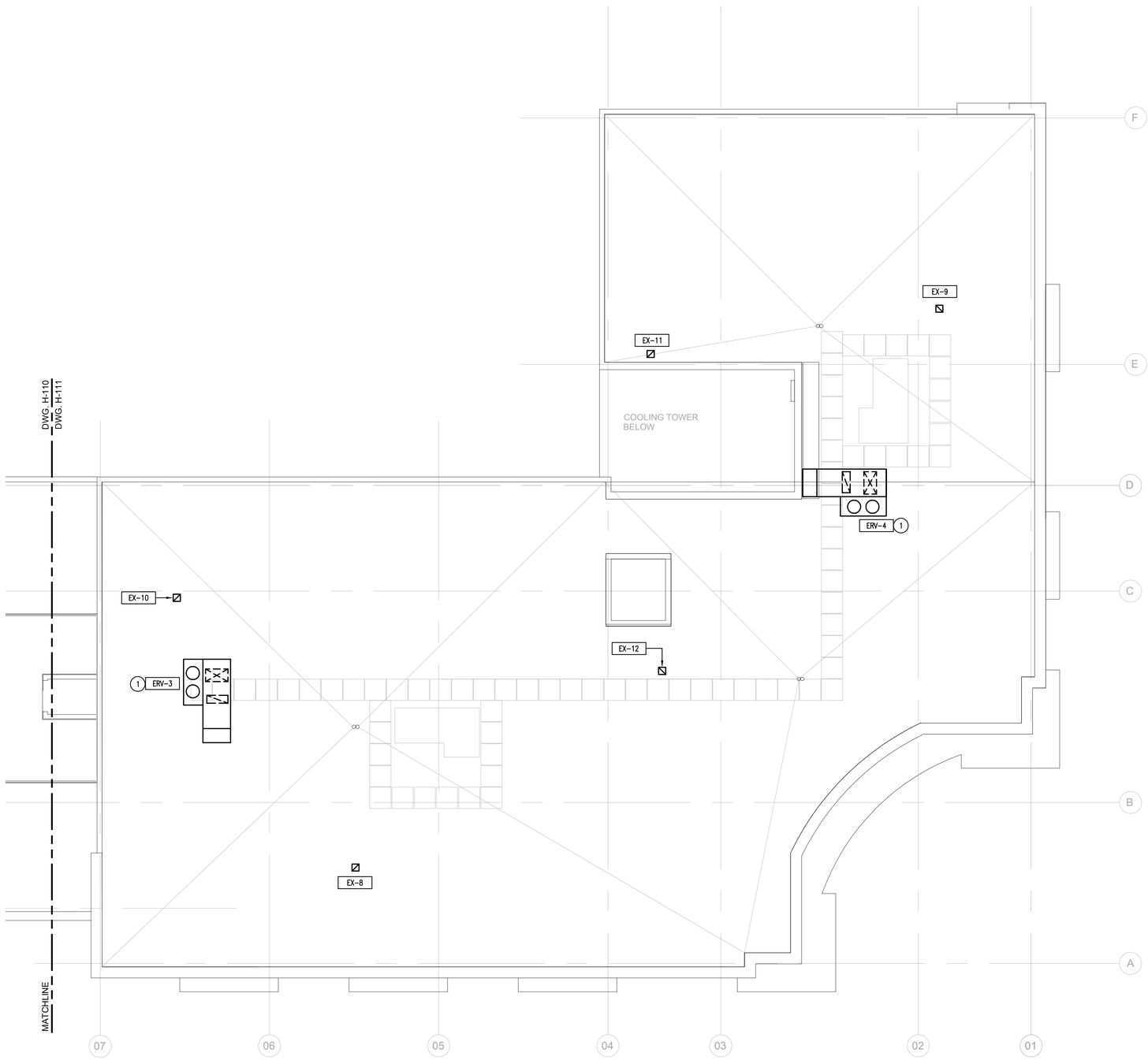

1 ROOF PLAN (SOUTH WING) - HVAC
SCALE: 1/8"=1'-0"

PROJECT NORTH

Washington Village Phase 1

20 Day Street Building B

Norwalk, CT

Trinity Washington Village Limited Partnership
&
the Norwalk Housing Authority

E-ICON ARCHITECTURE
101 SUMMER ST BOSTON MA 02110
617-451-3333 www.iconarch.com

CONSULTANT

CENTEK engineering
Centered on Solutions ℠
www.CentekEng.com
(203) 488-0580
(203) 488-8587 Fax
63-2 North Branford Road, Branford, CT 06405

STAMP



KEYPLAN

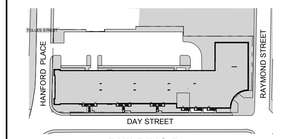

BUILDING B

N 0 4' 8' 16'

MARK	DATE	DESCRIPTION
	09-15-2014	PERMIT/ PRICING
	06-13-2014	PRICING
	11-18-2013	40% CHFA
	09-19-2013	CAM/ SPECIAL PERMIT

PROJECT NO.: 21222/CENTEK #13232.02
DRAWN BY: KHS
CHECKED BY: FRC

SHEET TITLE

BUILDING B ROOF PLAN (SOUTH WING) - HVAC

H-111

J:\Jobs\13232.02 ME\HVAC\H-110 & H-111.dwg Sep 17, 2014 - 10:21pm khs

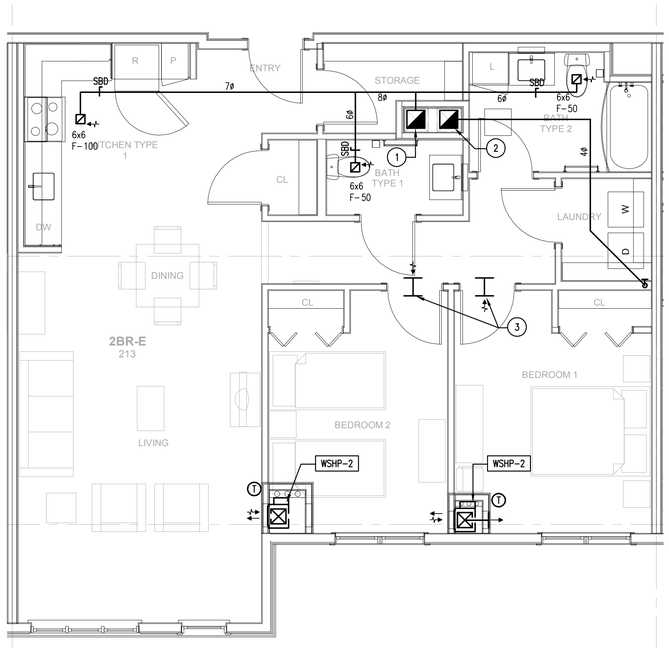

5 **2BR TYPE E - HVAC**
SCALE: 1/4"=1'-0" ANSI TYPE B

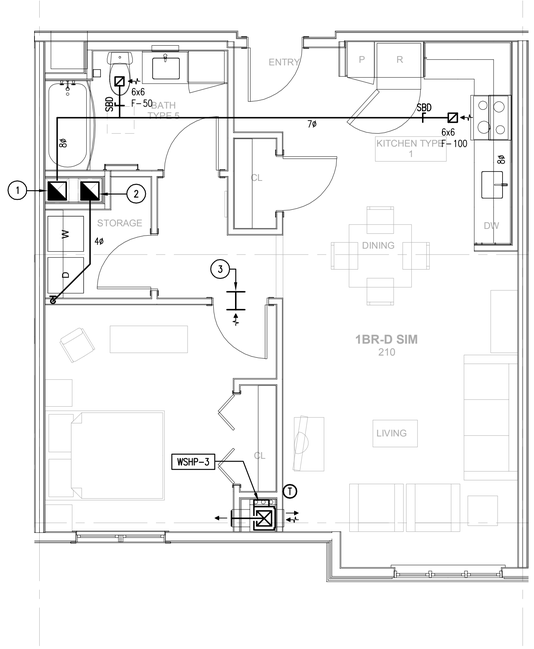

4 **1BR TYPE D - HVAC**
SCALE: 1/4"=1'-0" ANSI TYPE B

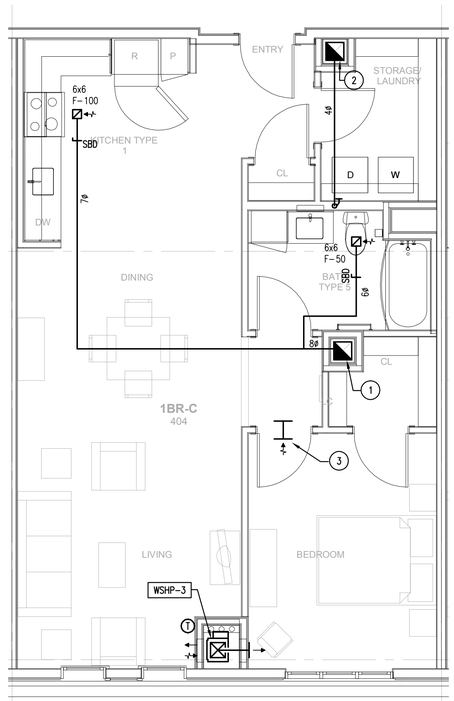

3 **1BR TYPE C - HVAC**
SCALE: 1/4"=1'-0" ANSI TYPE B

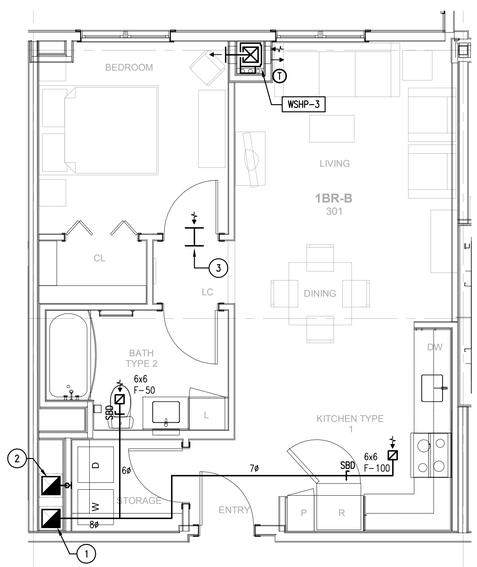

2 **1BR TYPE B - HVAC**
SCALE: 1/4"=1'-0" ANSI TYPE B

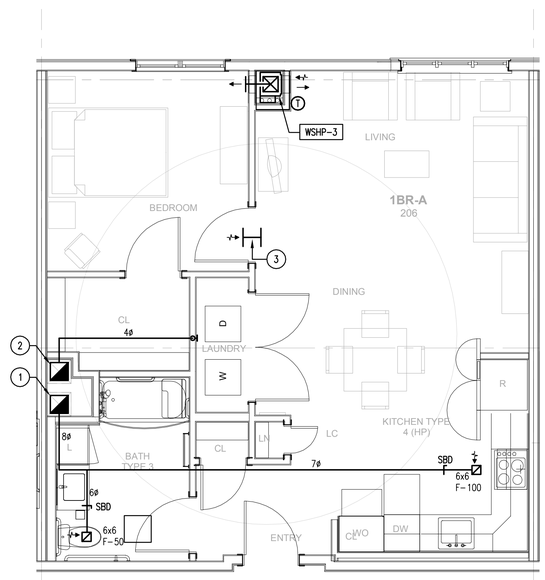

1 **1BR TYPE A - HVAC**
SCALE: 1/4"=1'-0" ANSI TYPE A

PROJECT NORTH

HVAC WORK NOTES

1. 12x12 EXHAUST DUCT RISER.
2. 12x12 DRYER EXHAUST DUCT RISER.
3. 12x6 TRANSFER DUCT.

GENERAL NOTE:

1. COORDINATE ALL WORK WITH ALL OTHER TRADES. REFER TO OTHER TRADE'S DRAWINGS FOR ADDITIONAL INFORMATION.

Washington Village Phase 1

20 Day Street Building B

Norwalk, CT

Trinity Washington Village Limited Partnership
&
the Norwalk Housing Authority

E-ICON ARCHITECTURE
101 SUMMER ST BOSTON MA 02110
617-451-3333 www.iconarch.com

CONSULTANT
CENTEK engineering
Centered on Solutions ℠
www.CentekEng.com
(203) 488-0580
(203) 488-8587 Fax
63-2 North Branford Road, Branford, CT 06405

STAMP



KEYPLAN

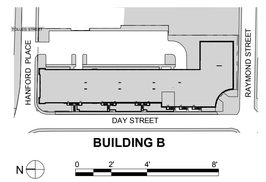

MARK	DATE	DESCRIPTION
	09-15-2014	PERMIT/ PRICING
	06-13-2014	PRICING
	11-18-2013	40% CHFA
	09-19-2013	CAM/ SPECIAL PERMIT

PROJECT NO.: 21222/CENTEK #13232.02
DRAWN BY: KHS
CHECKED BY: FRC

SHEET TITLE

TYPICAL UNIT PLANS
BUILDING B
HVAC

H-201

J:\Jobs\1323202.ME\HVAC\H-201.dwg Sep 17, 2014 - 10:21pm khs

HVAC WORK NOTES

1. 12x12 EXHAUST DUCT RISER.
2. 12x12 DRYER EXHAUST DUCT RISER.
3. 12x6 TRANSFER DUCT.

GENERAL NOTE:

1. COORDINATE ALL WORK WITH ALL OTHER TRADES. REFER TO OTHER TRADE'S DRAWINGS FOR ADDITIONAL INFORMATION.

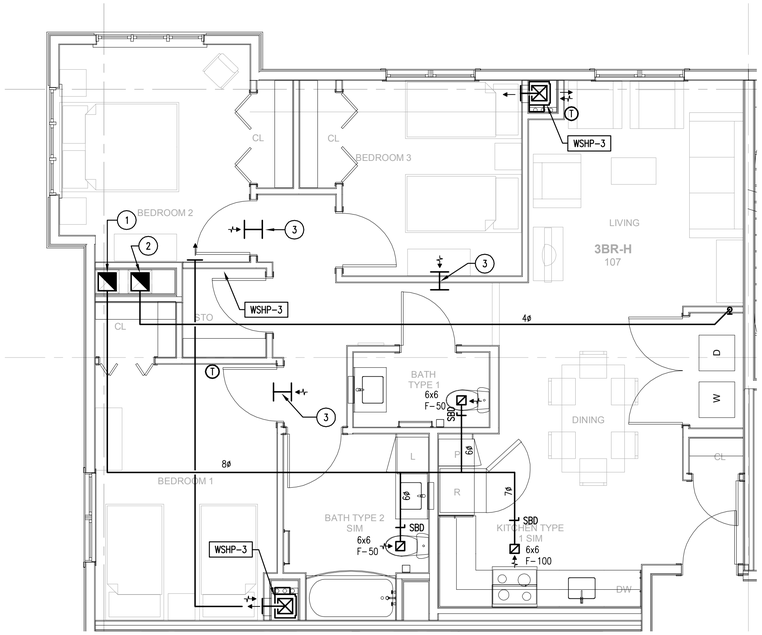

3 3BR TYPE H - HVAC
SCALE: 1/4"=1'-0" ANSI TYPE A

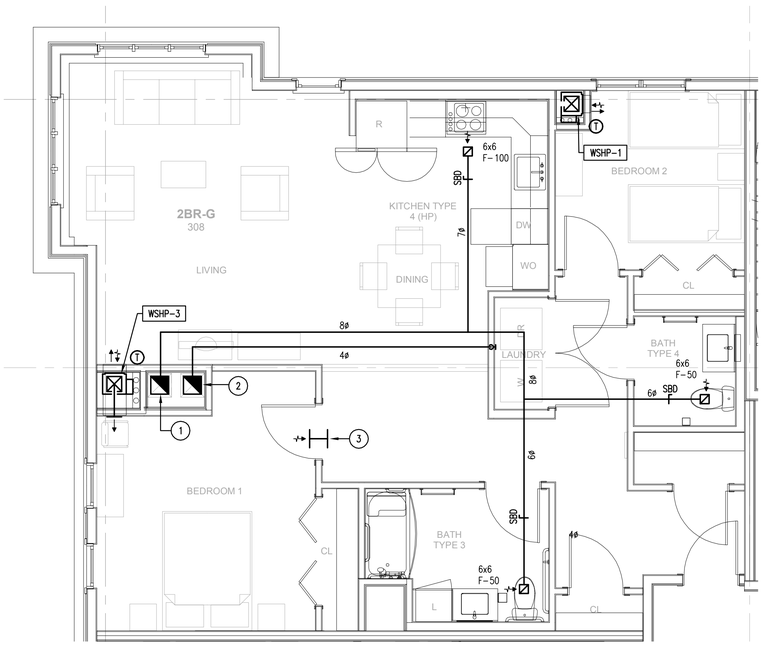

2 2BR TYPE G - HVAC
SCALE: 1/4"=1'-0" ANSI TYPE A

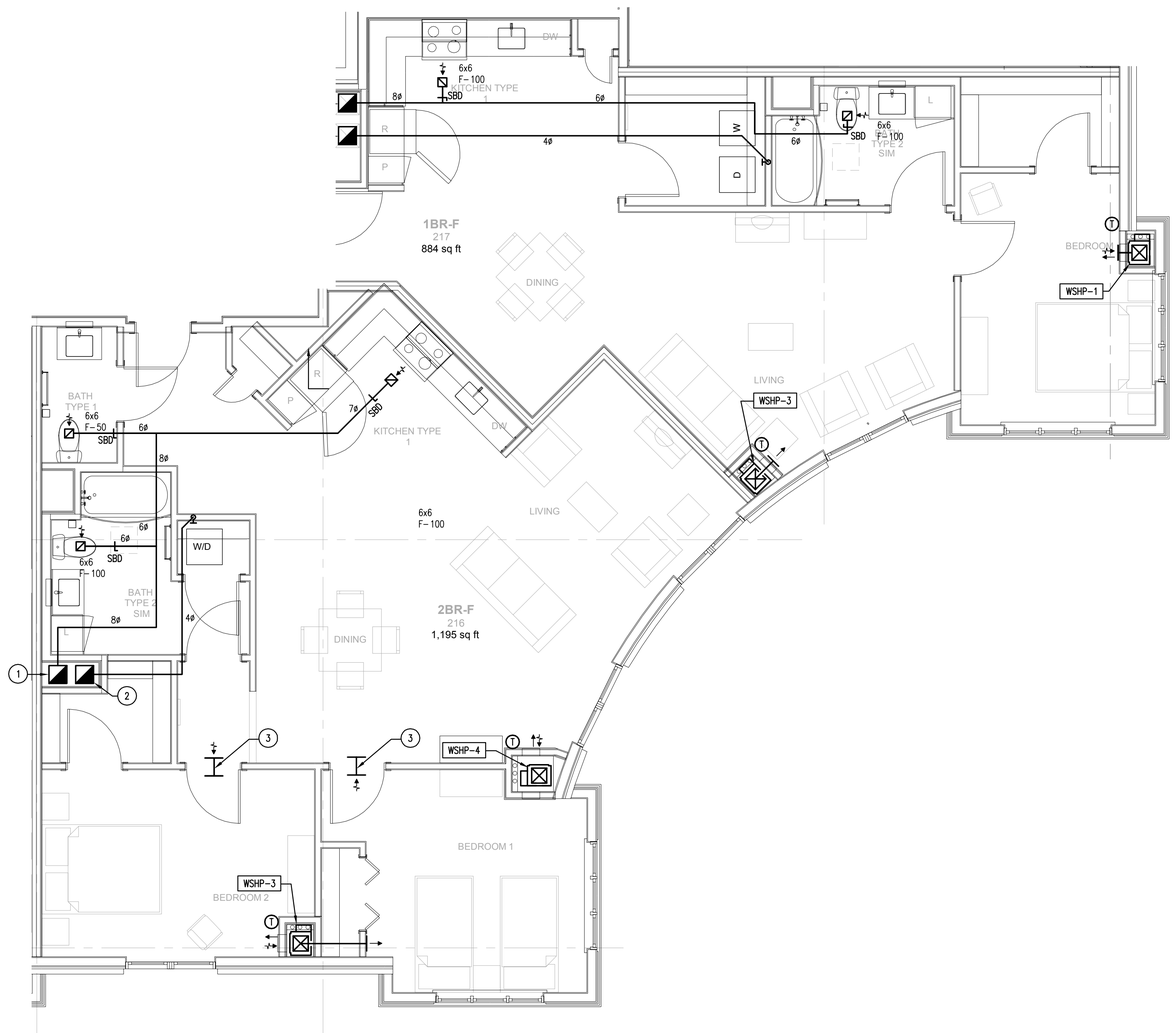

1 2BR ARC PAIR TYPE F - HVAC
SCALE: 1/4"=1'-0" ANSI TYPE B

PROJECT NORTH

J:\Jobs\1323202.ME\HVAC\H-202.dwg Sep 17, 2014 - 10:22pm khs

Washington Village Phase 1

20 Day Street Building B

Norwalk, CT

Trinity Washington Village Limited Partnership
&
the Norwalk Housing Authority

E-ICON ARCHITECTURE
101 SUMMER ST BOSTON MA 02110
617-451-3333 www.iconarch.com

CONSULTANT
CENTEK engineering
Centered on Solutions ℠
www.CentekEng.com
(203) 488-0580
(203) 488-8587 Fax
63-2 North Branford Road, Branford, CT 06405

STAMP



KEYPLAN

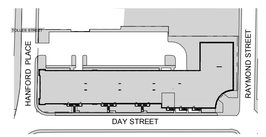

BUILDING B

N 0 2' 4' 8'

MARK	DATE	DESCRIPTION
	09-15-2014	PERMIT/ PRICING
	06-13-2014	PRICING
	11-18-2013	40% CHFA
	09-19-2013	CAM/ SPECIAL PERMIT

PROJECT NO.:	21222/CENTEK #13232.02
DRAWN BY:	KHS
CHECKED BY:	FRC

SHEET TITLE

TYPICAL UNIT PLANS
BUILDING B
HVAC

H-202

HVAC WORK NOTES

1. 12x12 EXHAUST DUCT RISER.
2. 12 x12 DRYER EXHAUST DUCT RISER.
3. 12x6 TRANSFER DUCT.

GENERAL NOTE:

1. COORDINATE ALL WORK WITH ALL OTHER TRADES. REFER TO OTHER TRADE'S DRAWINGS FOR ADDITIONAL INFORMATION.

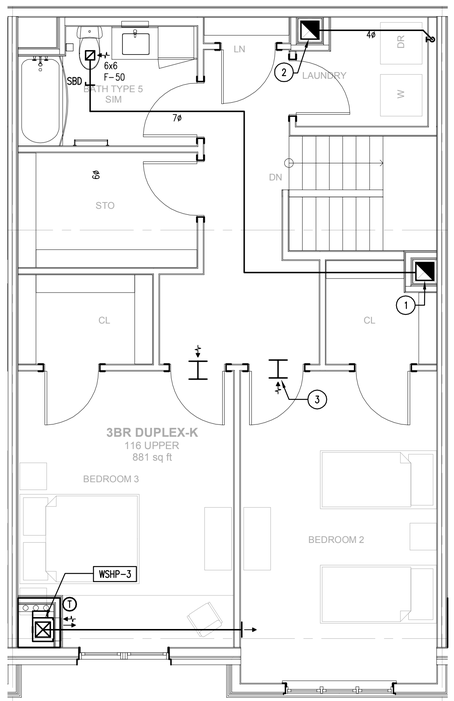

3 **3BR DUPLEX TYPE K (UPPER LEVEL) - HVAC**
SCALE: 1/4"=1'-0" ANSI TYPE B

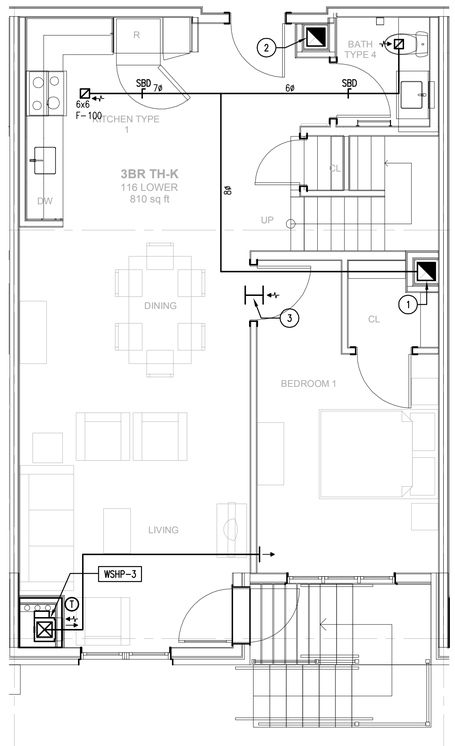

2 **3BR DUPLEX TYPE K (LOWER LEVEL) - HVAC**
SCALE: 1/4"=1'-0" ANSI TYPE B

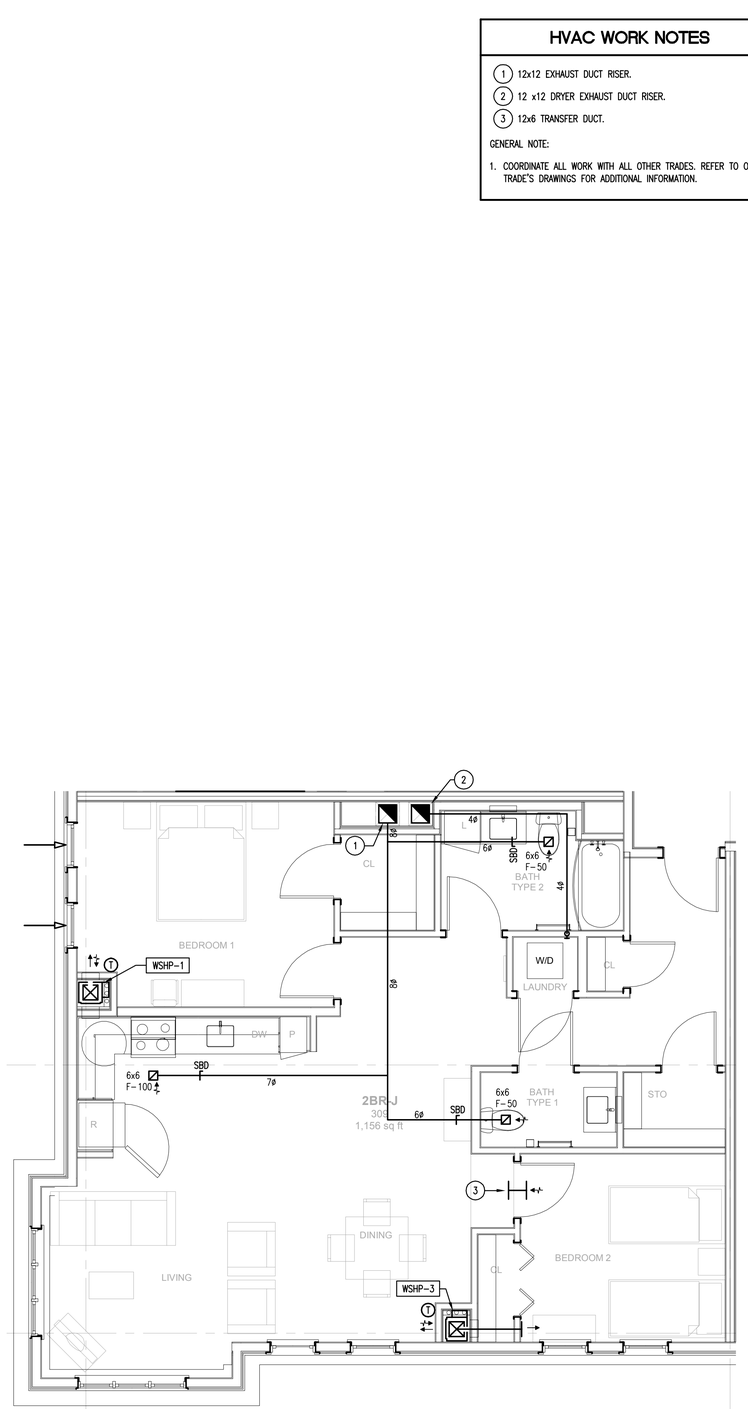

1 **2BR TYPE J - HVAC**
SCALE: 1/4"=1'-0" ANSI TYPE B

PROJECT NORTH

Washington Village Phase 1

20 Day Street Building B

Norwalk, CT

Trinity Washington Village Limited Partnership
&
the Norwalk Housing Authority

E-ICON ARCHITECTURE
101 SUMMER ST BOSTON MA 02110
617-451-3333 www.iconarch.com

CONSULTANT

CENTEK engineering
Centered on Solutions ℠
www.CentekEng.com
(203) 488-0580
(203) 488-8587 Fax
63-2 North Branford Road, Branford, CT 06405

STAMP



KEYPLAN

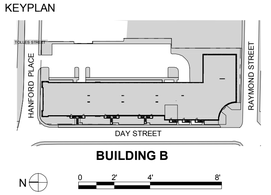

MARK	DATE	DESCRIPTION
	09-15-2014	PERMIT/ PRICING
	06-13-2014	PRICING
	11-18-2013	40% CHFA
	09-19-2013	CAM/ SPECIAL PERMIT

PROJECT NO.: 21222/CENTEK #13232.02
DRAWN BY: KHS
CHECKED BY: FRC

SHEET TITLE

TYPICAL UNIT PLANS
BUILDING B
HVAC

H-203

J:\Jobs\13232.02\ME\HVAC\H-203.dwg Sep 17, 2014 - 10:22pm khs

HVAC WORK NOTES

1. 12x12 EXHAUST DUCT RISER.
2. 12 x12 DRYER EXHAUST DUCT RISER.
3. 12x6 TRANSFER DUCT.

GENERAL NOTE:

1. COORDINATE ALL WORK WITH ALL OTHER TRADES. REFER TO OTHER TRADE'S DRAWINGS FOR ADDITIONAL INFORMATION.

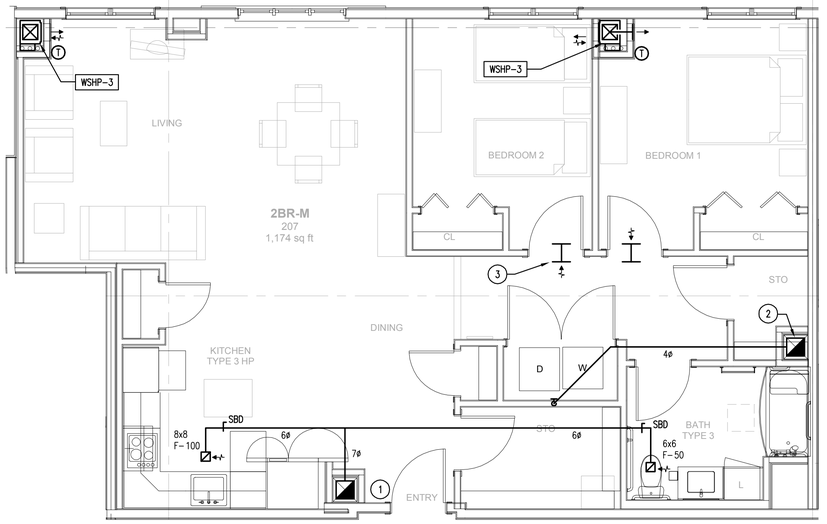

2 **2BR TYPE M - HVAC**
SCALE: 1/4"=1'-0"

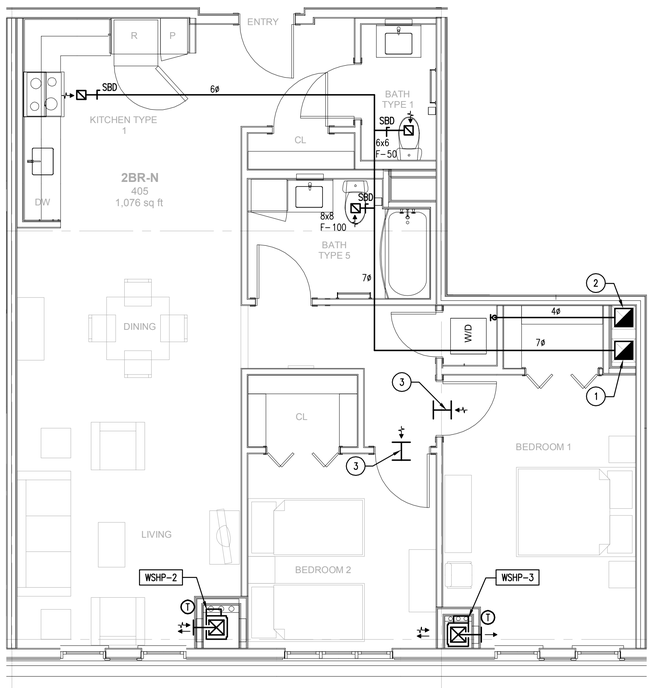

3 **2BR TYPE N - HVAC**
SCALE: 1/4"=1'-0"

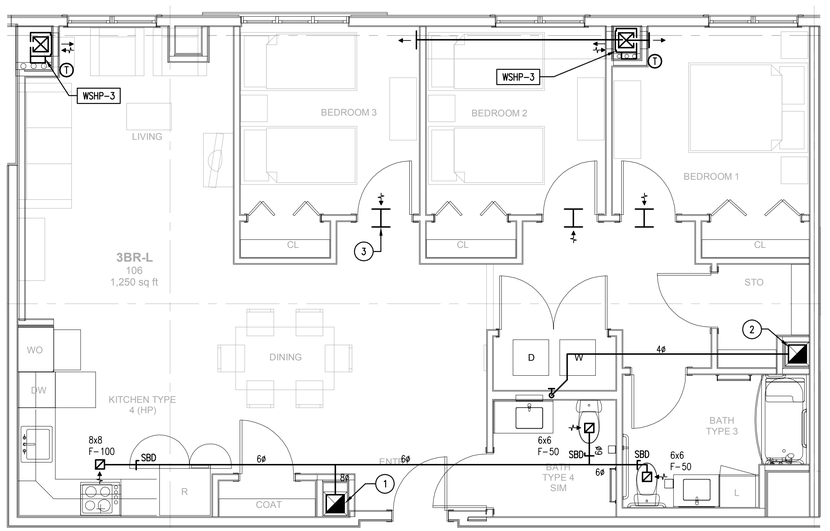

1 **3BR TYPE L - HVAC**
SCALE: 1/4"=1'-0"

PROJECT NORTH

Washington Village Phase 1

20 Day Street Building B

Norwalk, CT

Trinity Washington Village Limited Partnership
&
the Norwalk Housing Authority

E-ICON ARCHITECTURE
101 SUMMER ST BOSTON MA 02110
617-451-3333 www.iconarch.com

CONSULTANT
CENTEK engineering
Centered on Solutions SM
www.CentekEng.com
(203) 488-0580
(203) 488-8587 Fax
63-2 North Branford Road, Branford, CT 06405

STAMP



KEYPLAN

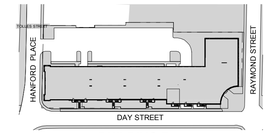

BUILDING B

N 0 2' 4' 8'

MARK	DATE	DESCRIPTION
	09-15-2014	PERMIT/ PRICING
	06-13-2014	PRICING
	11-18-2013	40% CHFA
	09-19-2013	CAM/ SPECIAL PERMIT

PROJECT NO.: 21222/CENTEK #13232.02
DRAWN BY: KHS
CHECKED BY: FRC

SHEET TITLE

TYPICAL UNIT PLANS
BUILDING B
HVAC

H-204

J:\Jobs\13232.02\MEH\HVAC\H-204.dwg Sep 17, 2014 - 10:22pm khs

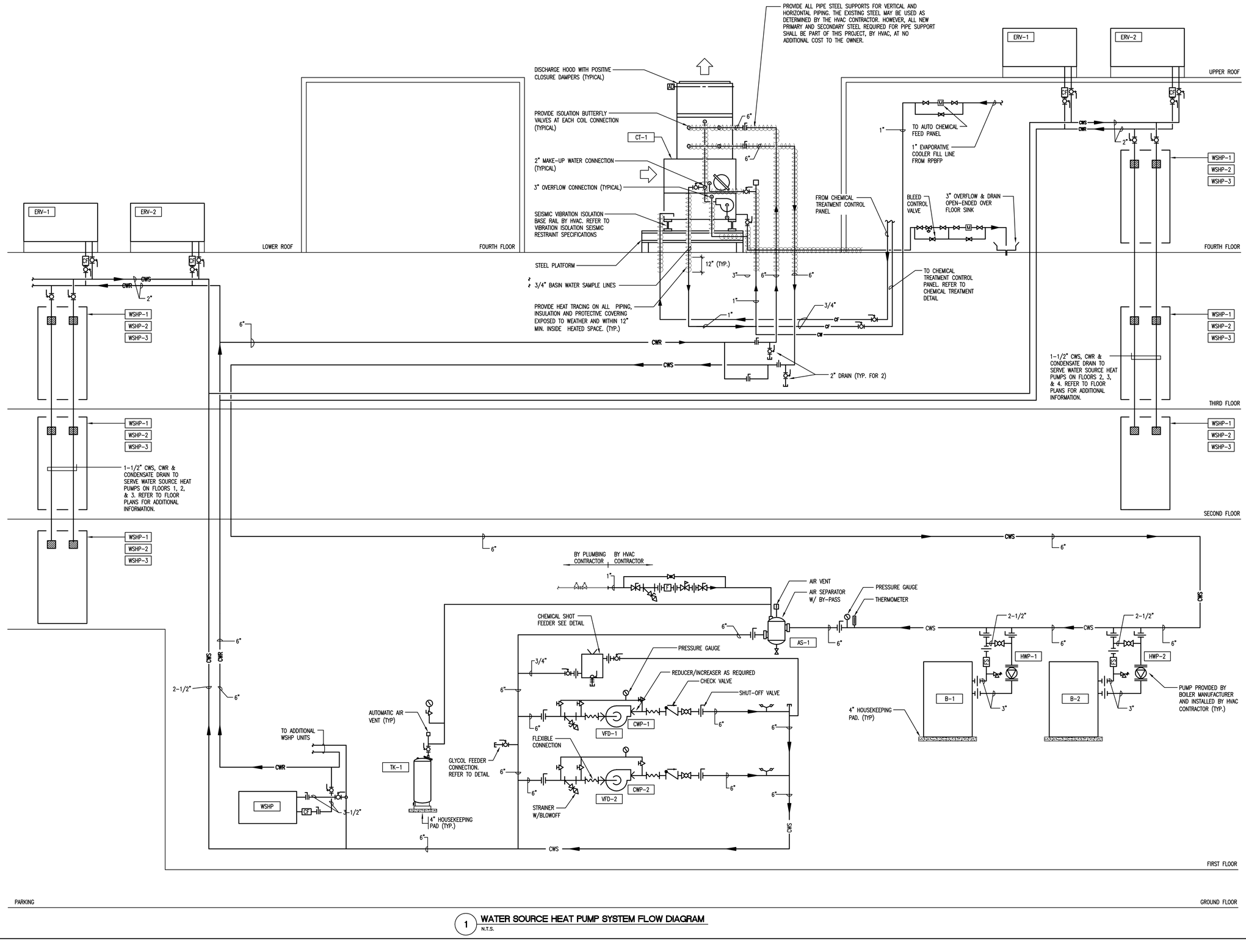

1 WATER SOURCE HEAT PUMP SYSTEM FLOW DIAGRAM
N.T.S.

J:\Jobs\1323202.ME\HVAC\H-301.dwg Sep 17, 2014 - 10:23pm khs

Washington Village Phase 1

20 Day Street Building B

Norwalk, CT

Trinity Washington Village Limited Partnership
&
the Norwalk Housing Authority

E-ICON ARCHITECTURE
101 SUMMER ST BOSTON MA 02110
617-451-3333 www.iconarch.com

CONSULTANT
CENTEK engineering
Centered on Solutions SM
www.CentekEng.com
(203) 488-0580
(203) 488-8587 Fax
63-2 North Branford Road, Branford, CT 06405

STAMP



KEYPLAN

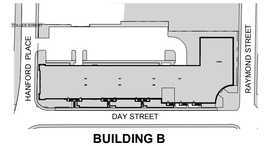

MARK	DATE	DESCRIPTION
	09-15-2014	PERMIT/ PRICING
	06-13-2014	PRICING
	11-18-2013	40% CHFA
	09-19-2013	CAM/ SPECIAL PERMIT

PROJECT NO.: 21222/CENTEK #13232.02
DRAWN BY: KHS
CHECKED BY: FRC

SHEET TITLE

HVAC RISER

H-301

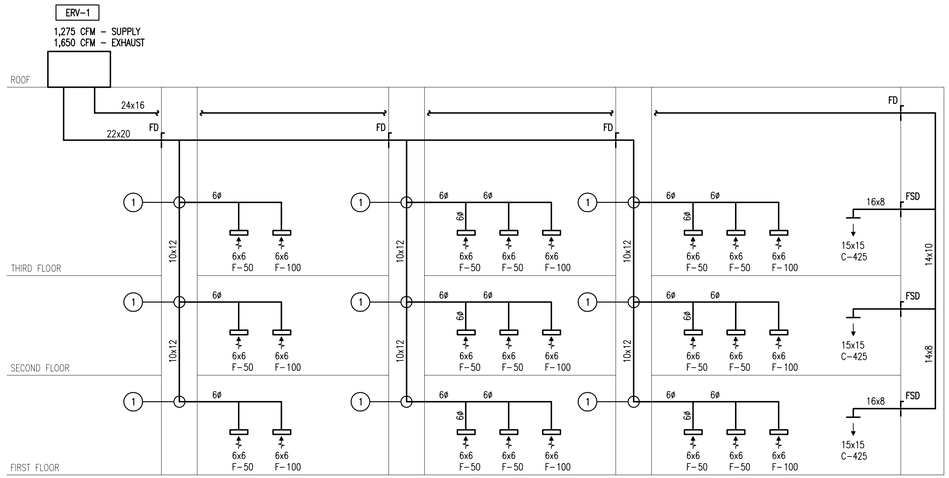

1 **MAKE UP AIR / EXHAUST RISER DIAGRAM (NORTH SIDE)**
N.T.S.

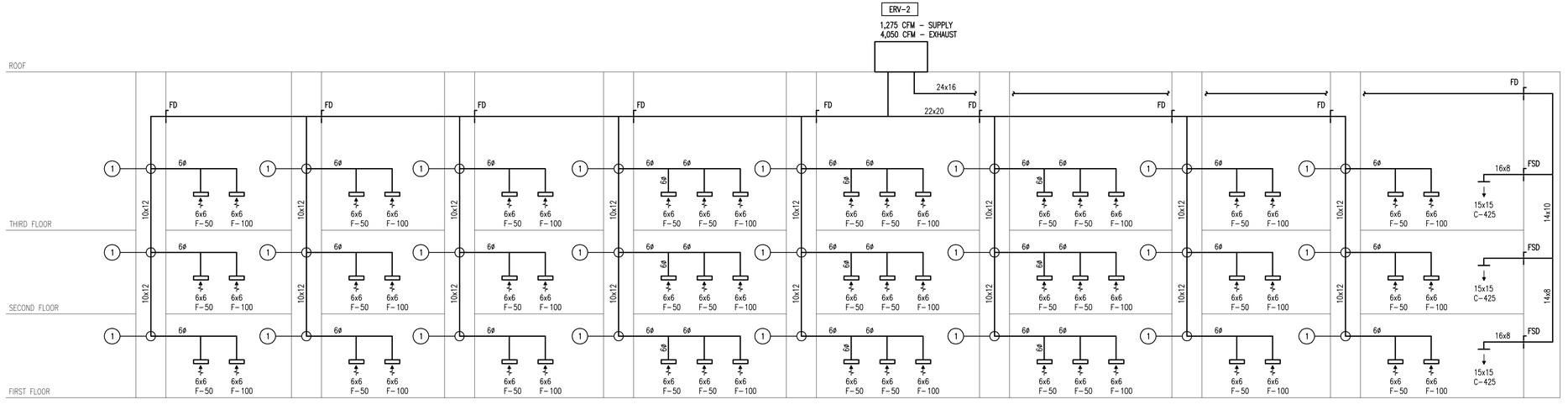

2 **MAKE UP AIR / EXHAUST RISER DIAGRAM (NORTH SIDE)**
N.T.S.

KEY NOTES

1. 6"ØX22"H STUB DUCT. SIMILAR TO EXHAUSTO MODEL LSR06.

Washington Village Phase 1

20 Day Street Building B

Norwalk, CT

Trinity Washington Village Limited Partnership
&
the Norwalk Housing Authority

E-ICON ARCHITECTURE
101 SUMMER ST BOSTON MA 02110
617-451-3333 www.iconarch.com

CONSULTANT
CENTEK engineering
Centered on Solutions ℠
www.CentekEng.com
(203) 488-0580
(203) 488-8587 Fax
63-2 North Branford Road, Branford, CT 06405

STAMP



KEYPLAN

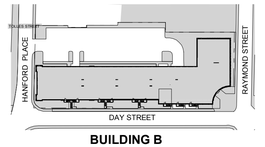

BUILDING B

N

MARK	DATE	DESCRIPTION
	09-15-2014	PERMIT/ PRICING
	06-13-2014	PRICING
	11-18-2013	40% CHFA
	09-19-2013	CAM/ SPECIAL PERMIT

PROJECT NO.: 21222/CENTEK #13232.02
DRAWN BY: KHS
CHECKED BY: FRC

SHEET TITLE

HVAC RISER DIAGRAMS

H-302

J:\Jobs\13232021\MEHVAC\H-302.dwg Sep 17, 2014 - 10:23pm khs

KEY NOTES

(1) 6"ØX22"H STUB DUCT. SIMILAR TO EXHAUSTO MODEL LSR06.

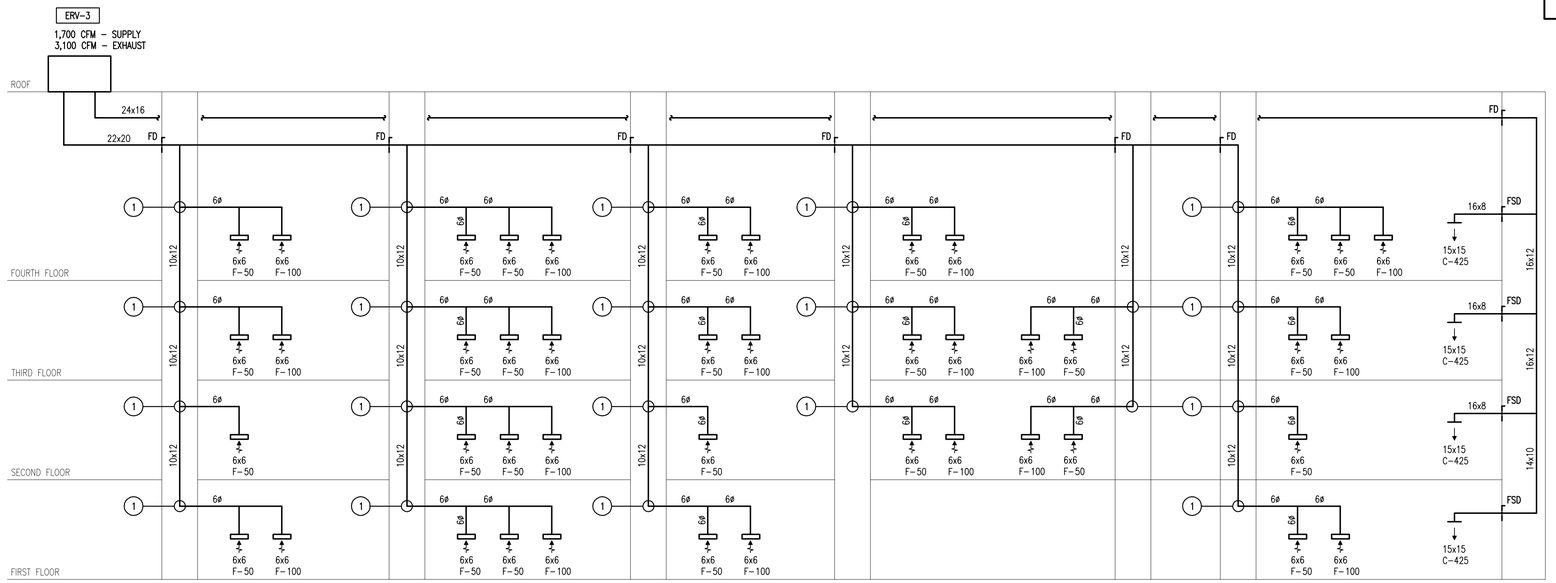

1 **MAKE UP AIR / EXHAUST RISER DIAGRAM (SOUTH SIDE)**
N.T.S.

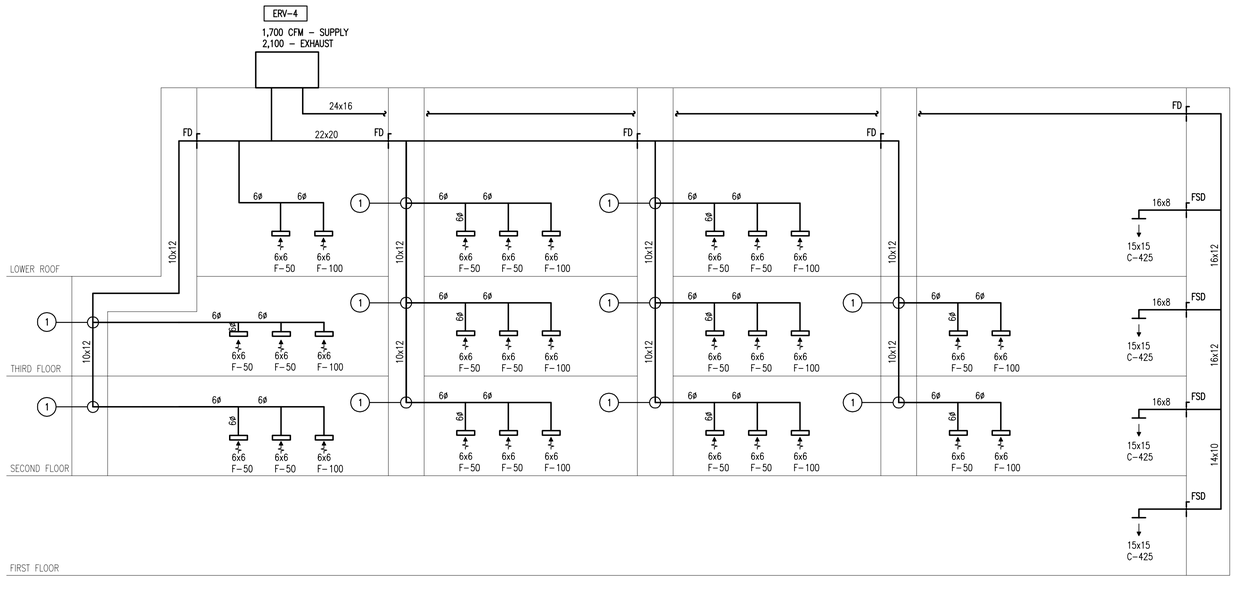

2 **MAKE UP AIR / EXHAUST RISER DIAGRAM (SOUTH SIDE)**
N.T.S.

J:\Jobs\13232\02.MEH\HVAC\H-303.dwg Sep 17, 2014 - 10:23pm khs

Washington Village Phase 1

20 Day Street Building B

Norwalk, CT

Trinity Washington Village Limited Partnership
&
the Norwalk Housing Authority

E-ICON ARCHITECTURE
101 SUMMER ST BOSTON MA 02110
617-451-3333 www.iconarch.com

CONSULTANT

CENTEK engineering
Centered on Solutions ℠
www.CentekEng.com
(203) 488-0580
(203) 488-8587 Fax
63-2 North Branford Road, Branford, CT 06405

STAMP



KEYPLAN

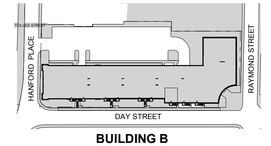

BUILDING B

N

MARK	DATE	DESCRIPTION
	09-15-2014	PERMIT/ PRICING
	06-13-2014	PRICING
	11-18-2013	40% CHFA
	09-19-2013	CAM/ SPECIAL PERMIT

PROJECT NO.: 21222/CENTEK #13232.02
DRAWN BY: KHS
CHECKED BY: FRC

SHEET TITLE

HVAC RISER DIAGRAMS

H-303

KEY NOTES

1. STUB DUCT.
2. DRYER EXHAUST FAN SHALL BE EXHAUSTO BESB SERIES WITH MEC 18 CONTROLLER, PRESSURE TRANSDUCER AND RISER PROBE FOR DRYER EXHAUST STACK SYSTEM. CONTROL WIRING PER MANUFACTURER REQUIREMENTS BY ATC. POWER WIRING BY E.C.

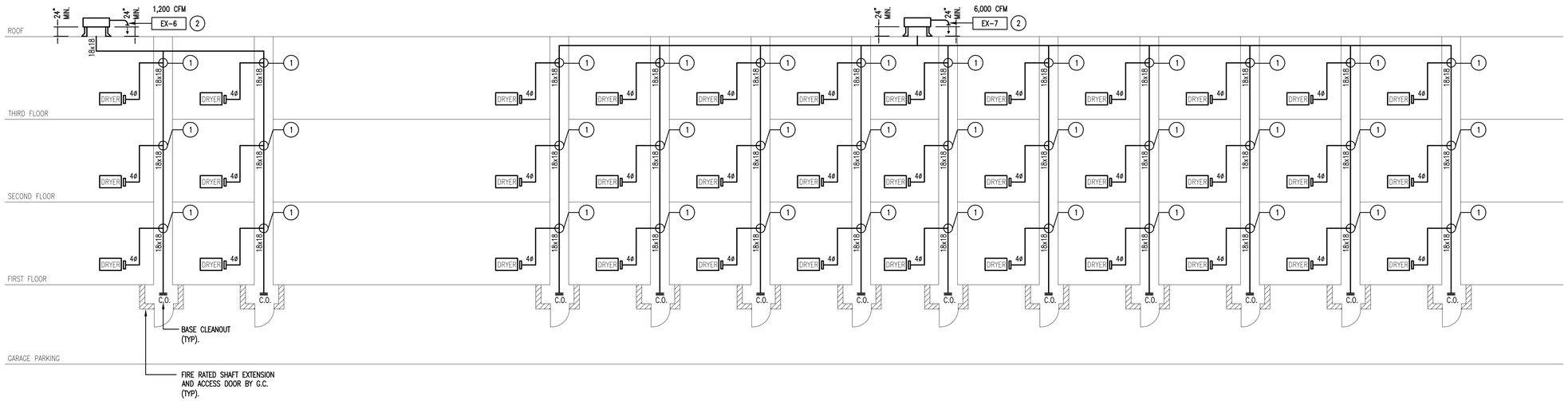

1 DRYER EXHAUST RISER DIAGRAM
N.T.S.

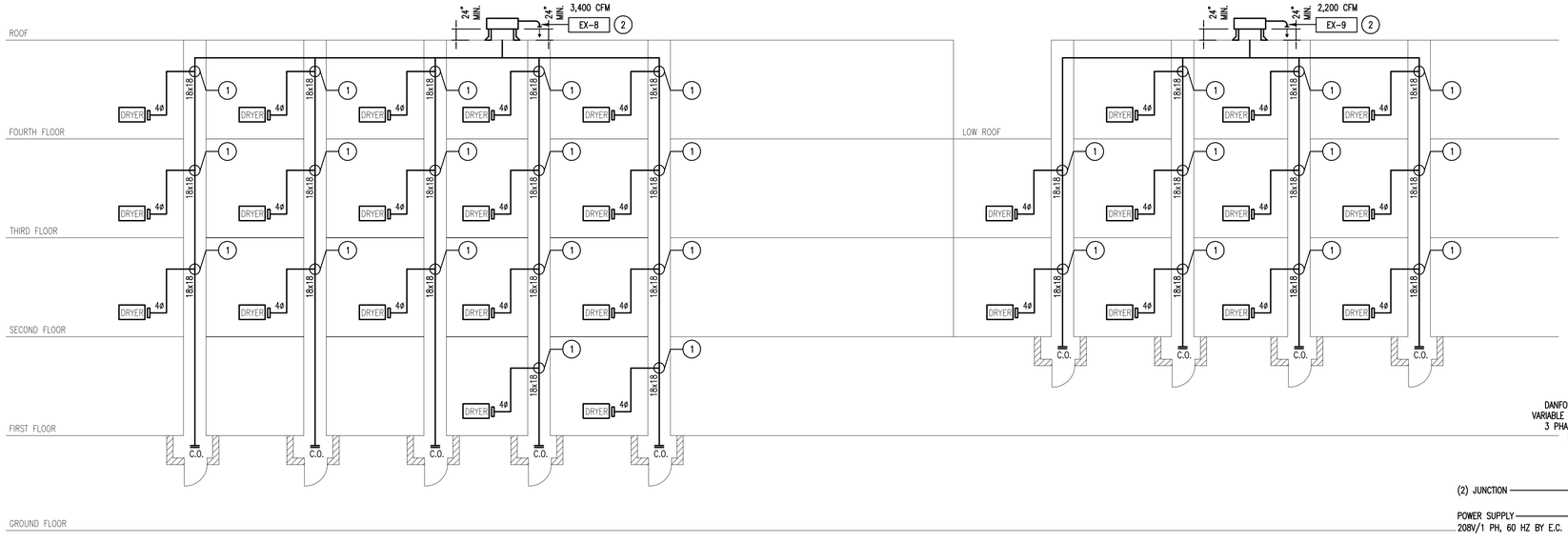

2 DRYER EXHAUST RISER DIAGRAM
N.T.S.

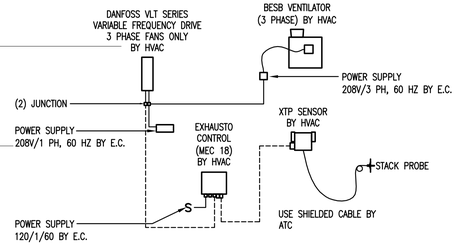

3 DRYER EXHAUST WIRING DIAGRAM
N.T.S.

Washington Village Phase 1

20 Day Street Building B

Norwalk, CT

Trinity Washington Village Limited Partnership
&
the Norwalk Housing Authority

E-ICON ARCHITECTURE
101 SUMMER ST BOSTON MA 02110
617-451-3333 www.iconarch.com

CONSULTANT
CENTEK engineering
Centered on Solutions ℠
www.CentekEng.com
(203) 488-0580
(203) 488-8587 Fax
63-2 North Branford Road, Branford, CT 06405

STAMP



KEYPLAN

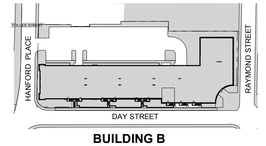

MARK	DATE	DESCRIPTION
	09-15-2014	PERMIT/ PRICING
	06-13-2014	PRICING
	11-18-2013	40% CHFA
	09-19-2013	CAM/ SPECIAL PERMIT

PROJECT NO.: 21222/CENTEK #13232.02
DRAWN BY: KHS
CHECKED BY: FRC

SHEET TITLE

DRYER EXHAUST RISER

H-304

J:\Jobs\13232.02\MEHVAC\H-304.dwg Sep 17, 2014 - 10:24pm khs

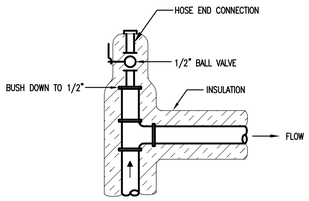

1 **MANUAL AIR VENT**
N.T.S.

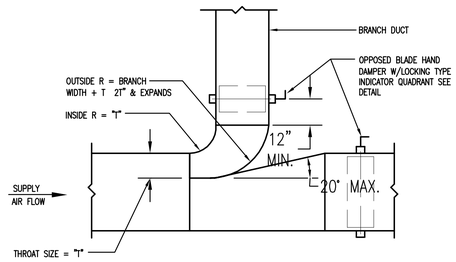

2 **RECTANGULAR LOW PRESS. DUCT BRANCH W/THROAT AND VOLUME DAMPER**
N.T.S.

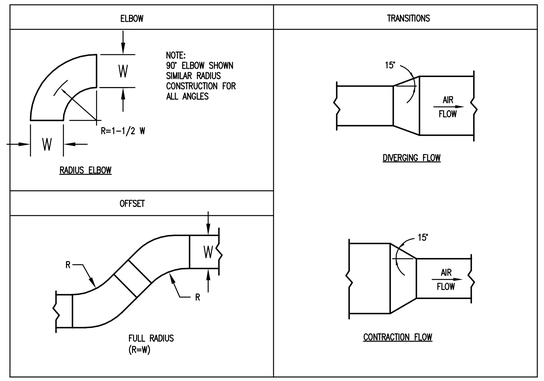

3 **RECTANGULAR OR ROUND TRANSITIONS, OFFSETS AND ELBOWS**
N.T.S.

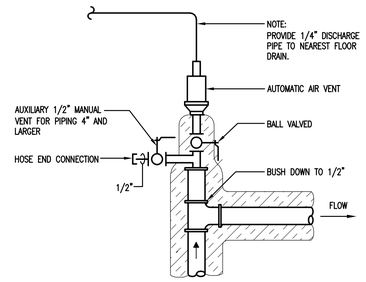

4 **AUTOMATIC AIR VENT**
N.T.S.

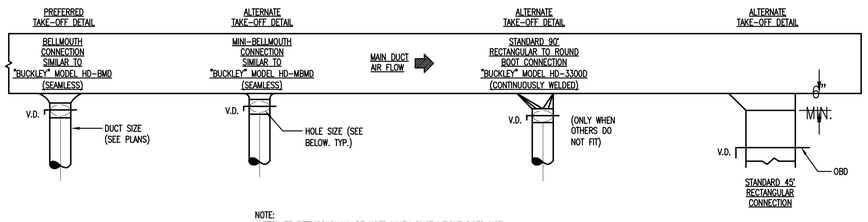

NOTE:
ALTERNATE FITTINGS SHALL BE USED WHEN DUCT HEIGHT DOES NOT PERMIT THE USE OF THE PREFERRED FULL SIZE BELLMOUTH. SUBMIT FITTINGS FOR REVIEW BY ENGINEER PRIOR TO INSTALLATION

THIS DETAIL APPLIES TO SINGLE TAKEOFFS TO DIFFUSER AS WELL AS BRANCH TAKEOFFS. IT ALSO APPLIES TO TAKEOFFS IN THE HORIZONTAL AS WELL AS VERTICAL DIRECTION.

5 **DUCT TAKEOFFS**
N.T.S.

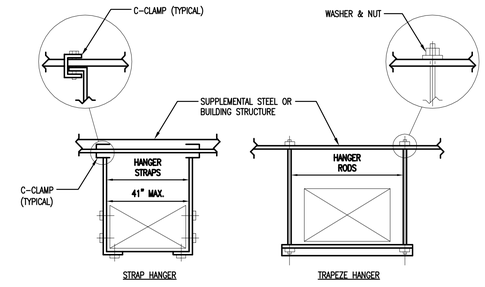

NOTE:
1. NO POP RIVETS ALLOWED, USE SELF-TAPPING SHEETMETAL SCREWS ONLY.

6 **DUCT HANGER**
N.T.S.

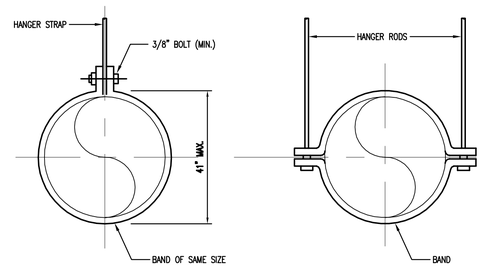

7 **ROUND DUCT HANGERS**
N.T.S.

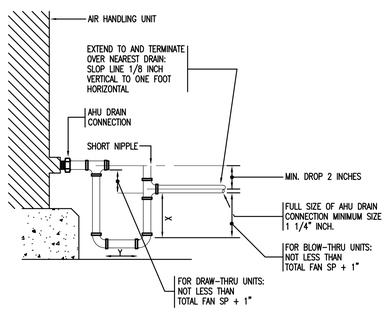

NOTE: 2X+Y SHALL EQUAL TOTAL FAN SP+2" (MINIMUM)

8 **TYPICAL AIR HANDLING UNIT CASING DRAIN**
N.T.S.

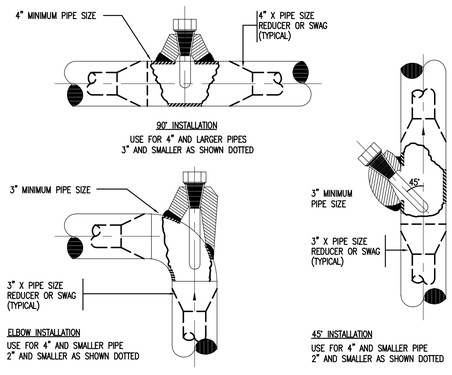

9 **TYPICAL THERMOWELL INSTALLATION**
N.T.S.

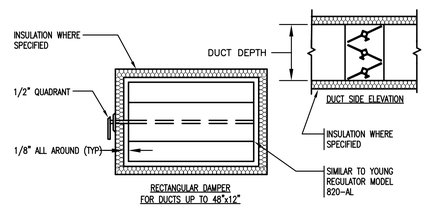

NOTES:
1. FOR RECTANGULAR DUCTS OVER 12" HIGH USE HIGH PRESSURE OBD.
2. ALL BRANCH DUCTS (SUPPLY, RETURN & EXHAUST) SHALL HAVE VOLUME DAMPERS, INCLUDING RUNOUTS TO DIFFUSERS.
3. ALL QUADRANT OPERATORS SHALL BE EXTENDED TO OUTSIDE OF INSULATION.
4. FOR DUCT UNDER 12" IN HEIGHT NOT EXCEEDING 2" PRESSURE CLASS.

10 **VOLUME DAMPER**
N.T.S.

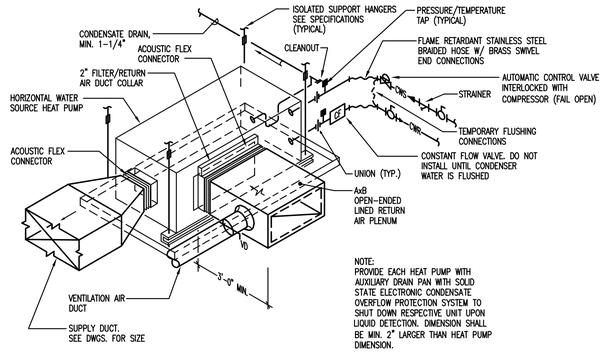

NOTE:
PROVIDE EACH HEAT PUMP WITH AUXILIARY DRAIN PAN WITH SOLID STATE ELECTRONIC CONDENSATE OVERFLOW PROTECTION SYSTEM TO SHUT DOWN RESPECTIVE UNIT UPON LIQUID DETECTION. DIMENSION SHALL BE MIN. 2" LARGER THAN HEAT PUMP DIMENSION.

11 **WATER SOURCE HEAT PUMP DETAIL**
N.T.S.

Washington Village Phase 1

20 Day Street Building B

Norwalk, CT

Trinity Washington Village Limited Partnership
&
the Norwalk Housing Authority

E-ICON ARCHITECTURE
101 SUMMER ST BOSTON MA 02110
617-451-3333 www.iconarch.com

CONSULTANT
CENTEK engineering
Centered on Solutions SM
www.CentekEng.com
(203) 488-0580
(203) 488-8587 Fax
63-2 North Branford Road, Branford, CT 06405

STAMP



KEYPLAN

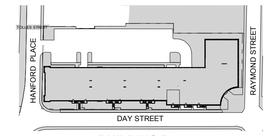

BUILDING B

N

MARK	DATE	DESCRIPTION
	09-15-2014	PERMIT/ PRICING
	06-13-2014	PRICING
	11-18-2013	40% CHFA
	09-19-2013	CAM/ SPECIAL PERMIT

PROJECT NO.: 21222/CENTEK #13232.02
DRAWN BY: KHS
CHECKED BY: FRC

SHEET TITLE

HVAC DETAILS

H-401

J:\Jobs\13232.02 MF\HVAC\H-401_402_403.dwg Sep 17, 2014 - 10:24pm khs

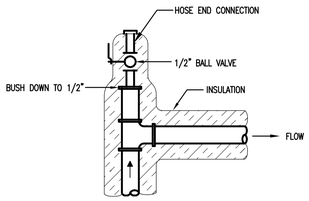

1 **MANUAL AIR VENT**
N.T.S.

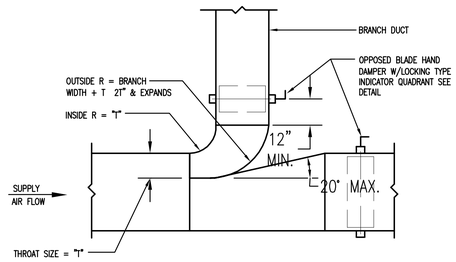

2 **RECTANGULAR LOW PRESS. DUCT BRANCH W/THROAT AND VOLUME DAMPER**
N.T.S.

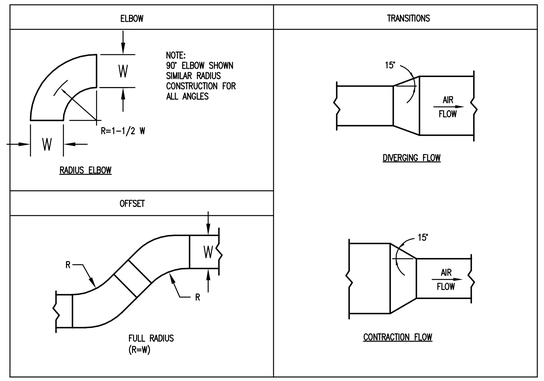

3 **RECTANGULAR OR ROUND TRANSITIONS, OFFSETS AND ELBOWS**
N.T.S.

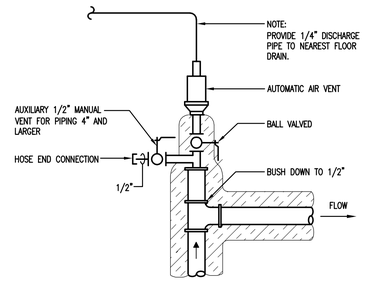

4 **AUTOMATIC AIR VENT**
N.T.S.

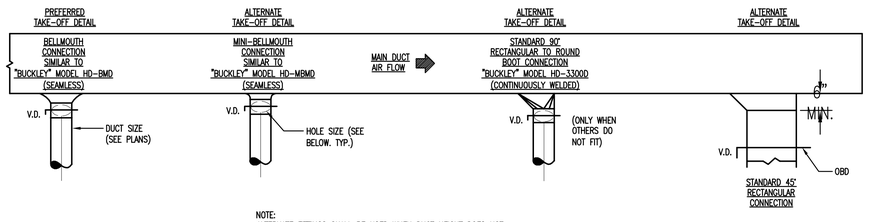

NOTE:
ALTERNATE FITTINGS SHALL BE USED WHEN DUCT HEIGHT DOES NOT PERMIT THE USE OF THE PREFERRED FULL SIZE BELLMOUTH. SUBMIT FITTINGS FOR REVIEW BY ENGINEER PRIOR TO INSTALLATION

THIS DETAIL APPLIES TO SINGLE TAKEOFFS TO DIFFUSER AS WELL AS BRANCH TAKEOFFS. IT ALSO APPLIES TO TAKEOFFS IN THE HORIZONTAL AS WELL AS VERTICAL DIRECTION.

5 **DUCT TAKEOFFS**
N.T.S.

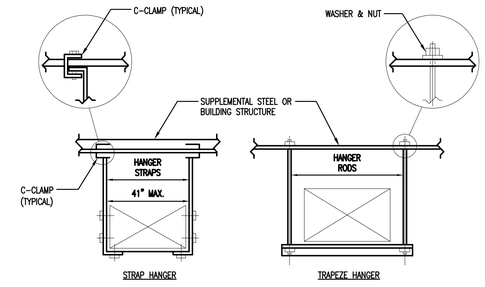

NOTE:
1. NO POP RIVETS ALLOWED, USE SELF-TAPPING SHEETMETAL SCREWS ONLY.

6 **DUCT HANGER**
N.T.S.

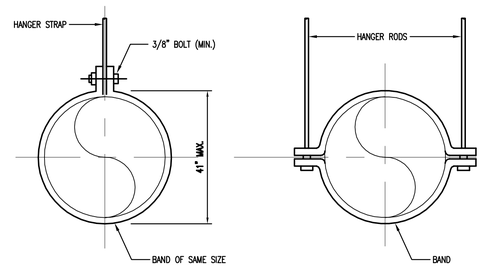

7 **ROUND DUCT HANGERS**
N.T.S.

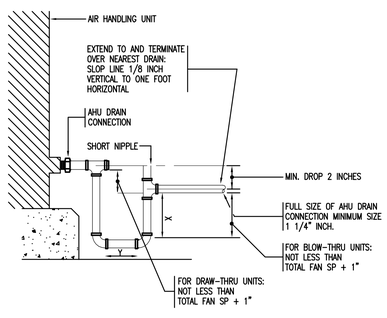

NOTE: 2X+Y SHALL EQUAL TOTAL FAN SP+2" (MINIMUM)

8 **TYPICAL AIR HANDLING UNIT CASING DRAIN**
N.T.S.

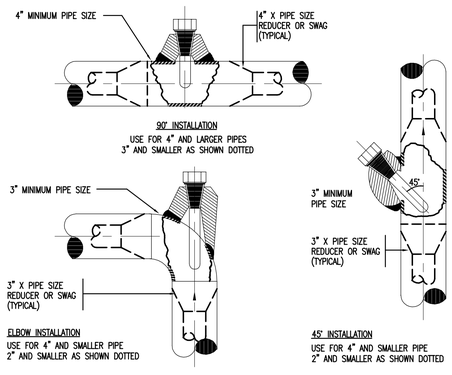

9 **TYPICAL THERMOWELL INSTALLATION**
N.T.S.

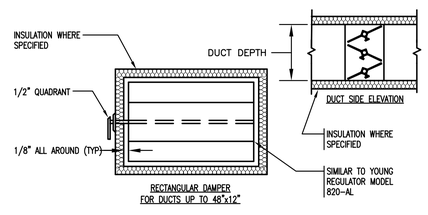

NOTES:
1. FOR RECTANGULAR DUCTS OVER 12" HIGH USE HIGH PRESSURE OBD.
2. ALL BRANCH DUCTS (SUPPLY, RETURN & EXHAUST) SHALL HAVE VOLUME DAMPERS, INCLUDING RUNOUTS TO DIFFUSERS.
3. ALL QUADRANT OPERATORS SHALL BE EXTENDED TO OUTSIDE OF INSULATION.
4. FOR DUCT UNDER 12" IN HEIGHT NOT EXCEEDING 2" PRESSURE CLASS.

10 **VOLUME DAMPER**
N.T.S.

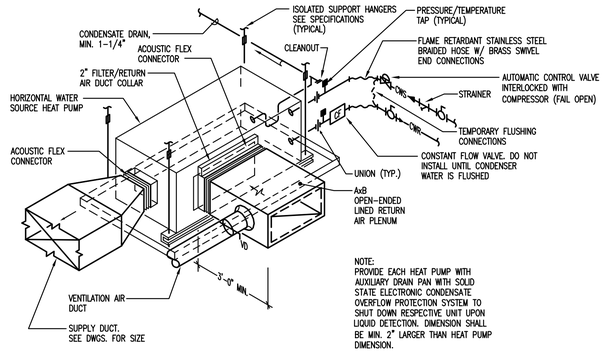

NOTE:
PROVIDE EACH HEAT PUMP WITH AUXILIARY DRAIN PAN WITH SOLID STATE ELECTRONIC CONDENSATE OVERFLOW PROTECTION SYSTEM TO SHUT DOWN RESPECTIVE UNIT UPON LIQUID DETECTION. DIMENSION SHALL BE MIN. 2" LARGER THAN HEAT PUMP DIMENSION.

11 **WATER SOURCE HEAT PUMP DETAIL**
N.T.S.

J:\Jobs\323202.MEP\HVAC\H-401-402-403.dwg Sep 17, 2014 - 10:24pm khs

Washington Village Phase 1

20 Day Street Building B

Norwalk, CT

Trinity Washington Village Limited Partnership
&
the Norwalk Housing Authority

E-ICON ARCHITECTURE
101 SUMMER ST BOSTON MA 02110
617-451-3333 www.iconarch.com

CONSULTANT

CENTEK engineering
Centered on Solutions SM
www.CentekEng.com
(203) 488-0580
(203) 488-8587 Fax
63-2 North Branford Road, Branford, CT 06405

STAMP



KEYPLAN

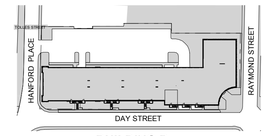

BUILDING B

N

MARK	DATE	DESCRIPTION
	09-15-2014	PERMIT/ PRICING
	06-13-2014	PRICING
	11-18-2013	40% CHFA
	09-19-2013	CAM/ SPECIAL PERMIT

PROJECT NO.: 21222/CENTEK #13232.02
DRAWN BY: KHS
CHECKED BY: FRC

SHEET TITLE

HVAC DETAILS

H-402

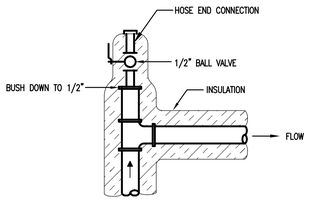

1 **MANUAL AIR VENT**
N.T.S.

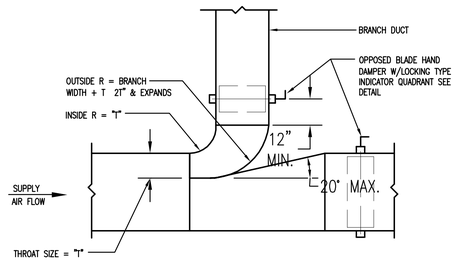

2 **RECTANGULAR LOW PRESS. DUCT BRANCH W/THROAT AND VOLUME DAMPER**
N.T.S.

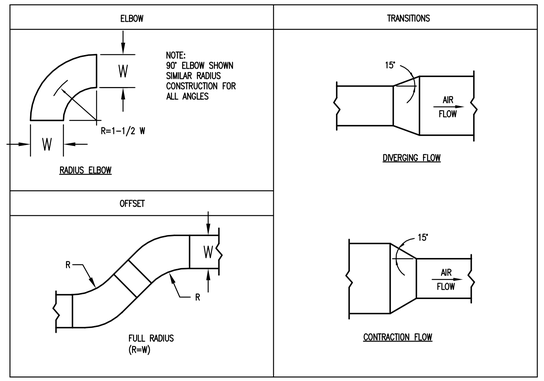

3 **RECTANGULAR OR ROUND TRANSITIONS, OFFSETS AND ELBOWS**
N.T.S.

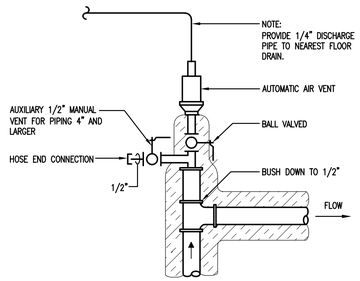

4 **AUTOMATIC AIR VENT**
N.T.S.

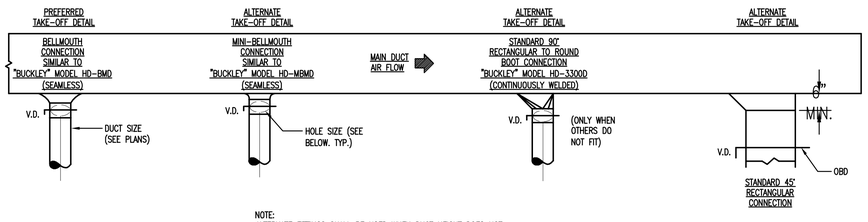

NOTE:
ALTERNATE FITTINGS SHALL BE USED WHEN DUCT HEIGHT DOES NOT PERMIT THE USE OF THE PREFERRED FULL SIZE BELLMOUTH. SUBMIT FITTINGS FOR REVIEW BY ENGINEER PRIOR TO INSTALLATION

THIS DETAIL APPLIES TO SINGLE TAKEOFFS TO DIFFUSER AS WELL AS BRANCH TAKEOFFS. IT ALSO APPLIES TO TAKEOFFS IN THE HORIZONTAL AS WELL AS VERTICAL DIRECTION.

5 **DUCT TAKEOFFS**
N.T.S.

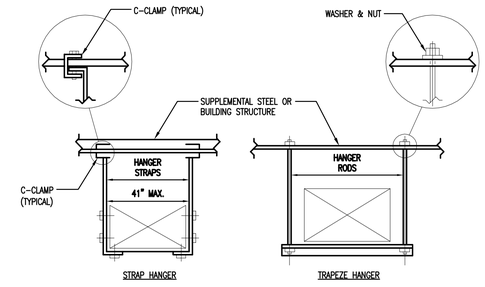

NOTE:
1. NO POP RIVETS ALLOWED, USE SELF-TAPPING SHEETMETAL SCREWS ONLY.

6 **DUCT HANGER**
N.T.S.

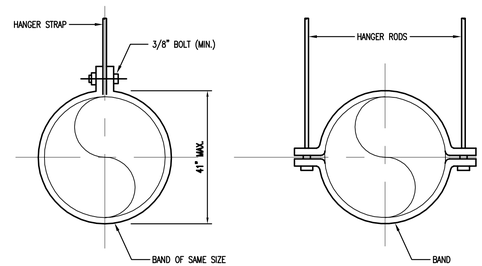

7 **ROUND DUCT HANGERS**
N.T.S.

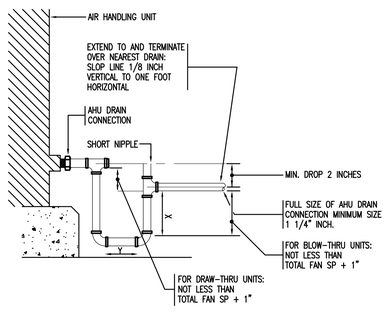

NOTE: 2X+Y SHALL EQUAL TOTAL FAN SP+2" (MINIMUM)

8 **TYPICAL AIR HANDLING UNIT CASING DRAIN**
N.T.S.

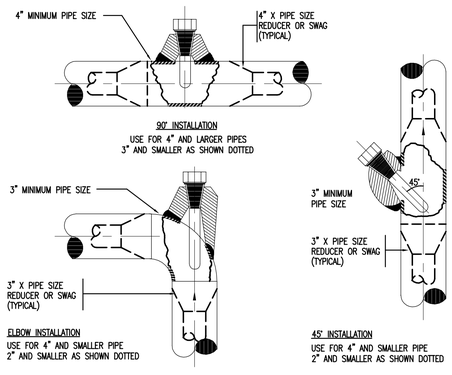

9 **TYPICAL THERMOWELL INSTALLATION**
N.T.S.

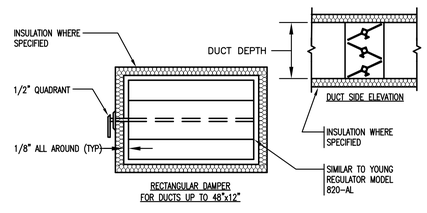

NOTES:
1. FOR RECTANGULAR DUCTS OVER 12" HIGH USE HIGH PRESSURE OBD.
2. ALL BRANCH DUCTS (SUPPLY, RETURN & EXHAUST) SHALL HAVE VOLUME DAMPERS, INCLUDING RUNOUTS TO DIFFUSERS.
3. ALL QUADRANT OPERATORS SHALL BE EXTENDED TO OUTSIDE OF INSULATION.
4. FOR DUCT UNDER 12" IN HEIGHT NOT EXCEEDING 2" PRESSURE CLASS.

10 **VOLUME DAMPER**
N.T.S.

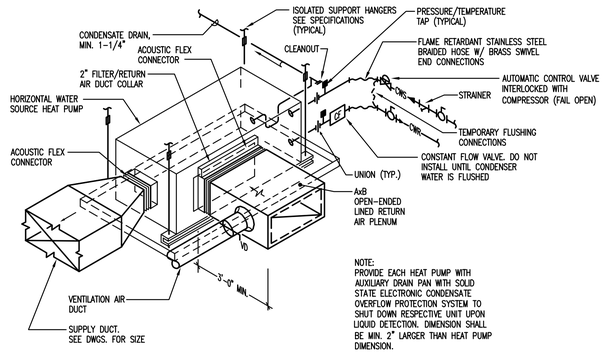

NOTE:
PROVIDE EACH HEAT PUMP WITH AUXILIARY DRAIN PAN WITH SOLID STATE ELECTRONIC CONDENSATE OVERFLOW PROTECTION SYSTEM TO SHUT DOWN RESPECTIVE UNIT UPON LIQUID DETECTION. DIMENSION SHALL BE MIN. 2" LARGER THAN HEAT PUMP DIMENSION.

11 **WATER SOURCE HEAT PUMP DETAIL**
N.T.S.

Washington Village Phase 1

20 Day Street Building B

Norwalk, CT

Trinity Washington Village Limited Partnership
&
the Norwalk Housing Authority

E-ICON ARCHITECTURE
101 SUMMER ST BOSTON MA 02110
617-451-3333 www.iconarch.com

CONSULTANT
CENTEK engineering
Centered on Solutions SM
www.CentekEng.com
(203) 488-0580
(203) 488-8587 Fax
63-2 North Branford Road, Branford, CT 06405

STAMP



KEYPLAN

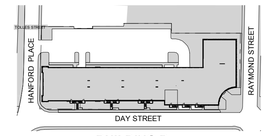

BUILDING B

N

MARK	DATE	DESCRIPTION
	09-15-2014	PERMIT/ PRICING
	06-13-2014	PRICING
	11-18-2013	40% CHFA
	09-19-2013	CAM/ SPECIAL PERMIT

PROJECT NO.: 21222/CENTEK #13232.02
DRAWN BY: KHS
CHECKED BY: FRC

SHEET TITLE

HVAC DETAILS

H-403

J:\Jobs\13232.02 MF\HVAC\H-401-402-403.dwg Sep 17, 2014 - 10:25pm khs

SPRINKLER SCHEDULE

SYMBOL	TYPE	MODEL	K-FACTOR	FINISH AND TEMPERATURE	LOCATION	NOTES
A	CONCEALED PENDENT QUICK RESPONSE	RELIABLE F1FR RECESSED PENDENT WHITE POLYESTER COATED SPRINKLER HEAD W/WHITE PAINTED ESCUTCHEON	5.6	155°F	ALL AREAS UNLESS NOTED OTHERWISE	
B	UPRIGHT QUICK RESPONSE	RELIABLE F1FR	5.6	155°F	WHERE NOTED	PROVIDE HIGH TEMPERATURE SPRINKLER WITH SPRINKLER CAGE IN MECHANICAL ROOMS, BOILER ROOMS.
C	DRY RECESSED HORIZONTAL SIDEWALL QUICK RESPONSE	RELIABLE F1FR	5.6	155°F	ELEVATOR PITS, EXTERIOR BALCONIES, GROUND FLOOR PATIOS	
D	PENDENT QUICK RESPONSE	RELIABLE F1FR	5.6	155°F	TOP OF ELEVATOR SHAFTS	
E	DRY PENDENT QUICK RESPONSE	RELIABLE F1FR	5.6	155°F	PARKING GARAGE	
F	RESIDENTIAL CONCEALED PENDENT	VIKING FREEDOM RESIDENTIAL CONCEALED PENDENT SPRINKLER W/WHITE COVER PLATE	4.9	165°F SPR 135°F COVER	APARTMENTS	

FIRE PROTECTION LEGEND

SYMBOL	ABBR.	DESCRIPTION
SPR	SPR	SPRINKLER PIPING
FP	FP	COMBINED FIRE PROTECTION PIPING
DS	DS	DRY SPRINKLER SYSTEM
		NEW SPRINKLER HEAD
		PIPE UP THRU SLAB OF FLOOR ABOVE
		PIPE DOWN THRU FLOOR SHOWN
		PIPE DROP
		PIPE RISE
	FCVA	FLOOR CONTROL VALVE ASSEMBLY
	ACV	WET ALARM CHECK VALVE
	DPV	DRY PIPE CHECK VALVE
	DCVA	DOUBLE CHECK VALVE ASSEMBLY
	FDC	FORGED STORZ FIRE DEPARTMENT CONNECTION
		ROOF MANIFOLD
	FVC	FIRE VALVE CABINET
		CONTROL VALVE WITH TAMPER SWITCH
		CHECK VALVE
		WATER GONG
		ELECTRIC ALARM BELL
	FDV	FIRE DEPARTMENT VALVE

FLOW TEST DATA

STATIC : ..... 78 PSI
RESIDUAL : ..... 60 PSI
FLOW : ..... 950 GPM
DATE : 5/5/2009

SOURCE OF INFO : ..... SNEW
LOCATION : ..... DAY ST & RICHMOND ST

FIRE PROTECTION GENERAL NOTES

1. DRAWINGS ARE DIAGRAMMATIC AND SHOW THE GENERAL INTENT OF WORK. SEE DETAILS, RISERS AND SPECIFICATIONS FOR ADDITIONAL INFORMATION.
2. COORDINATE WORK WITH PHASING SCHEDULE. ALL WORK TO OCCUR AT OWNER'S CONVENIENCE. NOTIFY OWNER WELL IN ADVANCE OF BEGINNING ANY PHASE OF WORK.
3. SPRINKLER HEADS IN AREAS SUBJECT TO EXCESSIVE TEMPERATURES SUCH AS THE AREA IMMEDIATELY AROUND HEATING EQUIPMENT AND OTHER HEAT PRODUCING EQUIPMENT SHALL BE OF THE HIGH TEMPERATURE TYPE.
4. IN AREAS WITHOUT FINISHED CEILINGS UPRIGHT SPRINKLERS SHALL BE USED UNLESS OTHERWISE NOTED.
5. IN AREAS WITH FINISHED CEILINGS CONCEALED PENDENT SPRINKLERS SHALL BE USED UNLESS OTHERWISE NOTED. FLEX HEADS SHALL NOT BE USED.
6. THE FIRE PROTECTION CONTRACTOR SHALL REVIEW THE ARCHITECTURAL REFLECTED CEILING PLANS AS PART OF THIS CONTRACT FOR ADDITIONAL INFORMATION SUCH AS CEILING HEIGHTS, TYPES, SOFFITS AND/OR OTHER DEVICE LOCATIONS.
7. THE FIRE PROTECTION CONTRACTOR SHALL REVIEW THE ELECTRICAL DIVISION DRAWINGS AND COORDINATE THE FIRE PROTECTION WORK WITH LOCATIONS OF LIGHTS, AND CEILING MOUNTED DEVICES WHICH MAY INTERFERE WITH SPRINKLER HEAD LOCATIONS OR SPRAY PATTERNS.
8. THE FIRE PROTECTION CONTRACTOR SHALL REVIEW THE HVAC DIVISION DRAWINGS AND COORDINATE THE FIRE PROTECTION WORK WITH LOCATIONS OF CEILING MOUNTED DEVICES SUCH AS DIFFUSERS, GRILLES, REGISTERS, AND ALSO THE LOCATIONS OF HEAT PRODUCING EQUIPMENT AND DUCTWORK REQUIRING SPRINKLER PROTECTION BELOW IT.
9. SPRINKLER CONTRACTOR SHALL SUBMIT SHOP DRAWINGS AND HYDRAULIC CALCULATIONS TO A/E OF RECORD. CONTRACTOR SHALL PERFORM HIS OWN UP-TO-DATE FLOW TEST TO HYDRAULICALLY CALCULATE THIS PROJECT.
10. IT IS THE INTENT OF THIS PROJECT TO CONCEAL ALL PIPING WHEREVER POSSIBLE.
11. ALL EXPOSED PIPING SHALL BE PRIME AND 2-COAT FINISH PAINTED. COLOR FOR EACH SPACE WILL BE SELECTED BY THE ARCHITECT.
12. THE FIRE PROTECTION CONTRACTOR SHALL DESIGN AND INSTALL ALL FIRE PROTECTION SYSTEMS IN ACCORDANCE WITH NFPA 13 – 2002.
13. THE FIRE PROTECTION CONTRACTOR SHALL VERIFY WITH THE LOCAL FIRE DEPARTMENT AND ARCHITECT FOR FINAL LOCATIONS OF ALL FIRE DEPARTMENT CONNECTIONS FOR EACH BUILDING PRIOR TO INSTALLATION.
14. THE FIRE PROTECTION CONTRACTOR SHALL COORDINATE ALL SPRINKLER PIPING WITH THE STRUCTURAL LAYOUT.

SPRINKLER DESIGN CRITERIA

DESIGN AND INSTALLATION OF FIRE PROTECTION SYSTEMS SHALL COMPLY WITH NFPA 13 – 2002.

APARTMENTS, OFFICES, ETC.:

OCCUPANCY : ..... LIGHT HAZARD
DENSITY : ..... 0.10 GPM/SQ. FT.
DESIGN AREA : ..... 1,500 SQ. FT
MAX. COVERAGE PER SPRINKLER : ..... 225 SQ. FT.
MAX. SPRINKLER SPACING : ..... 15 FEET
MAX. DISTANCE BETWEEN SPRINKLER AND WALL : ..... 1/2 ALLOWABLE DISTANCE BETWEEN SPRINKLERS
TOTAL HOSE STREAM ALLOWANCE (INSIDE & OUTSIDE) : ..... 100 GPM

PARKING GARAGE:

OCCUPANCY : ..... ORDINARY HAZARD GROUP 1
DENSITY : ..... 0.15 GPM/SQ. FT.
DESIGN AREA : ..... 1,950 SQ. FT
MAX. COVERAGE PER SPRINKLER : ..... 130 SQ. FT.
MAX. SPRINKLER SPACING : ..... 15 FEET
MAX. DISTANCE BETWEEN SPRINKLER AND WALL : ..... 1/2 ALLOWABLE DISTANCE BETWEEN SPRINKLERS
TOTAL HOSE STREAM ALLOWANCE (INSIDE & OUTSIDE) : ..... 250 GPM

MECHANICAL SPACES, ETC.:

OCCUPANCY : ..... ORDINARY HAZARD GROUP 1
DENSITY : ..... 0.15 GPM/SQ. FT.
DESIGN AREA : ..... 1,500 SQ. FT
MAX. COVERAGE PER SPRINKLER : ..... 130 SQ. FT.
MAX. SPRINKLER SPACING : ..... 15 FEET
MAX. DISTANCE BETWEEN SPRINKLER AND WALL : ..... 1/2 ALLOWABLE DISTANCE BETWEEN SPRINKLERS
TOTAL HOSE STREAM ALLOWANCE (INSIDE & OUTSIDE) : ..... 250 GPM

Washington Village Phase 1

20 Day Street Building B

Norwalk, CT

Trinity Washington Village Limited Partnership
&
the Norwalk Housing Authority

E-ICON ARCHITECTURE
101 SUMMER ST BOSTON MA 02110
617-451-3333 www.iconarch.com

CONSULTANT
CENTEK engineering
Centered on Solutions SM
www.CentekEng.com
(203) 488-0580
(203) 488-8587 Fax
63-2 North Branford Road, Branford, CT 06405

STAMP

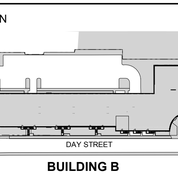

KEYPLAN

BUILDING B

N

MARK	DATE	DESCRIPTION
	09-15-2014	PERMIT/ PRICING
	06-13-2014	PRICING
	11-18-2013	40% CHFA
	09-19-2013	CAM/ SPECIAL PERMIT

PROJECT NO.: 21222/CENTEK #13232.02
DRAWN BY: KNL
CHECKED BY: FRC

SHEET TITLE

FIRE PROTECTION NOTES, SCHEDULES AND LEGENDS

FP-000

J:\Jobs\1323202.ME\FPRO\FP-000.dwg Sep 17, 2014 - 10:02pm knl

FIRE PROTECTION WORK NOTES

ALL SPRINKLERS SHALL BE TYPE 'E' UNLESS NOTED OTHERWISE.

ALL SPRINKLER MAIN AND BRANCH PIPE SIZES SHALL BE BASED UPON HYDRAULIC CALCULATIONS PERFORMED BY THE FIRE PROTECTION CONTRACTOR.

GENERAL NOTE:

1. COORDINATE ALL WORK WITH ALL OTHER TRADES. REFER TO OTHER TRADE'S DRAWINGS FOR ADDITIONAL INFORMATION.

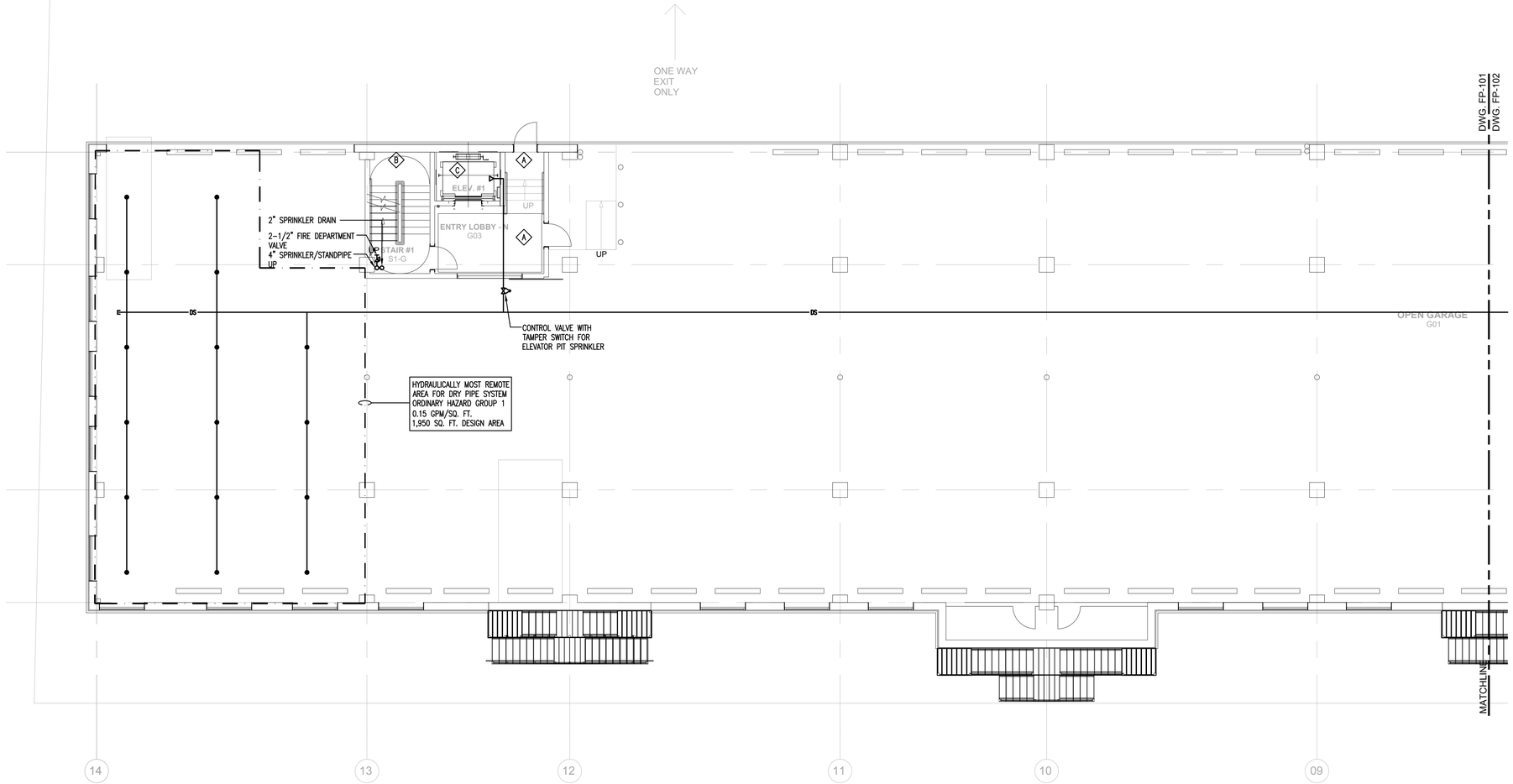

1 **GROUND LEVEL PLAN (NORTH WING) - FIRE PROTECTION**
SCALE: 1/8"=1'-0"

PROJECT NORTH

Washington Village Phase 1

20 Day Street Building B

Norwalk, CT

Trinity Washington Village Limited Partnership
&
the Norwalk Housing Authority

E-ICON ARCHITECTURE
101 SUMMER ST BOSTON MA 02110
617-451-3333 www.iconarch.com

CONSULTANT
CENTEK engineering
Centered on Solutions ℠
www.CentekEng.com
(203) 488-0580
(203) 488-8587 Fax
63-2 North Branford Road, Branford, CT 06405

STAMP

KEYPLAN

MARK	DATE	DESCRIPTION
	09-15-2014	PERMIT/ PRICING
	06-13-2014	PRICING
	11-18-2013	40% CHFA
	09-19-2013	CAM/ SPECIAL PERMIT

PROJECT NO.: 21222/CENTEK #13232.02
DRAWN BY: KNL
CHECKED BY: FRC

SHEET TITLE

BUILDING B GROUND LEVEL PLAN (NORTH WING) - FIRE PROTECTION

FP-101

J:\Jobs\13232.02 ME\FPROT\FP-101 & FP-102.dwg Sep 17, 2014 - 10:03pm knl

FIRE PROTECTION WORK NOTES

ALL SPRINKLERS SHALL BE TYPE 'E' UNLESS NOTED OTHERWISE.

ALL SPRINKLER MAIN AND BRANCH PIPE SIZES SHALL BE BASED UPON HYDRAULIC CALCULATIONS PERFORMED BY THE FIRE PROTECTION CONTRACTOR.

GENERAL NOTE:

1. COORDINATE ALL WORK WITH ALL OTHER TRADES. REFER TO OTHER TRADE'S DRAWINGS FOR ADDITIONAL INFORMATION.

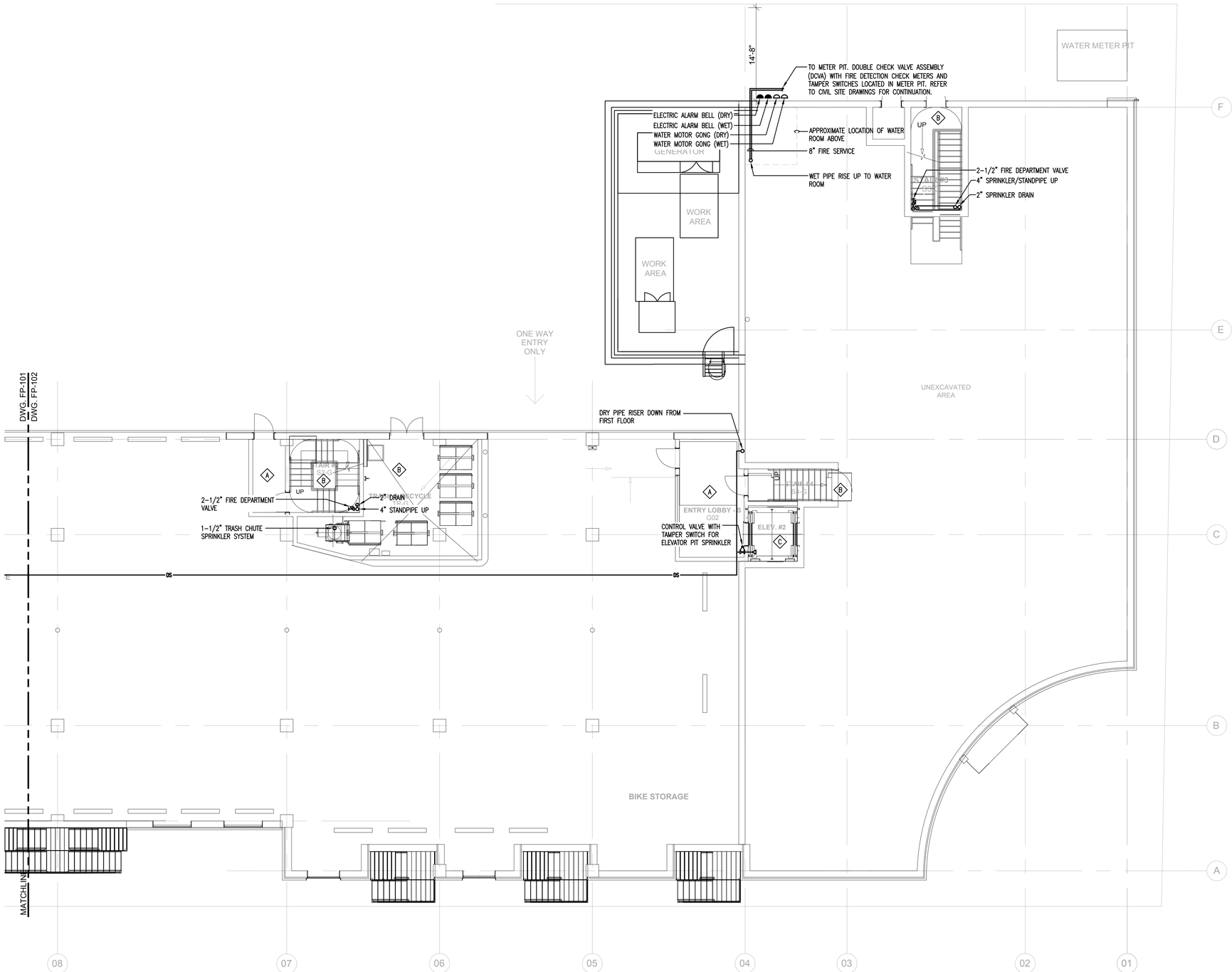

1 **GROUND LEVEL PLAN (SOUTH WING) - FIRE PROTECTION**
SCALE: 1/8"=1'-0"

PROJECT NORTH

Washington Village Phase 1

20 Day Street Building B

Norwalk, CT

Trinity Washington Village Limited Partnership
&
the Norwalk Housing Authority

E-ICON ARCHITECTURE
101 SUMMER ST BOSTON MA 02110
617-451-3333 www.iconarch.com

CONSULTANT
CENTEK engineering
Centered on Solutions ℠
www.CentekEng.com
(203) 488-0580
(203) 488-8587 Fax
63-2 North Branford Road, Branford, CT 06405

STAMP



KEYPLAN

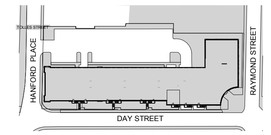

BUILDING B

N 0 4' 8' 16'

MARK	DATE	DESCRIPTION
	09-15-2014	PERMIT/ PRICING
	06-13-2014	PRICING
	11-18-2013	40% CHFA
	09-19-2013	CAM/ SPECIAL PERMIT

PROJECT NO.: 21222/CENTEK #13232.02
DRAWN BY: KNL
CHECKED BY: FRC

SHEET TITLE

BUILDING B GROUND LEVEL PLAN (SOUTH WING) - FIRE PROTECTION

FP-102

J:\Jobs\13232.02\MEVFPRO\FP-101 & FP-102.dwg Sep 17, 2014 - 10:03pm knl

FIRE PROTECTION WORK NOTES

ALL SPRINKLERS SHALL BE TYPE "F" UNLESS NOTED OTHERWISE.

ALL SPRINKLER MAIN AND BRANCH PIPE SIZES SHALL BE BASED UPON HYDRAULIC CALCULATIONS PERFORMED BY THE FIRE PROTECTION CONTRACTOR.

PROVIDE SPRINKLER PROTECTION IN ALL CONCEALED SPACES IN ACCORDANCE WITH NFPA 13 – 2002.

GENERAL NOTE:

1. COORDINATE ALL WORK WITH ALL OTHER TRADES. REFER TO OTHER TRADE'S DRAWINGS FOR ADDITIONAL INFORMATION.

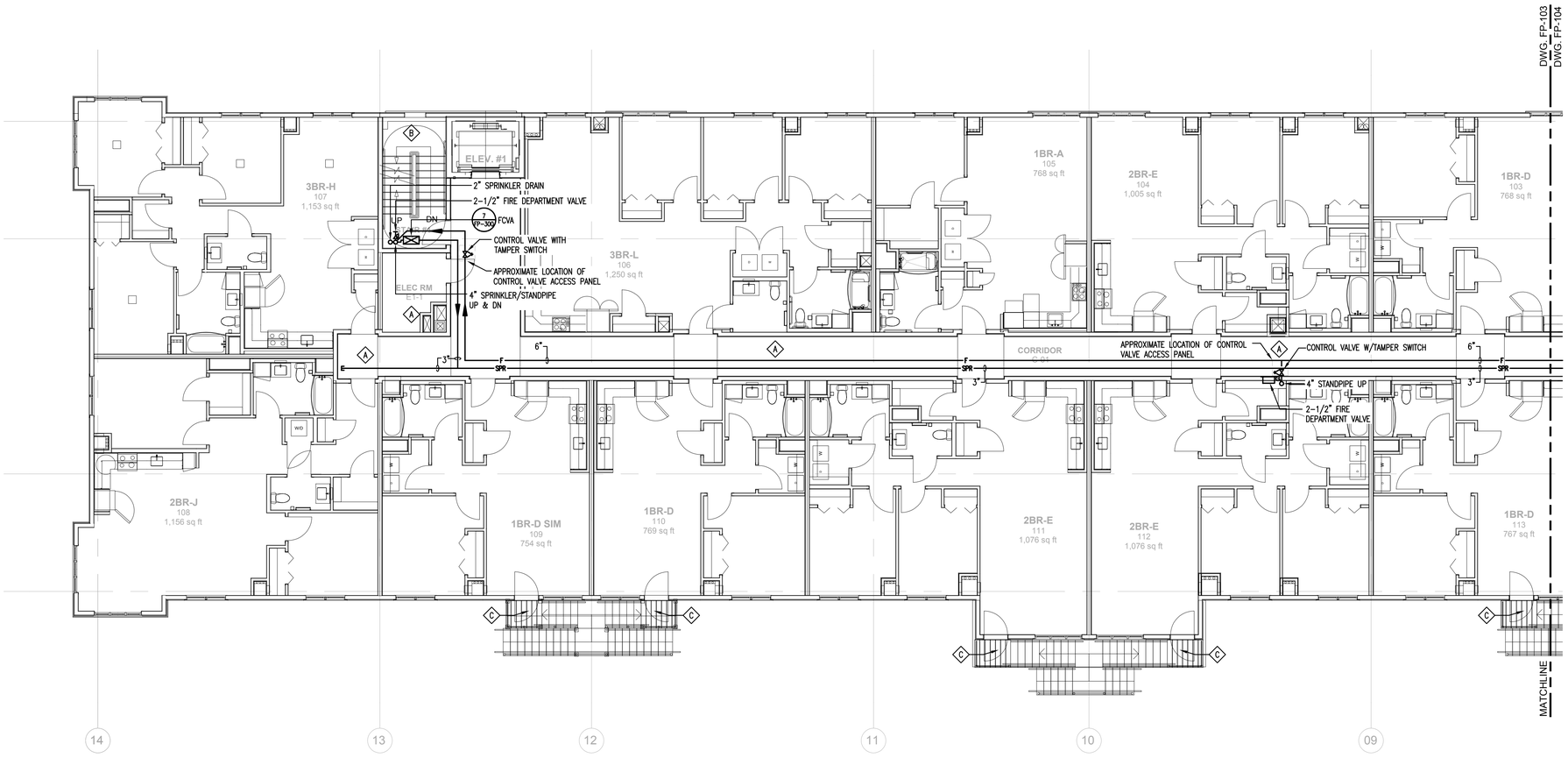

1 **FIRST FLOOR PLAN (NORTH WING) - FIRE PROTECTION**
SCALE: 1/8"=1'-0"

PROJECT NORTH

Washington Village Phase 1

20 Day Street Building B

Norwalk, CT

Trinity Washington Village Limited Partnership
&
the Norwalk Housing Authority

E-ICON ARCHITECTURE
101 SUMMER ST BOSTON MA 02110
617-451-3333 www.iconarch.com

CONSULTANT
CENTEK engineering
Centered on Solutions SM
www.CentekEng.com
(203) 488-0580
(203) 488-8587 Fax
63-2 North Branford Road, Branford, CT 06405

STAMP

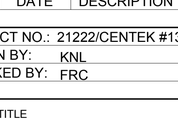

KEYPLAN

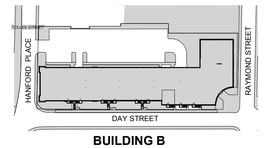

MARK	DATE	DESCRIPTION
	09-15-2014	PERMIT/ PRICING
	06-13-2014	PRICING
	11-18-2013	40% CHFA
	09-19-2013	CAM/ SPECIAL PERMIT

PROJECT NO.: 21222/CENTEK #13232.02
DRAWN BY: KNL
CHECKED BY: FRC

SHEET TITLE

BUILDING B
FIRST FLOOR
PLAN (NORTH WING) -
FIRE PROTECTION

FP-103

J:\Jobs\1323202.ME\FPRO\FP-103 & FP-104.dwg Sep 17, 2014 - 10:04pm knl

FIRE PROTECTION WORK NOTES

ALL SPRINKLERS SHALL BE TYPE 'F' UNLESS NOTED OTHERWISE.

ALL SPRINKLER MAIN AND BRANCH PIPE SIZES SHALL BE BASED UPON HYDRAULIC CALCULATIONS PERFORMED BY THE FIRE PROTECTION CONTRACTOR.

PROVIDE SPRINKLER PROTECTION IN ALL CONCEALED SPACES IN ACCORDANCE WITH NFPA 13 – 2002.

GENERAL NOTE:

1. COORDINATE ALL WORK WITH ALL OTHER TRADES. REFER TO OTHER TRADE'S DRAWINGS FOR ADDITIONAL INFORMATION.

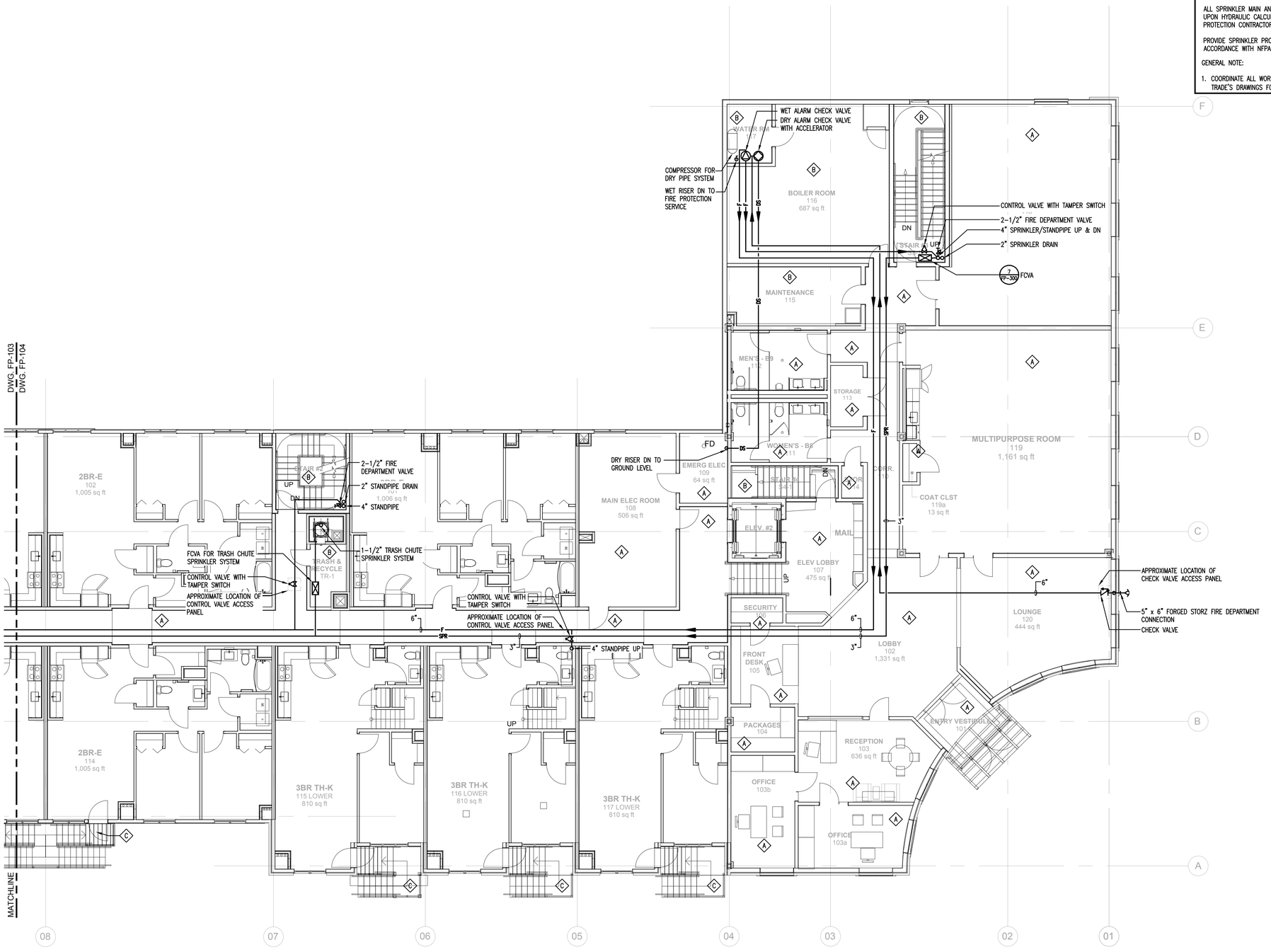

1 **FIRST FLOOR PLAN (SOUTH WING) - FIRE PROTECTION**
SCALE: 1/8"=1'-0"

PROJECT NORTH

Washington Village Phase 1

20 Day Street Building B

Norwalk, CT

Trinity Washington Village Limited Partnership
&
the Norwalk Housing Authority

E-ICON ARCHITECTURE
101 SUMMER ST BOSTON MA 02110
617-451-3333 www.iconarch.com

CONSULTANT
CENTEK engineering
Centered on Solutions SM
www.CentekEng.com
(203) 488-0580
(203) 488-8587 Fax
63-2 North Branford Road, Branford, CT 06405

STAMP



KEYPLAN

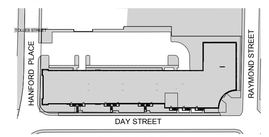

BUILDING B

N 0 4' 8' 16'

MARK	DATE	DESCRIPTION
	09-15-2014	PERMIT/ PRICING
	06-13-2014	PRICING
	11-18-2013	40% CHFA
	09-19-2013	CAM/ SPECIAL PERMIT

PROJECT NO.: 21222/CENTEK #13232.02
DRAWN BY: KNL
CHECKED BY: FRC

SHEET TITLE

BUILDING B
FIRST FLOOR
PLAN (SOUTH WING) -
FIRE PROTECTION

FP-104

J:\Jobs\1323202.ME\FPROJ\FP-103 & FP-104.dwg Sep 17, 2014 - 10:04pm knl

FIRE PROTECTION WORK NOTES

ALL SPRINKLERS SHALL BE TYPE 'F' UNLESS NOTED OTHERWISE.

ALL SPRINKLER MAIN AND BRANCH PIPE SIZES SHALL BE BASED UPON HYDRAULIC CALCULATIONS PERFORMED BY THE FIRE PROTECTION CONTRACTOR.

PROVIDE SPRINKLER PROTECTION IN ALL CONCEALED SPACES IN ACCORDANCE WITH NFPA 13 – 2002.

GENERAL NOTE:

1. COORDINATE ALL WORK WITH ALL OTHER TRADES. REFER TO OTHER TRADE'S DRAWINGS FOR ADDITIONAL INFORMATION.

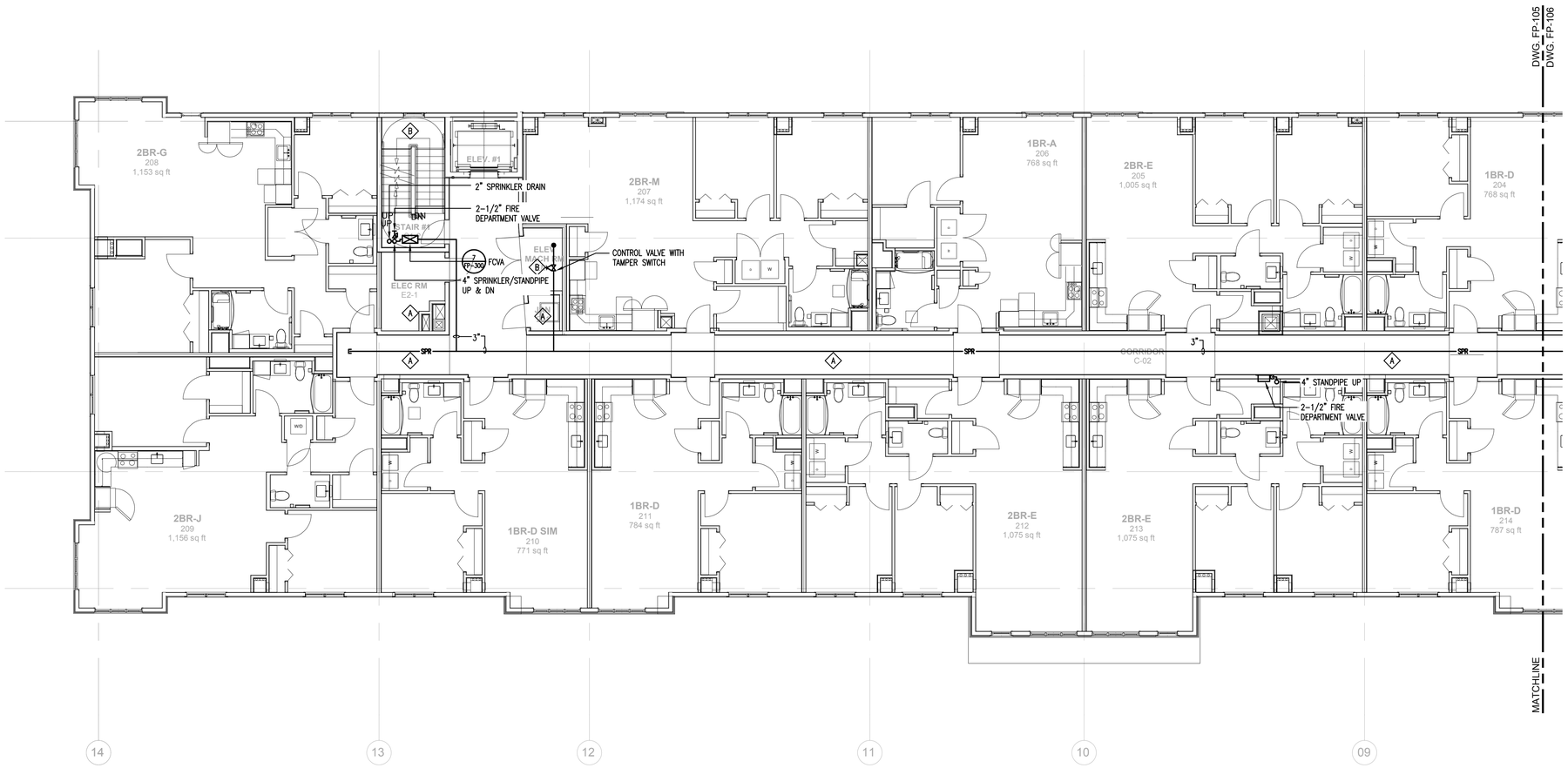

1 **SECOND FLOOR PLAN (NORTH WING) - FIRE PROTECTION**
SCALE: 1/8"=1'-0"

PROJECT NORTH

Washington Village Phase 1

20 Day Street Building B

Norwalk, CT

Trinity Washington Village Limited Partnership
&
the Norwalk Housing Authority

E-ICON ARCHITECTURE
101 SUMMER ST BOSTON MA 02110
617-451-3333 www.iconarch.com

CONSULTANT
CENTEK engineering
Centered on Solutions SM
www.CentekEng.com
(203) 488-0580
(203) 488-8587 Fax
63-2 North Branford Road, Branford, CT 06405

STAMP



KEYPLAN

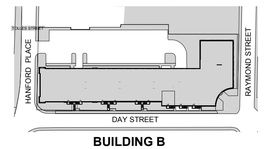

MARK	DATE	DESCRIPTION
	09-15-2014	PERMIT/ PRICING
	06-13-2014	PRICING
	11-18-2013	40% CHFA
	09-19-2013	CAM/ SPECIAL PERMIT

PROJECT NO.:	21222/CENTEK #13232.02
DRAWN BY:	KNL
CHECKED BY:	FRC

SHEET TITLE

BUILDING B
SECOND FLOOR
PLAN (NORTH WING) -
FIRE PROTECTION

FP-105

J:\Jobs\1323202.ME\FPRO\FP-105 & FP-106.dwg Sep 17, 2014 - 10:05pm knl

FIRE PROTECTION WORK NOTES

ALL SPRINKLERS SHALL BE TYPE "F" UNLESS NOTED OTHERWISE.

ALL SPRINKLER MAIN AND BRANCH PIPE SIZES SHALL BE BASED UPON HYDRAULIC CALCULATIONS PERFORMED BY THE FIRE PROTECTION CONTRACTOR.

PROVIDE SPRINKLER PROTECTION IN ALL CONCEALED SPACES IN ACCORDANCE WITH NFPA 13 – 2002.

GENERAL NOTE:

1. COORDINATE ALL WORK WITH ALL OTHER TRADES. REFER TO OTHER TRADE'S DRAWINGS FOR ADDITIONAL INFORMATION.



1 SECOND FLOOR PLAN (SOUTH WING) - FIRE PROTECTION
SCALE: 1/8"=1'-0"

PROJECT NORTH

J:\Jobs\1323202.*IE\FPRO\FP-105 & FP-106.dwg Sep 17, 2014 - 10:05pm knl

Washington Village Phase 1

20 Day Street Building B

Norwalk, CT

Trinity Washington Village Limited Partnership
&
the Norwalk Housing Authority

E-ICON ARCHITECTURE
101 SUMMER ST BOSTON MA 02110
617-451-3333 www.iconarch.com

CONSULTANT
CENTEK engineering
Centered on Solutions SM
www.CentekEng.com
(203) 488-0580
(203) 488-8587 Fax
63-2 North Branford Road, Branford, CT 06405

STAMP



KEYPLAN

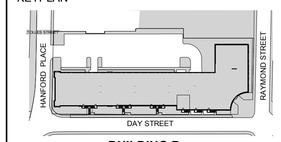

BUILDING B

N 0 4' 8' 16'

MARK	DATE	DESCRIPTION
	09-15-2014	PERMIT/ PRICING
	06-13-2014	PRICING
	11-18-2013	40% CHFA
	09-19-2013	CAM/ SPECIAL PERMIT

PROJECT NO.: 21222/CENTEK #13232.02
DRAWN BY: KNL
CHECKED BY: FRC

SHEET TITLE

BUILDING B
SECOND FLOOR
PLAN (SOUTH WING) -
FIRE PROTECTION

FP-106

FIRE PROTECTION WORK NOTES

ALL SPRINKLERS SHALL BE TYPE "F" UNLESS NOTED OTHERWISE.

ALL SPRINKLER MAIN AND BRANCH PIPE SIZES SHALL BE BASED UPON HYDRAULIC CALCULATIONS PERFORMED BY THE FIRE PROTECTION CONTRACTOR.

PROVIDE SPRINKLER PROTECTION IN ALL CONCEALED SPACES IN ACCORDANCE WITH NFPA 13 – 2002.

GENERAL NOTE:

1. COORDINATE ALL WORK WITH ALL OTHER TRADES. REFER TO OTHER TRADE'S DRAWINGS FOR ADDITIONAL INFORMATION.

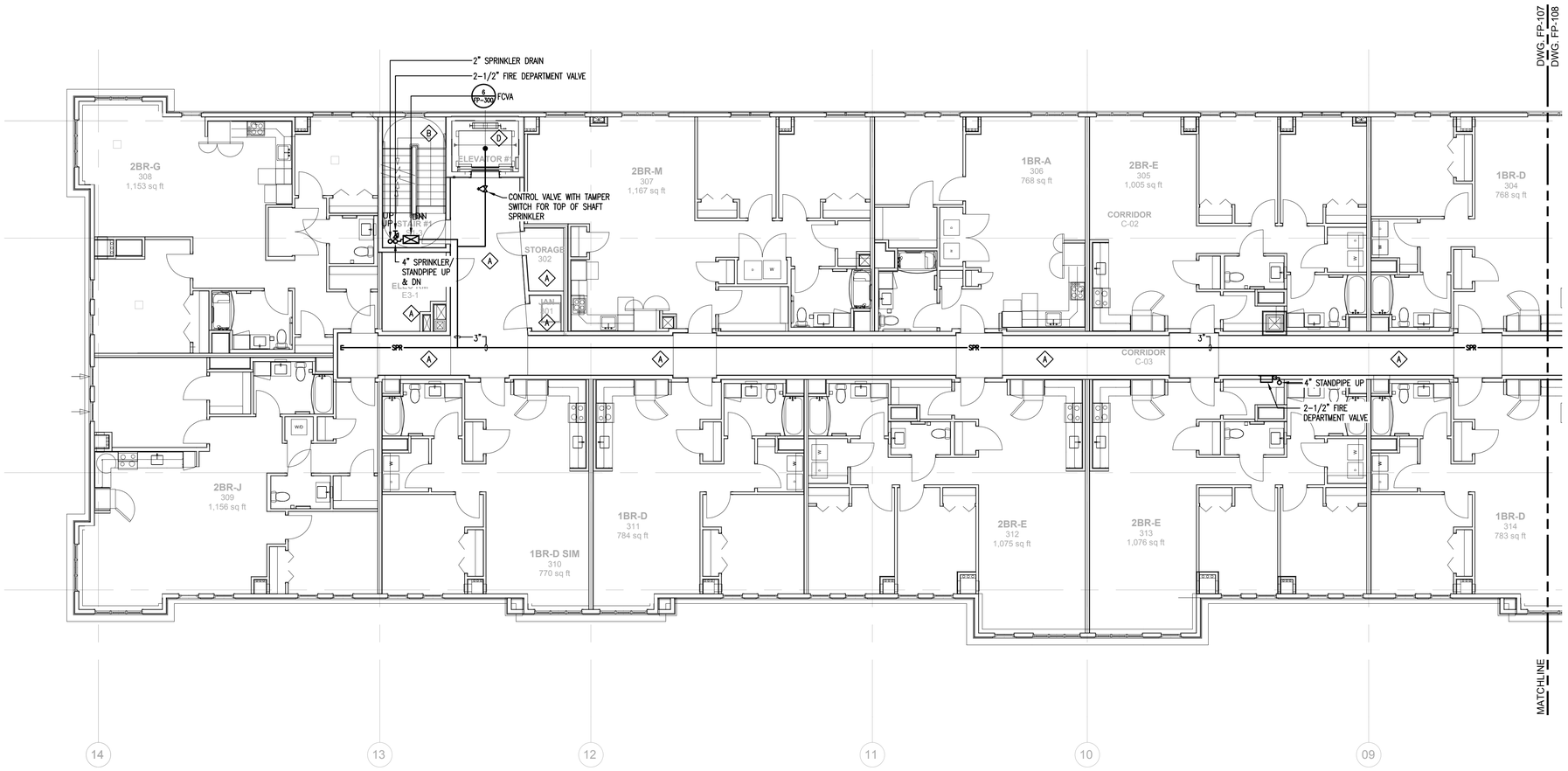

1 THIRD FLOOR PLAN (NORTH WING) - FIRE PROTECTION
SCALE: 1/8"=1'-0"

PROJECT NORTH

J:\Jobs\1323202.ME\FPRO\FP-107 & FP-108.dwg Sep 17, 2014 - 10:06pm knl

Washington Village Phase 1

20 Day Street Building B

Norwalk, CT

Trinity Washington Village Limited Partnership
&
the Norwalk Housing Authority

E-ICON ARCHITECTURE
101 SUMMER ST BOSTON MA 02110
617-451-3333 www.iconarch.com

CONSULTANT
CENTEK engineering
Centered on Solutions SM
www.CentekEng.com
(203) 488-0580
(203) 488-8587 Fax
63-2 North Branford Road, Branford, CT 06405

STAMP



KEYPLAN

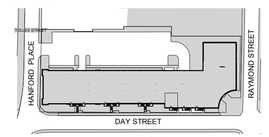

BUILDING B

N 0 4' 8' 16'

MARK	DATE	DESCRIPTION
	09-15-2014	PERMIT/ PRICING
	06-13-2014	PRICING
	11-18-2013	40% CHFA
	09-19-2013	CAM/ SPECIAL PERMIT

PROJECT NO.: 21222/CENTEK #13232.02
DRAWN BY: KNL
CHECKED BY: FRC

SHEET TITLE

THIRD FLOOR PLAN (NORTH WING) - FIRE PROTECTION

FP-107

FIRE PROTECTION WORK NOTES

ALL SPRINKLERS SHALL BE TYPE "F" UNLESS NOTED OTHERWISE.

ALL SPRINKLER MAIN AND BRANCH PIPE SIZES SHALL BE BASED UPON HYDRAULIC CALCULATIONS PERFORMED BY THE FIRE PROTECTION CONTRACTOR.

PROVIDE SPRINKLER PROTECTION IN ALL CONCEALED SPACES IN ACCORDANCE WITH NFPA 13 – 2002.

GENERAL NOTE:

1. COORDINATE ALL WORK WITH ALL OTHER TRADES. REFER TO OTHER TRADE'S DRAWINGS FOR ADDITIONAL INFORMATION.

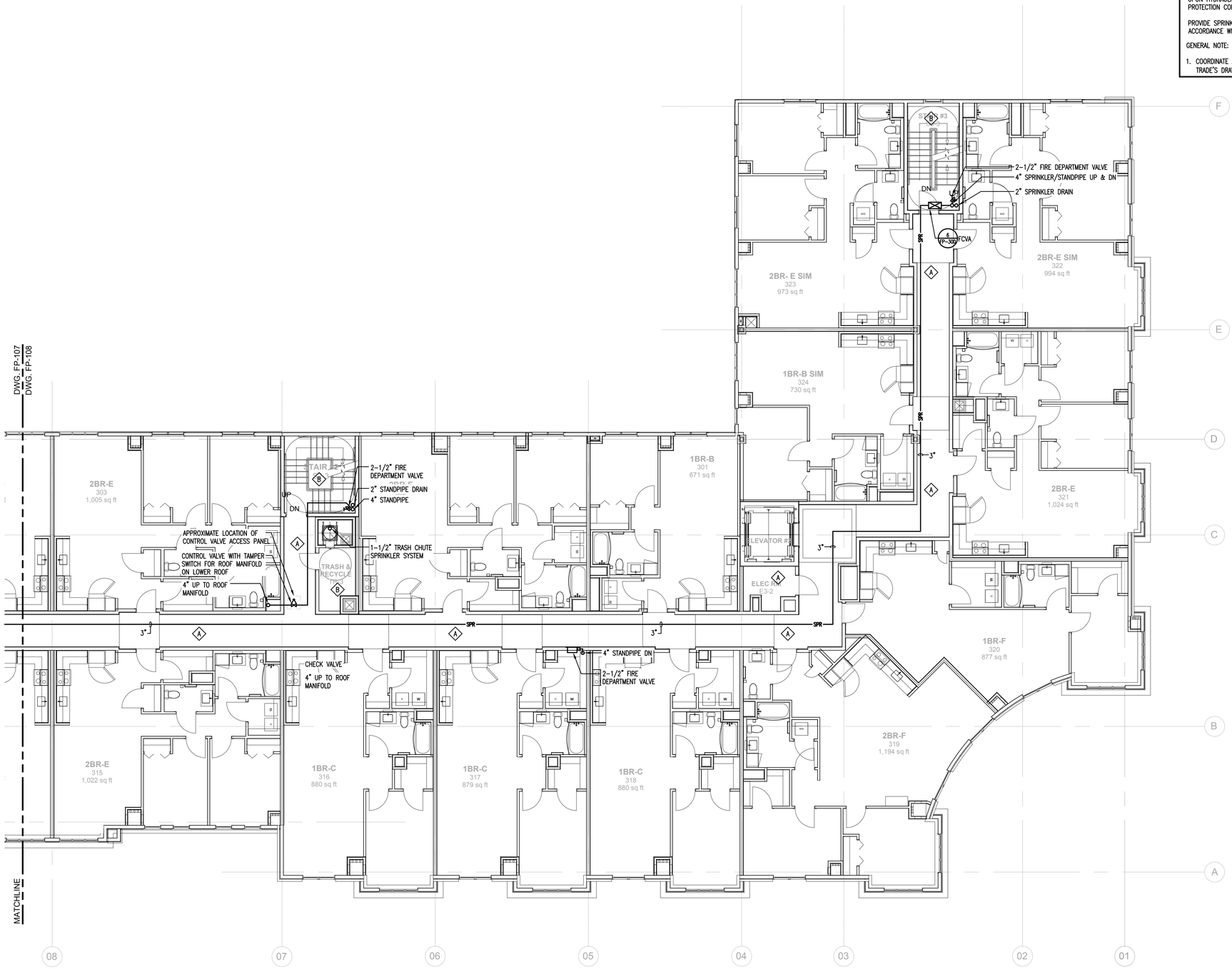

1 THIRD FLOOR PLAN (SOUTH WING) - FIRE PROTECTION
SCALE: 1/8"=1'-0"

PROJECT NORTH

J:\Jobs\1323202.ME\FPRO\FP-107 & FP-108.dwg Sep 17, 2014 - 10:06pm knl

Washington Village Phase 1

20 Day Street Building B

Norwalk, CT

Trinity Washington Village Limited Partnership
&
the Norwalk Housing Authority

E-ICON ARCHITECTURE
101 SUMMER ST BOSTON MA 02110
617-451-3333 www.iconarch.com

CONSULTANT
CENTEK engineering
Centered on Solutions ℠
www.CentekEng.com
(203) 488-0580
(203) 488-8587 Fax
63-2 North Branford Road, Branford, CT 06405

STAMP



KEYPLAN

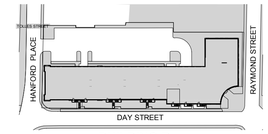

BUILDING B

N 0 4' 8' 16'

MARK	DATE	DESCRIPTION
	09-15-2014	PERMIT/ PRICING
	06-13-2014	PRICING
	11-18-2013	40% CHFA
	09-19-2013	CAM/ SPECIAL PERMIT

PROJECT NO.: 21222/CENTEK #13232.02
DRAWN BY: KNL
CHECKED BY: FRC

SHEET TITLE

THIRD FLOOR PLAN (SOUTH WING) - FIRE PROTECTION

FP-108

FIRE PROTECTION WORK NOTES

ALL SPRINKLERS SHALL BE TYPE "F" UNLESS NOTED OTHERWISE.

ALL SPRINKLER MAIN AND BRANCH PIPE SIZES SHALL BE BASED UPON HYDRAULIC CALCULATIONS PERFORMED BY THE FIRE PROTECTION CONTRACTOR.

PROVIDE SPRINKLER PROTECTION IN ALL CONCEALED SPACES IN ACCORDANCE WITH NFPA 13 – 2002.

GENERAL NOTE:

1. COORDINATE ALL WORK WITH ALL OTHER TRADES. REFER TO OTHER TRADE'S DRAWINGS FOR ADDITIONAL INFORMATION.

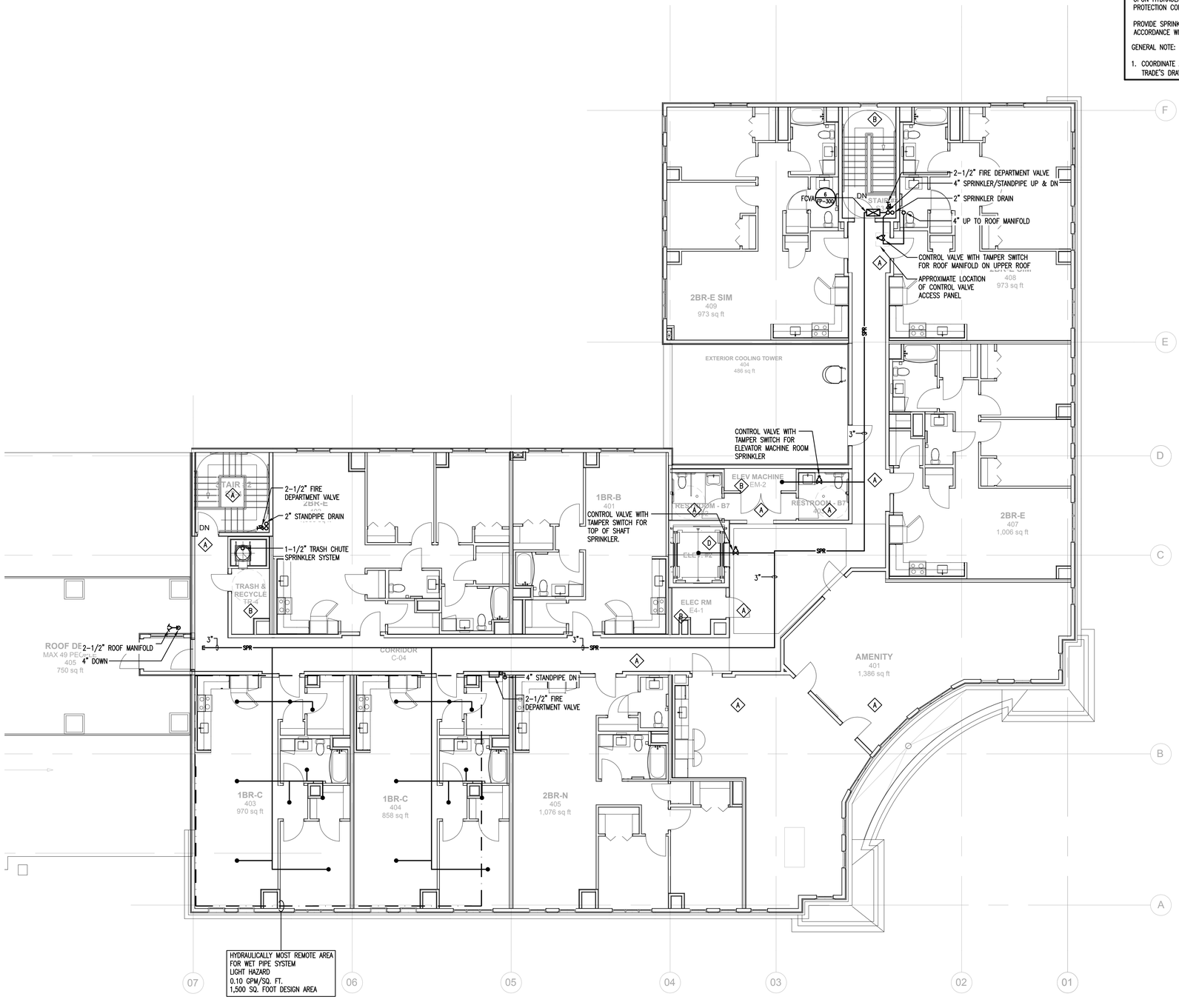

1 **FOURTH FLOOR PLAN (SOUTH WING) - FIRE PROTECTION**
SCALE: 1/8"=1'-0"

PROJECT NORTH

Washington Village Phase 1

20 Day Street Building B

Norwalk, CT

Trinity Washington Village Limited Partnership
&
the Norwalk Housing Authority

E-ICON ARCHITECTURE
101 SUMMER ST BOSTON MA 02110
617-451-3333 www.iconarch.com

CONSULTANT
CENTEK engineering
Centered on Solutions SM
www.CentekEng.com
(203) 488-0580
(203) 488-8587 Fax
63-2 North Branford Road, Branford, CT 06405

STAMP

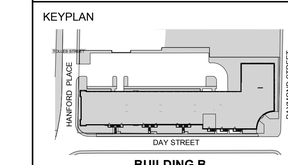

KEYPLAN

MARK	DATE	DESCRIPTION
	09-15-2014	PERMIT/ PRICING
	06-13-2014	PRICING
	11-18-2013	40% CHFA
	09-19-2013	CAM/ SPECIAL PERMIT

PROJECT NO.: 21222/CENTEK #13232.02
DRAWN BY: KNL
CHECKED BY: FRC

SHEET TITLE

BUILDING B
FOURTH FLOOR
PLAN (SOUTH WING) -
FIRE PROTECTION

FP-109

J:\Jobs\1323202.MEP\PRO\FP-109.dwg Sep 17, 2014 - 10:07pm knl

FIRE PROTECTION WORK NOTES

ALL SPRINKLER PIPE SIZES SHALL BE BASED UPON HYDRAULIC CALCULATIONS PERFORMED BY THE FIRE PROTECTION CONTRACTOR.

GENERAL NOTE:

1. COORDINATE ALL WORK WITH ALL OTHER TRADES. REFER TO OTHER TRADE'S DRAWINGS FOR ADDITIONAL INFORMATION.

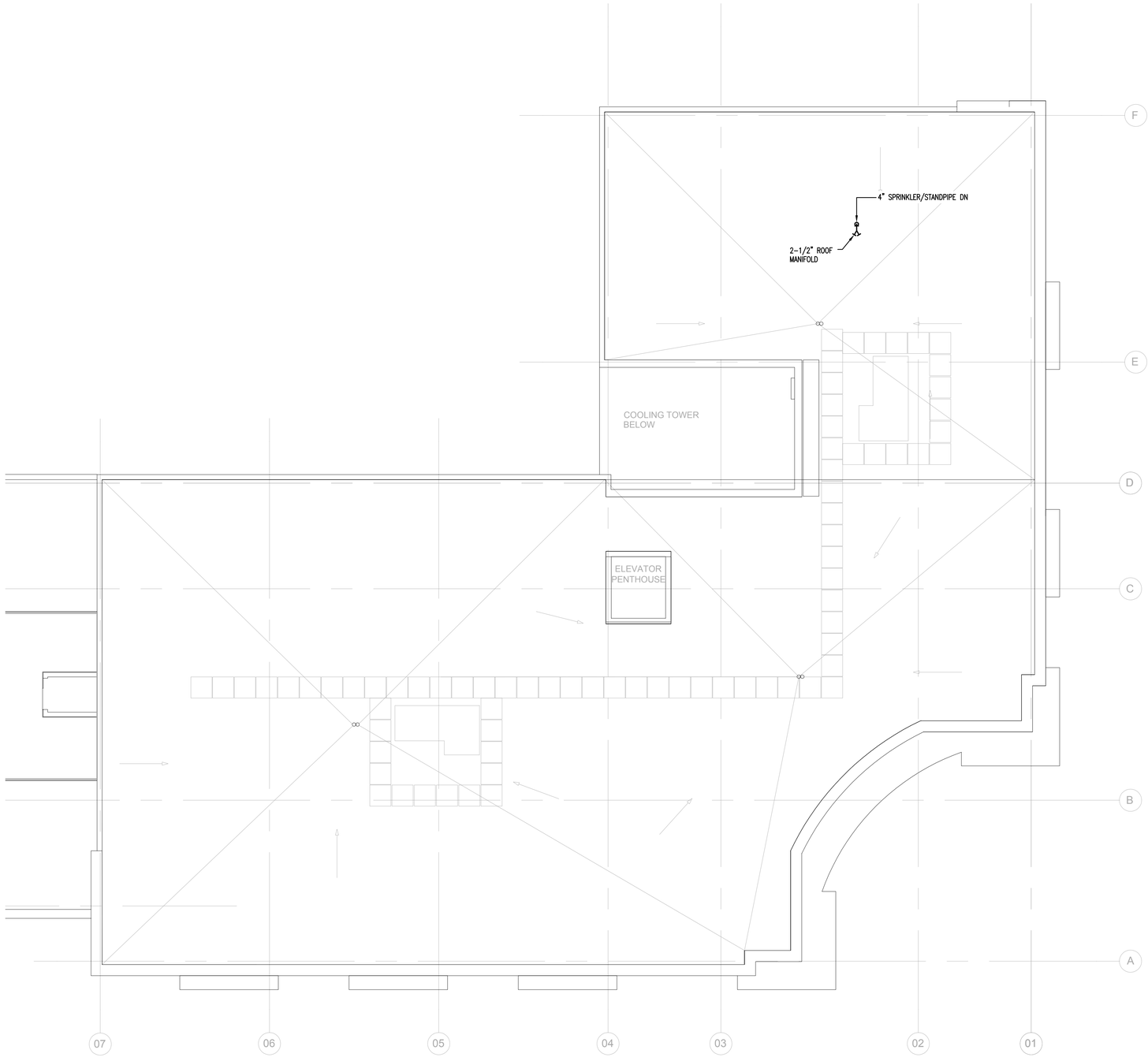

1 **UPPER ROOF PLAN (SOUTH WING) - FIRE PROTECTION**
SCALE: 1/8"=1'-0"

PROJECT NORTH

Washington Village Phase 1

20 Day Street Building B

Norwalk, CT

Trinity Washington Village Limited Partnership
&
the Norwalk Housing Authority

E-ICON ARCHITECTURE
101 SUMMER ST BOSTON MA 02110
617-451-3333 www.iconarch.com

CONSULTANT
CENTEK engineering
Centered on Solutions SM
www.CentekEng.com
(203) 488-0580
(203) 488-8587 Fax
63-2 North Branford Road, Branford, CT 06405

STAMP



KEYPLAN

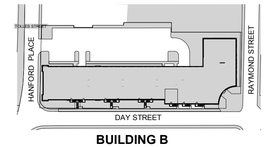

MARK	DATE	DESCRIPTION
	09-15-2014	PERMIT/ PRICING
	06-13-2014	PRICING
	11-18-2013	40% CHFA
	09-19-2013	CAM/ SPECIAL PERMIT

PROJECT NO.: 21222/CENTEK #13232.02
DRAWN BY: KNL
CHECKED BY: FRC

SHEET TITLE

BUILDING B UPPER ROOF PLAN (SOUTH WING) - FIRE PROTECTION

FP-110

J:\Jobs\13232202.MEP\PRO\FP-110.dwg Sep 17, 2014 - 10:07pm knl

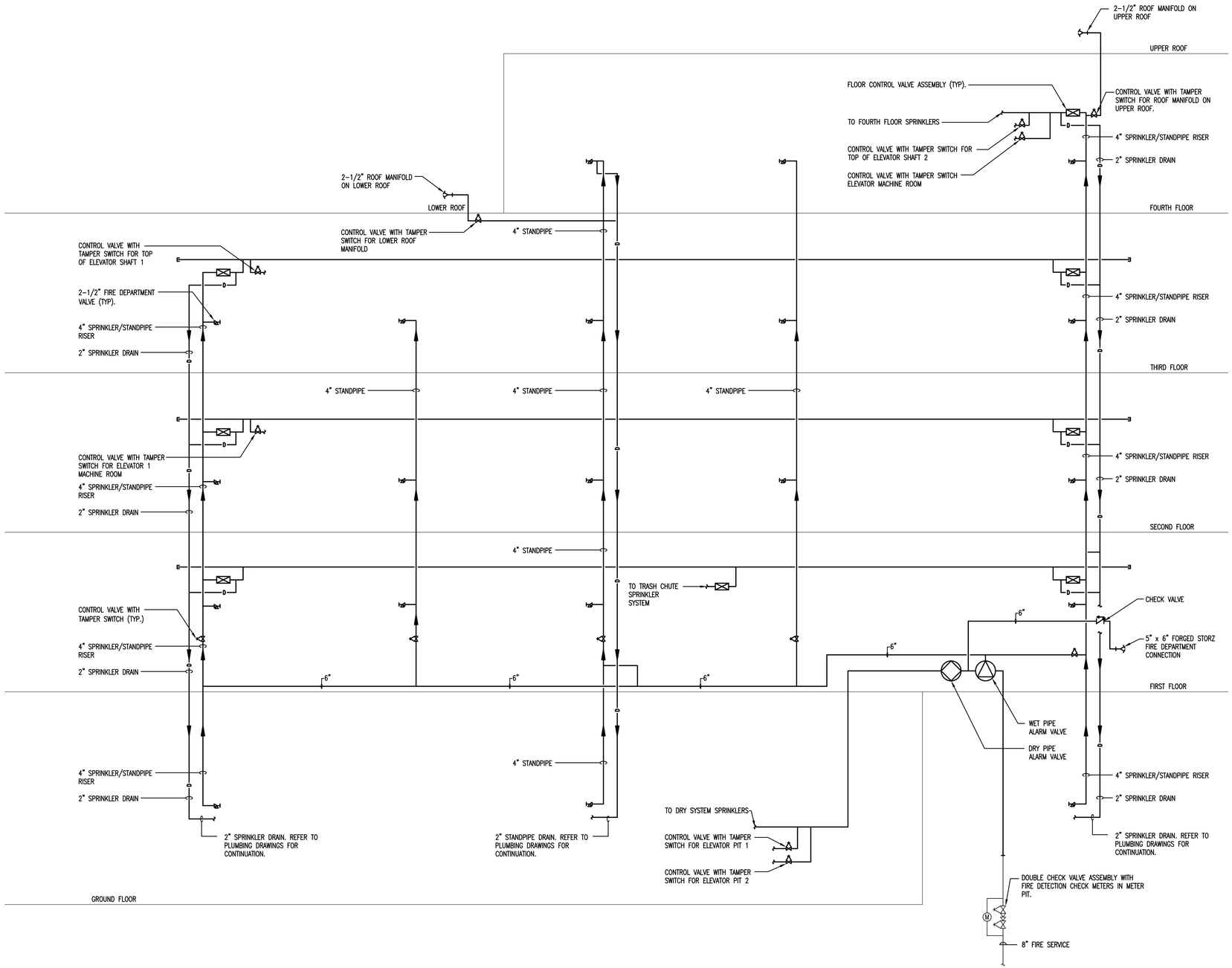

1 COMBINATION SPRINKLER/STANDPIPE RISER DIAGRAM - BUILDING 'B'
SCALE: N.T.S.

J:\Jobs\1323202.ME\FPRO\FP-200.dwg Sep 17, 2014 - 10:08pm knl

Washington Village Phase 1

20 Day Street Building B

Norwalk, CT

Trinity Washington Village Limited Partnership
&
the Norwalk Housing Authority

E-ICON ARCHITECTURE
101 SUMMER ST BOSTON MA 02110
617-451-3333 www.iconarch.com

CONSULTANT
CENTEK engineering
Centered on Solutions ℠
www.CentekEng.com
(203) 488-0580
(203) 488-8587 Fax
63-2 North Branford Road, Branford, CT 06405

STAMP



KEYPLAN

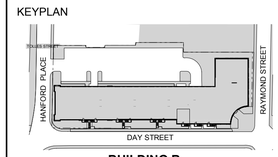

BUILDING B

N

MARK	DATE	DESCRIPTION
	09-15-2014	PERMIT/ PRICING
	06-13-2014	PRICING
	11-18-2013	40% CHFA
	09-19-2013	CAM/ SPECIAL PERMIT

PROJECT NO.: 21222/CENTEK #13232.02
DRAWN BY: KNL
CHECKED BY: FRC

SHEET TITLE

FIRE PROTECTION RISER DIAGRAM

FP-200

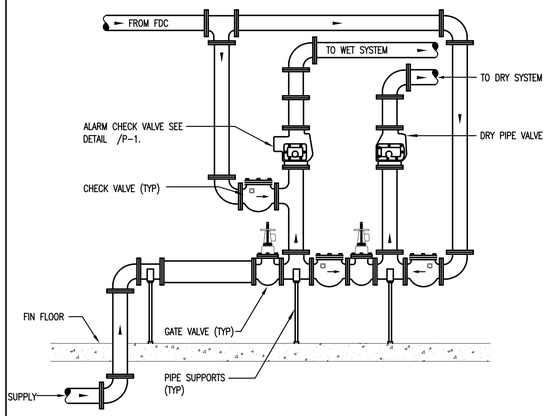

1 FIRE PIPING SCHEMATIC
N.T.S.

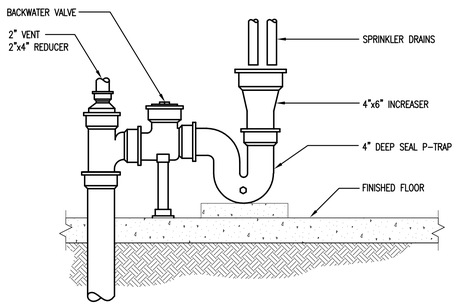

2 SPRINKLER WASTE RECEIVER
N.T.S.

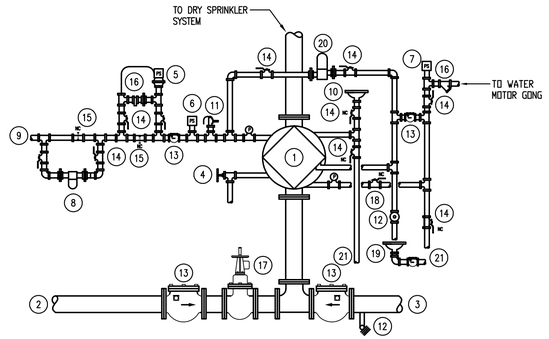

1. DRY PIPE VALVE
2. FIRE LINE SUPPLY
3. FIRE DEPT CONNECTION SUPPLY
4. 2" DRAIN VALVE
5. COMPRESSOR PRESSURE SWITCH
6. HIGH-LOW PRESSURE SWITCH TROUBLE ALARM
7. FIRE ALARM PRESSURE SWITCH
8. AIR DRYER
9. AIR SUPPLY FROM COMPRESSOR
10. PRIMER FILL CUP
11. PRESSURE RELIEF VALVE
12. BALL DRIP
13. CHECK VALVE
14. BALL OR GATE VALVE
15. NORMALLY CLOSED BY-PASS
16. STRAINER
17. TAMPER ALARM SWITCH
18. INSPECTORS TEST VALVE
19. DRIP CUP
20. RETARD CHAMBER
21. SPILL INTO DRAIN

3 DRY PIPE VALVE WITH ACCELERATOR PIPING SCHEMATIC
N.T.S.

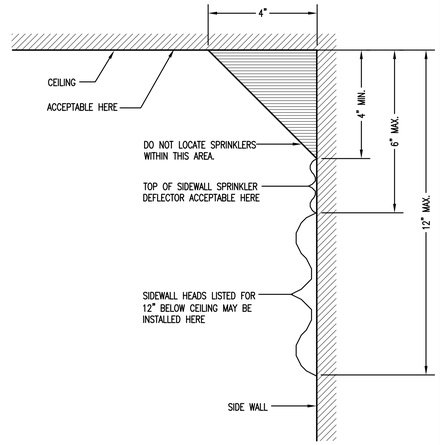

4 LOCATION OF SPRINKLERS AT WALLS
N.T.S.

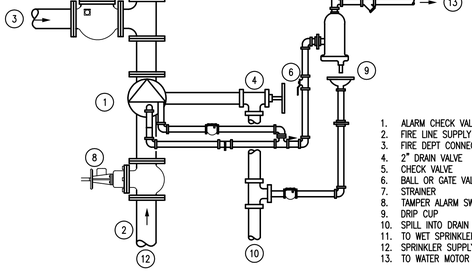

5 ALARM CHECK VALVE DETAIL
N.T.S.

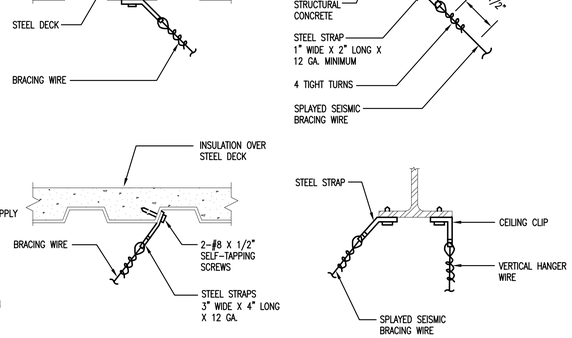

6 SEISMIC CABLE RESTRAINT ATTACHMENTS
N.T.S.

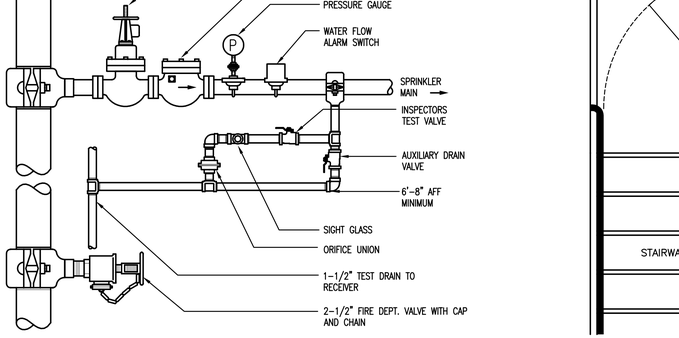

7 FLOOR CONTROL VALVE ASSEMBLY
N.T.S.

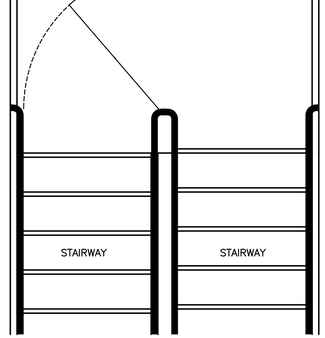

8 FIRE STANDPIPE LOCATION
N.T.S.

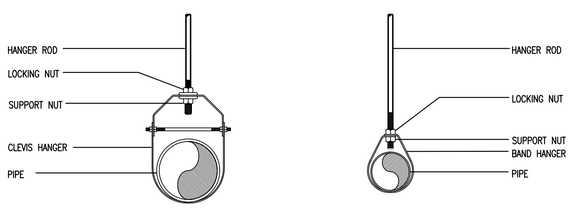

HANGER ROD SCHEDULE	
PIPE SIZE	ROD SIZE
UP TO 2"	3/8" DIA.
2 1/2" THRU 3"	1/2" DIA.
4" AND 5"	5/8"

HANGER ROD SPACING	
PIPE SIZE	MAX. ALLOWABLE SPACING
1"	7'
1 1/4"	8'
1 1/2"	9'
2"	10'
2 1/2"	11'
3" THRU 8"	12'

9 SPRINKLER PIPE HANGER INSTALLATION DETAIL
N.T.S.

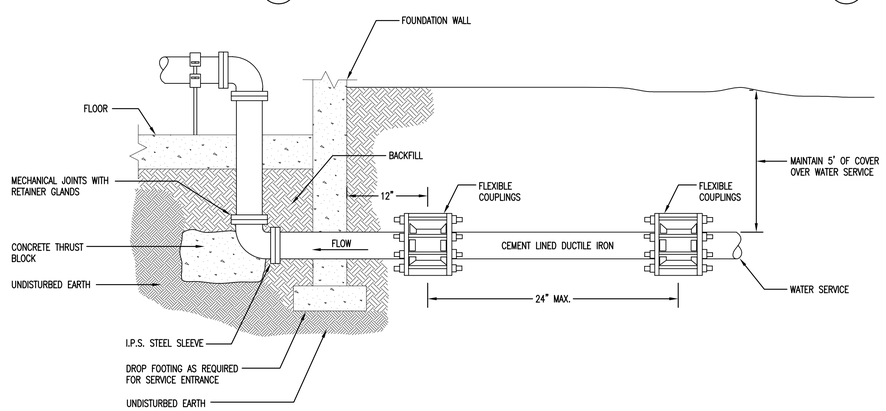

10 FIRE SERVICE ENTRANCE DETAIL
N.T.S.

J:\Jobs\1323202.MEV\FPRO\FP-300.dwg Sep 17, 2014 - 10:12pm knl

Washington Village Phase 1

20 Day Street Building B

Norwalk, CT

Trinity Washington Village Limited Partnership
&
the Norwalk Housing Authority

E-ICON ARCHITECTURE
101 SUMMER ST BOSTON MA 02110
617-451-3333 www.iconarch.com

CONSULTANT
CENTEK engineering
Centered on Solutions SM
www.CentekEng.com
(203) 488-0580
(203) 488-8587 Fax
63-2 North Branford Road, Branford, CT 06405

STAMP



KEYPLAN

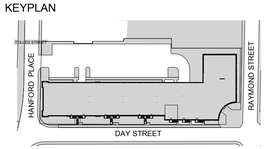

BUILDING B

N

MARK	DATE	DESCRIPTION
	09-15-2014	PERMIT/ PRICING
	06-13-2014	PRICING
	11-18-2013	40% CHFA
	09-19-2013	CAM/ SPECIAL PERMIT

PROJECT NO.: 21222/CENTEK #13232.02
DRAWN BY: KNL
CHECKED BY: FRC

SHEET TITLE

FIRE PROTECTION DETAILS

FP-300

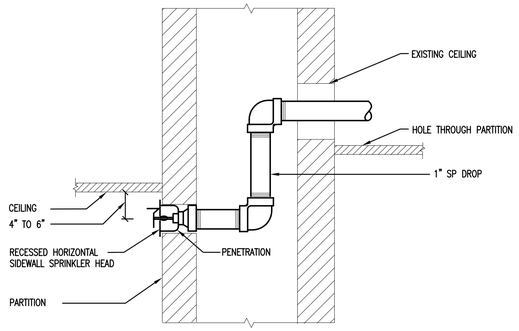

1 RECESSED SIDEWALL SPRINKLER
N.T.S.

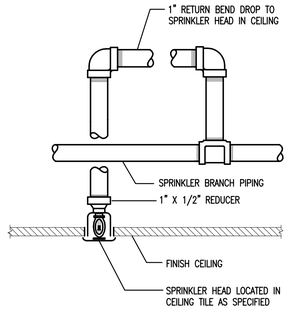

2 TYPICAL CONCEALED SPRINKLER RETURN BEND DROP
N.T.S.

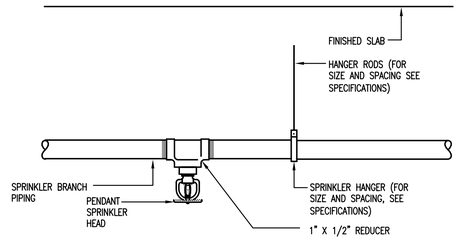

3 TYPICAL PENDENT SPRINKLER
N.T.S.

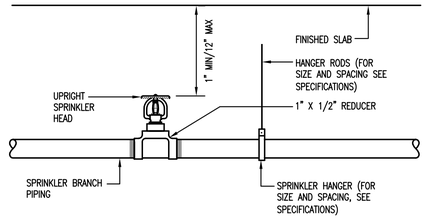

4 TYPICAL UPRIGHT SPRINKLER
N.T.S.

J:\Jobs\1323202.MEP\PRO\FP-301.dwg Sep 17, 2014 - 10:09pm knl

Washington Village Phase 1

20 Day Street Building B

Norwalk, CT

Trinity Washington Village Limited Partnership
&
the Norwalk Housing Authority

E-ICON ARCHITECTURE
101 SUMMER ST BOSTON MA 02110
617-451-3333 www.iconarch.com

CONSULTANT

CENTEK engineering
Centered on Solutions SM
www.CentekEng.com
(203) 488-0580
(203) 488-8587 Fax
63-2 North Branford Road, Branford, CT 06405

STAMP



KEYPLAN

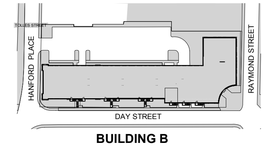

BUILDING B

N

MARK	DATE	DESCRIPTION
	09-15-2014	PERMIT/ PRICING
	06-13-2014	PRICING
	11-18-2013	40% CHFA
	09-19-2013	CAM/ SPECIAL PERMIT

PROJECT NO.:	21222/CENTEK #13232.02
DRAWN BY:	KNL
CHECKED BY:	FRC

SHEET TITLE

FIRE PROTECTION DETAILS

FP-301

NOTIFICATION DEVICE

NOTIFICATION DEVICE LAYOUT BASED ON THE FOLLOWING:
HORNS – 90 DBA
STROBES – 15 CD BATHROOMS AND ROOMS SMALLER THAN 100 SF.
75 CD ALL AREAS NOT REQUIRING 15 CD OR 110 CD.
110 CD ROOMS LARGER THAN 400 SF.

ADJUST PLACEMENT AND OUTPUT INTENSITY AS REQUIRED TO ACCOMMODATE FIELD CONDITIONS AND MEET CODE REQUIREMENTS. REFER TO PROJECT SPECIFICATIONS FOR MORE DETAILS.

ABBREVIATIONS

A	AMPERES
AF	AMPERE FRAME (CIRCUIT BREAKER RATING)
AFF	ABOVE FINISHED FLOOR
AFG	ABOVE FINISHED GRADE
AIC	AMPERE INTERRUPTING CAPACITY
AL	ALUMINUM
ARCH	ARCHITECT
AT	AMPERE TRIP (CIRCUIT BREAKER RATING)
ATC	AUTOMATIC TEMPERATURE CONTROL
AWG	AMERICAN WIRE GAUGE
BFC	BELOW FINISHED CEILING
BLDG	BUILDING
C	CONDUIT
CAT	CATALOG
C/B	CIRCUIT BREAKER
CIR	CIRCUIT
COL	COLUMN
CU	COPPER
DW	DISHWASHER
DWG	DRAWING
EC	EMPTY CONDUIT
F	FLUSH
FT	FEET
GD	GARBAGE DISPOSAL
G	GROUND
HPF	HIGH POWER FACTOR
JBOX/J.B.	JUNCTION BOX
KCMIL	ONE THOUSAND CIRCULAR MILS
KVA	KILOVOLT-AMPERES
KW	KILOWATTS
MCB	MAIN CIRCUIT BREAKER
MISC	MISCELLANEOUS
MLO	MAIN LUGS ONLY
NC	NORMALLY CLOSED
NEC	NATIONAL ELECTRICAL CODE
NO	NORMALLY OPEN
NTS	NOT TO SCALE
P	POLE
PVC	POLYVINYL CHLORIDE
R	RECESSED
S	SURFACE
SP	SPARE
SW	SWITCH
TEL	TELEPHONE
V	VOLT
Y	WYE
W	WATT
XFMR	TRANSFORMER

SYMBOL LIST

MOUNTING HEIGHTS SHALL BE AS INDICATED UNLESS SHOWN OTHERWISE ON ELECTRICAL DRAWINGS OR ARCHITECTURAL ELEVATIONS

RACEWAYS AND WIRING

L43/1,3 — HOMERUN TO PANELBOARD. "L43" INDICATES PANEL, "1,3" INDICATES CIRCUIT NUMBERS, (20A, 1P, UNLESS INDICATED OTHERWISE)

NOTES:
1. GREEN GROUND CONDUCTOR NOT INDICATED BUT SHALL BE INCLUDED IN EACH RACEWAY. SIZE SHALL BE #12AWG UNLESS INDICATED OTHERWISE.
2. HOMERUNS TO PANELBOARDS SHALL HAVE A MAXIMUM OF THREE (3) PHASE CONDUCTORS (ONE PER PHASE) PLUS NEUTRAL AND GROUND CONDUCTORS IN EACH CONDUIT.

LIGHTING FIXTURES

F1 2 / a — FLUORESCENT LIGHTING FIXTURE CEILING OR RECESSED MOUNTED. "F1" INDICATES FIXTURE TYPE, "2" INDICATES CIRCUIT NUMBER, "a" INDICATORS SWITCH CONTROL, "●" INDICATES WIRED TO LIFE SAFETY, HALF SHADED INDICATES BATTERY BACKUP.

UNDERCOUNTER TASK LIGHT

RECESSED OR SURFACE MOUNTED LIGHTING FIXTURE, SOLID FILL INDICATES WIRED TO LIFE SAFETY.

FLUORESCENT BARE LAMP STRIP OR INDUSTRIAL STRIP "●" INDICATES WIRED TO LIFE SAFETY.

WALL WASH OR DIRECTIONAL LIGHTING FIXTURE.

CEILING MOUNTED ILLUMINATED EXIT SIGN, ARROWS AS INDICATED ON DRAWINGS.

TOGGLE SWITCHES (MOUNTED 48" AFF)

S_a — SINGLE POLE TOGGLE SWITCH. "a" INDICATES FIXTURE CONTROL

S_3 — THREE WAY TOGGLE SWITCH

S_{LA} — SINGLE POLE SWITCH FOR DUPLEX RECEPTACLE "LA" INDICATES LAMP

S_P — SINGLE POLE TOGGLE SWITCH WITH PILOT LIGHT

S_{DW} — SINGLE POLE TOGGLE SWITCH FOR DISHWASHER

S_{GD} — SINGLE POLE TOGGLE SWITCH FOR GARBAGE DISPOSAL

S_{AU} — AUBIE SWITCH FOR FAN CONTROL

D3 — DIMMER SWITCH, "3" INDICATES 3-WAY.

OCCUPANCY SENSOR SWITCH. SENSORSWITCH MODEL #: WSD-PDT

V_C — CEILING MOUNTED OCCUPANCY SENSOR. SENSORSWITCH MODEL #: CM-PDT-9

RECEPTACLES (MOUNTED 18" AFF)

$R21/2_E$ — DUPLEX RECEPTACLE, "R21" INDICATES PANEL, "2" INDICATES CIRCUIT NUMBER, "E" INDICATES WIRED TO EMERGENCY PANEL

DUPLEX RECEPTACLE MOUNTED 8" ABOVE COUNTER TOP

DUPLEX RECEPTACLE WITH INTEGRAL GROUND FAULT INTERRUPTER

DUPLEX RECEPTACLE WITH INTEGRAL GROUND FAULT INTERRUPTER MOUNTED 8" ABOVE COUNTER TOP

$_{CT}$ — DOUBLE DUPLEX RECEPTACLE WITH INTEGRAL GROUND FAULT INTERRUPTER "CT" INDICATES COUNTER TOP MOUNTED

DOUBLE DUPLEX RECEPTACLE

SIMPLEX RECEPTACLE FOR REFRIGERATOR

OUTLET TO SUIT EQUIPMENT

20 — 20A, 240V, RECEPTACLE. PROVIDE (3) #10 AWG, (1) #10 AWG GROUND.

30 — 30A, 240V, DRYER RECEPTACLE. PROVIDE (3) #10 AWG, (1) #10 AWG GROUND.

40 — 40A, 240V, RECEPTACLE. PROVIDE (3) #8 AWG, (1) #8 AWG GROUND.

50 — 50A, 240V, STOVE RECEPTACLE. PROVIDE (3) #6 AWG, (1) #6 AWG GROUND.

LA — 1/2 SWITCHED DUPLEX RECEPACLE "LA" INDICATES LAMP

CALL SYSTEM

DOME LIGHT CEILING MOUNTED

BATHROOM PULL CORD

T — TRANSFORMER

POWER DISTRIBUTION EQUIPMENT

PANELBOARD, SURFACE MOUNTED

PANELBOARD, FLUSH MOUNTED

J — JUNCTION BOX, SIZED PER NEC AND EQUIPMENT VENDOR (REFER TO ARCHITECTURAL AND EQUIPMENT VENDORS' DRAWINGS FOR SIZE AND LOCATION)

MISCELLANEOUS

J_{AD} — JUNCTION BOX SIZED PER NEC. "AD" INDICATES AUTO DOOR

J_{GD} — JUNCTION BOX SIZED PER NEC. "GD" INDICATES GARBAGE DISPOSAL

J_{DW} — JUNCTION BOX SIZED PER NEC. "DW" INDICATES DISH WASHER

J_{ATC} — JUNCTION BOX SIZED PER NEC. "ATC" INDICATES CONNECTION FOR AUTOMATIC TEMPERATURE CONTROL

J_{AV} — JUNCTION BOX SIZED PER NEC. "AU" INDICATES CONNECTION FOR BATHROOM EXHAUST FAN, CONTROLLED BY AUBIE SWITCH.

J_{ES} — JUNCTION BOX SIZED PER NEC. "ES" INDICATES PROVIDE ELECTRIC STRIKE HARDWARE AND ASSOCIATED ELECTRICAL CONNECTION.

NON FUSED DISCONNECT SWITCH

FUSED DISCONNECT SWITCH

C — COAXIAL CABLE TV OUTLET

TEL — TELCO TERMINAL BOX

CTV — CABLE TV EQUIPMENT BOX

2 — NET MEDIA CENTER (I.C.C. MINI DISTRIBUTION CENTER) WITH ADJACENT DOUBLE DUPLEX RECEPTACLE. LOCATE NEAR CEILING. "2" INDICATES CIRCUIT NUMBER.

MASTER INTERCOM DEVICE

TENANT INTERCOM DEVICE

IC — INTERCOM CONTROL PANEL

B — DOOR BELL CHIME

DOOR BELL PUSH BUTTON

DT — DOORBELL TRANSFORMER

K — SECURITY SYSTEM KEYPAD

SCP — SECURITY SYSTEM CONTROL PANEL

M — SECURITY SYSTEM MOTION DETECTOR

WB — WINDOW CONTACT/ BREAK

D — DOOR CONTACT BREAK

S — SECURITY SYSTEM SIREN

P — PUSH PLATE

R — RELAY MODULE

TC — TIME CLOCK FOR SITE LIGHTING

P — PHOTOCELL FOR SITE LIGHTING CONTROL

FIRE ALARM SYSTEM

F — FIRE ALARM PULL STATION

H — HEAT DETECTOR

S — PHOTOELECTRIC SMOKE DETECTOR

CO — PHOTOELECTRIC SMOKE DETECTOR WITH ADJACENT CARBON MONOXIDE DETECTOR

S_E — PHOTOELECTRIC SMOKE DETECTOR FOR ELEVATOR RECALL.

F^V_{WP} — AUDIO/VISUAL FIRE ALARM, "V" INDICATES VISUAL ONLY, "WP" INDICATES WEATHERPROOF.

FACP — FIRE ALARM CONTROL PANEL

FARA — FIRE ALARM REMOTE ANNUNCIATOR

MM — FIRE ALARM MONITOR MODULE

CM — FIRE ALARM CONTROL MODULE

TS — TAMPER SWITCH

FS — FLOW SWITCH

B — SPRINKLER BELL

TELECOMMUNICATIONS (MOUNTED 18" AFF)

W — TELEPHONE OUTLET. "W" INDICATES MOUNTED 48"AFF

$_{CT}$ — COMBINATION TELEPHONE/DATA OUTLET – "CT" INDICATES MOUNTED 8" ABOVE COUNTER TOP.

BRANCH CIRCUIT WIRING NOTES :

1. WIRING IS SHOWN ON DRAWINGS ONLY FOR SPECIFIC ROUTES OR SPECIAL CONDITIONS.
2. WIRING AND CONDUIT SHALL BE REQUIRED BETWEEN ALL OUTLETS INDICATED WITH CIRCUIT NUMBERS AND PANEL DESIGNATIONS.
3. ALL SWITCH CONTROLS SHALL BE PROVIDED WITH WIRING AND CONDUIT AS REQUIRED.
4. ALTHOUGH ALL BRANCH CIRCUIT WIRING AND CONDUIT IS NOT SHOWN, IT IS THE INTENT OF THESE DOCUMENTS THAT A COMPLETE BRANCH CIRCUIT WIRING SYSTEM BE INSTALLED.
5. A GREEN GROUNDING CONDUCTOR SHALL BE RUN WITH ALL CIRCUITS. VERIFY CONDUIT SIZE TO ENSURE IT CAN ACCOMMODATE ALL PHASE, NEUTRAL AND GROUND CONDUCTORS.
6. MINIMUM CONDUCTOR SIZE SHALL BE 12 AWG. COPPER.

WIFI DEVICE

MAGNETIC DOOR LOCK WITH RTE TIMER SWITCH

Washington Village Phase 1

20 Day Street Building B

Norwalk, CT

Trinity Washington Village Limited Partnership
&
the Norwalk Housing Authority

E-ICON ARCHITECTURE
101 SUMMER ST BOSTON MA 02110
617-451-3333 www.iconarch.com

CONSULTANT
CENTEK engineering
Centered on Solutions ℠
www.CentekEng.com
(203) 488-0580
(203) 488-8587 Fax
63-2 North Branford Road, Branford, CT 06405

STAMP



KEYPLAN

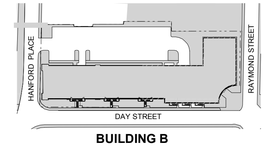

MARK	DATE	DESCRIPTION
	09-15-2014	PERMIT/ PRICING
	06-13-2014	PRICING
	11-18-2013	40% CHFA
	09-19-2013	CAM/ SPECIAL PERMIT

PROJECT NO.: 21222/CENTEK #13232.02
DRAWN BY: TJB
CHECKED BY: CKD

SHEET TITLE

ELECTRICAL LEGEND AND NOTES

E-001

J:\Jobs\13232.ME\ELEC\E-001.dwg Sep 17, 2014 - 10:03pm tgk

GENERAL NOTES

1. THE ELECTRICAL CONTRACTOR SHALL BE RESPONSIBLE FOR ALL WORK REQUIRED FOR A COMPLETE, FULLY OPERABLE INSTALLATION. ALL WORK TO BE DONE IN ACCORDANCE WITH THE LATEST APPROVED ISSUE OF THE NEC AND APPLICABLE LOCAL CODES.
2. THE DRAWINGS SHOW THE GENERAL LAYOUT AND SOME OF THE DETAIL, BUT THEY DO NOT SHOW EVERY FITTING, BEND, ... ETC. ELECTRICAL CONTRACTOR SHALL PROVIDE ALL SUCH MATERIALS TO MAKE A COMPLETE INSTALLATION.
3. DO NOT SCALE DRAWINGS; ACTUAL FIELD MEASUREMENTS AND DIMENSIONS TAKE PRECEDENCE IN ALL CASES.
4. ALL WORK SHALL BE DONE IN ACCORDANCE WITH THE STANDARD GENERAL CONDITIONS OF THE CONSTRUCTION CONTRACT, AIA DOCUMENT 201, LATEST EDITION.
5. ELECTRICAL CONTRACTOR SHALL INSTALL ALL EQUIPMENT IN ACCORDANCE WITH MANUFACTURERS INSTRUCTIONS AND OR REQUIREMENTS FOR PROPER OPERATION AND MAINTENANCE.
6. ELECTRICAL CONTRACTOR SHALL BE RESPONSIBLE FOR TESTING OF ALL PHASES OF THE WORK AND TO DEMONSTRATE TO OWNER THAT THE EQUIPMENT IS IN FULL OPERATING ORDER.
7. THE SCOPE OF WORK IS AS SHOWN ON THE PLANS AND DETAILED IN THE SPECIFICATIONS. ANY DEVIATIONS OR EXCLUSIONS FROM THIS MUST BE SUBMITTED TO ENGINEER FOR APPROVAL PRIOR TO BEING IMPLEMENTED.
8. ALL THE WIRE SIZES AND ARE BASED ON COPPER, ALUMINUM IS NOT TO BE USED.
9. ALL WIRING METHODS ARE TO BE IN ACCORDANCE WITH THE CURRENT ISSUE OF THE NATIONAL ELECTRICAL CODE, AND APPLICABLE LOCAL CODES. ADDITIONALLY, ALL WORK ON OR NEAR ENERGIZED CONDUCTORS OR EQUIPMENT SHALL BE IN ACCORDANCE WITH NFPA 70E, CHAPTER 1: SAFETY-RELATED WORK PRACTICES.
10. ALL WIRING IS TO BE CONCEALED.
11. PROVIDE INDEPENDENT SEISMIC SUPPORT OF ALL ELECTRICAL EQUIPMENT PER THE CURRENT ISSUE OF CT BUILDING CODE.
12. ELECTRICAL CONTRACTOR SHALL SECURE ALL PERMITS AND PAY FOR ALL REQUIRED FEES, INCLUDING ALL UTILITY FEES.
13. ELECTRICAL CONTRACTOR SHALL WARRANT AND GUARANTEE ALL MATERIALS AND WORKMANSHIP FOR A PERIOD OF ONE YEAR FROM THE DATE OF FINAL ACCEPTANCE BY THE OWNER.
14. ELECTRICAL CONTRACTOR SHALL PROVIDE PROOF OF LIABILITY AND PROPERTY INSURANCE TO THE OWNER, ALL DEDUCTIBLES SHALL BE PAID FOR BY THE ELECTRICAL CONTRACTOR IN THE EVENT OF A CLAIM.
15. PERSONNEL SAFETY IS OF PRIME IMPORTANCE. NO HAZARDOUS CONDITION MUST BE ALLOWED. EVERY CARE MUST BE TAKEN TO PROTECT CONSTRUCTION AND OTHER PERSONNEL. CLEANUP IS TO BE DONE ON A DAILY BASIS. ELECTRICAL CONTRACTOR TO REMOVE AND DISPOSE OF REFUSE FROM SITE.
16. ELECTRICAL CONTRACTOR SHALL PROVIDE SHOP DRAWINGS FOR APPROVAL FOR ALL LIGHTING FIXTURES, PANELS, SWITCHES, RECEPTACLES, ... ETC.
17. ELECTRICAL CONTRACTOR TO VERIFY LIGHTING FIXTURE MOUNTING REQUIREMENTS FOR VARIOUS CEILING TYPES AND ORDER APPROPRIATE HARDWARE.
18. COORDINATE EXACT PLACEMENT OF EQUIPMENT WITH ARCHITECTURAL, AND MECHANICAL PLANS, MAKE FIELD ADJUSTMENTS AS REQUIRED TO AVOID CONFLICTS, VERIFY WITH OWNER.
19. ELECTRICAL CONTRACTOR TO COORDINATE WITH ARCHITECTURAL AND MECHANICAL CONTRACTOR FOR ITEMS SUPPLIED BY THE MECHANICAL/OTHER DIVISIONS BUT INSTALLED BY THE ELECTRICAL CONTRACTOR. ELECTRICAL CONTRACTOR TO REVIEW ALL THE PLANS FOR THE PROJECT FOR ELECTRICAL WORK.
20. ELECTRICAL CONTRACTOR TO VERIFY LOADS, SETTINGS, OVERCURRENT PROTECTION... ETC TO INSURE COMPATIBILITY OF EQUIPMENT.
21. ELECTRICAL CONTRACTOR TO VERIFY ALL EQUIPMENT POWER NEEDS WITH THE ACTUAL SHOP DRAWINGS FOR THE EQUIPMENT TO BE USED, PRIOR TO STARTING ANY ELECTRICAL WORK.
22. ALL BALLASTS TO BE HPF AND HAVE THE LOWEST POSSIBLE ENERGY CONSUMPTION FOR THE GIVEN LAMP.
23. ALL ELECTRICAL PENETRATIONS TO BE FIREPROOFED TO MAINTAIN INTEGRITY OF FIRE WALLS/FLOORS/CEILINGS.
24. PROVIDE LAMICOID NAMEPLATES FOR ALL ELECTRICAL DISTRIBUTION AND DISCONNECT EQUIPMENT. ALTERNATE METHODS SHALL NOT BE ALLOWED. NAMEPLATES SHALL BE FASTENED TO PANEL WITH SCREWS.
25. THE DISPOSAL OF ALL UNUSED EXISTING ELECTRICAL EQUIPMENT REMOVED IS A PART OF THE SCOPE OF WORK. THE ELECTRICAL CONTRACTOR SHALL DISPOSE OF ALL SUCH EQUIPMENT, INCLUDING HAZARDOUS PCB CONTAINING BALLASTS, IN A MANNER CONSISTENT WITH STATE OF CT. DEPARTMENT OF ENVIRONMENTAL PROTECTION REGULATIONS, CURRENT ISSUE.
26. SHARED NEUTRALS ARE NOT TO BE USED. PROVIDE SEPARATE NEUTRALS FOR ALL CIRCUITS.
27. PRIOR TO ACQUISITION OR INSTALLATION GIVE WRITTEN NOTICE TO ARCHITECT AND ENGINEER OF ANY MATERIAL OR APPARATUS THAT IS INADEQUATE, UNSUITABLE FOR THE USE, IN VIOLATION OF LAWS, ORDINANCES, RULES, CODES OR ANY REGULATIONS OF AUTHORITIES HAVING JURISDICTION OR ANY NECESSARY ITEMS OF WORK THAT HAS BEEN OMITTED. CONTRACTOR AFFIRMS THAT ABSENT SUCH NOTICE, ALL SYSTEMS WILL FUNCTION SATISFACTORILY WITHOUT ADDITIONAL EXTRA COMPENSATION.
28. ALL PART NUMBERS ARE PROVIDED FOR THE CONVENIENCE OF THE CONTRACTOR. THEY ARE NOT TO BE CONSIDERED THE COMPLETE SPECIFICATION OF THE PRODUCT. THE PART NUMBER AND DESCRIPTION WILL BE THE COMPLETE SPECIFICATION. IN THE EVENT OF A DISCREPANCY BETWEEN THE TWO, THE MORE STRINGENT, MORE COSTLY FEATURE/PERFORMANCE WILL BE REQUIRED.
29. AT THE CONCLUSION OF THE PROJECT WHILE THE PROJECT IS OCCUPIED AND OPERATING NORMALLY, THE CONTRACTOR IS TO TAKE AND RECORD OPERATING CURRENTS IN THE DISTRIBUTION SYSTEM AND REPORT THESE READINGS TO THE ENGINEER FOR EVALUATION. ENGINEER SHOULD BE ADVISED WHEN THE READINGS ARE TO BE MADE SO THAT HE MAY ATTEND AND WITNESS SAME.
30. RISER DIAGRAMS ARE PROVIDED TO SHOW DIAGRAMMATIC GENERAL WIRING REQUIREMENTS. WIRING IS TO BE PROVIDED FOR THE PARTICULAR VENDOR/SYSTEM APPROVED FOR THE PROJECT. ALL WIRING IS TO BE CONCEALED.
31. ALL WIRING IN AIR PLENUM CEILINGS SHALL BE TEFLON COATED AND RATED FOR USE WITHIN THE PLENUM.
32. NO LOW VOLTAGE WIRING SHALL BE PERMITTED IN THE SAME RACEWAY AS POWER WIRING.
33. PROVIDE DRAG LINES IN ALL EMPTY RACEWAYS.
34. CIRCUIT NUMBERS ARE INDICATED FOR INTENT ONLY. THE ELECTRICAL CONTRACTOR SHALL ADJUST ACCORDINGLY IN THE FIELD, TO BALANCE CIRCUITS EVENLY ON ALL PHASES.
35. REFER TO ARCHITECTURAL DRAWINGS FOR THE EXACT LOCATION AND MOUNTING HEIGHTS OF ALL DEVICES AND OUTLETS.
36. FOR ALL TEL/DATA OUTLET LOCATIONS PROVIDE 2-GANG BOX WITH SINGLE GANG MUD RING. INSTALL TWO CAT-6 UTP 4-PAIR CABLES FROM OUTLET TO MINI DISTRIBUTION CENTER. PROVIDE CABLES, PORTS, TERMINATIONS, AND FACEPLATE. ALL PRODUCTS SHALL BE BY SIEMON. PROVIDE SIEMON RECOMMENDED TESTING AND CERTIFICATION. PROVIDE SINGLE CABLE FOR TELEPHONE OUTLETS.
37. DEBRIS REMOVAL FROM THE CONSTRUCTION SITE WILL BE COMPLETED BY A PREDETERMINED ROUTE AT TIMES COORDINATED WITH OWNER.
38. ELECTRICAL CONTRACTOR SHALL CREATE A TYPE WRITTEN CIRCUIT DIRECTORY TO BE PLACED IN EACH PANEL ASSOCIATED WITH THIS PROJECT WHICH SHALL INCLUDE PANEL NUMBER AND DATE.
39. ELECTRICAL CONTRACTOR SHALL COORDINATE WITH LATEST VERSION OF ALL EQUIPMENT VENDOR DRAWINGS AND PROVIDE ALL ITEMS LISTED AS PROVIDED AND/OR INSTALLED BY OWNER, CONTRACTOR, OR BY ANYONE OTHER THAN EQUIPMENT VENDOR.
40. ALL ELECTRONIC DOOR CONTROLS SHALL BE CONNECTED TO THE FIRE ALARM SYSTEM AND WIRED TO RELEASE/UNLOCK DOORS UPON FIRE ALARM AND/OR POWER OUTAGE.
41. ELECTRICAL CONTRACTOR SHALL PROVIDE CONTROLS FOR ALL LIGHT FIXTURES. EACH LIGHTED SPACE SHALL HAVE SWITCHES INSTALLED AT EACH ENTRANCE TO THE SPACE, INCLUDING ANY NECESSARY COMBINATION OF 3-WAY AND 4-WAY SWITCHES.
42. ELECTRICAL DEVICES SHALL BE ARRANGED PER ARCHITECTURAL DRAWINGS AND SPACED PER NEC MINIMUM REQUIREMENTS.
43. UNLESS OTHERWISE NOTED ALL BRANCH CIRCUIT CONDUCTORS SHALL BE COPPER AND SIZED PER NEC WITH A TEMPERATURE RATING OF 75° C. INCREASE CONDUCTOR SIZES AS NECESSARY FOR NEC REQUIRED DERATING, AND TO ADJUST FOR VOLTAGE DROP NOT EXCEEDING 2%.
44. COORDINATE WITH MECHANICAL CONTRACTOR FOR REQUIREMENTS OF ATC CIRCUITS AND OVERCURRENT PROTECTION DEVICES AND PROVIDE HACR CIRCUIT BREAKERS AND/OR FUSES WITH SPECIFIED TIME DELAY AS REQUIRED.
45. EXIT SIGNS SHALL BE WIRED FOR CONSTANT ILLUMINATION AND CONNECTED TO LINE SIDE OF NEARBY LIFE SAFETY LIGHTING CIRCUIT.
46. COORDINATE WITH FIRE ALARM VENDOR FOR APPROPRIATE INTENSITY SETTINGS ON ALL AUDIO/VISUAL FIRE ALARM DEVICES, FOR PROPER COVERAGE AT EACH LOCATION.
47. FIRE ALARM WIRING SHALL BE INSTALLED PER AHJ REQUIREMENTS AND ALL APPLICABLE STATE AND LOCAL CODES INCLUDING, BUT NOT LIMITED TO, NFPA CODES: 70, 70E, 72, AND 101.
48. ALL SMOKE/HEAT DETECTORS WITHIN THE PROJECT SHALL BE TESTED AND LABELED. PROVIDE VERIFICATION OF TEST RESULTS TO OWNER.
49. PROVIDE FIRE ALARM AS-BUILT DRAWING SHOWING ALL DEVICE LOCATIONS, ADDRESSES, NODES, LOOPS, AND PIPING OR PATHWAYS.
50. ALL CIRCUIT BREAKERS SHALL HAVE AIC RATING EQUAL TO, OR GREATER THAN, THE AIC RATING OF THE PANEL IN WHICH THEY ARE INSTALLED. CIRCUIT BREAKERS SHALL NOT BE RELOCATED TO PANELS WITH GREATER AIC RATING THAN THE CIRCUIT BREAKER.
51. ALL NEW ELECTRICAL RECEPTACLES SHALL BE TESTED WITH AN ELECTRICAL RECEPTACLE ANALYZER APPROVED BY THE OWNER. A REPORT OF THE TEST RESULTS SHALL BE PROVIDED TO THE ENGINEER AND SHALL INDICATE ROOM NUMBER, RECEPTACLE ID, LINE VOLTAGE, CORRECT POLARITY, NEUTRAL TO GROUND VOLTS, GROUND TO GROUND VOLTS AND OHMS, TENSION, AND RECEPTACLE STATUS.
52. ALL CIRCUITS FOR DEVICES SERVING AUDIO VISUAL EQUIPMENT SHALL BE CONNECTED TO THE SAME PHASE OF ELECTRICAL POWER AND SERVED FROM THE SAME PANEL. ADJUST CIRCUIT ASSIGNMENTS AS REQUIRED. COORDINATE WITH OWNER'S A/V REPRESENTATIVE TO VERIFY DEVICES SERVING A/V EQUIPMENT.
53. CABLE TV OUTLETS SHALL BE PROVIDED WITH A BACKBOX, FACEPLATE, TERMINATION/UTILIZATION PORT, AND DEDICATED HOMERUN CABLE TO SOURCE. PROVIDE ALL TERMINATIONS.
54. PROVIDE (1) CABLE TV OUTLET IN EACH BEDROOM, (2) CABLE TV OUTLETS IN EACH LIVING ROOM, OFFICE, FITNESS ROOM, YOGA ROOM, AND COMMON ROOMS.
55. PROVIDE (2) TEL/DATA OUTLETS IN EACH LIVING ROOM, OFFICE, LOUNGE, FITNESS ROOM, YOGA, AND ALL COMMON ROOMS.
56. PROVIDE TELEPHONE OUTLETS IN EACH KITCHEN AND BEDROOM.
57. PROVIDE CARBON MONOXIDE DETECTORS ON EACH FLOOR OF EACH UNIT.
58. ALL LIGHTING SHALL BE ENERGY STAR RATED AND CONFORM TO ALL LEED CERTIFICATION REQUIREMENTS.
59. THE ENTIRE ELECTRICAL INSTALLATION, INCLUDING LIGHTING, SHALL CONFORM TO ALL CONNECTICUT HOUSING FINANCE AUTHORITY "CHFA" STANDARDS.
60. ALL 120V, 15 AND 20 AMP, SINGLE POLE, CIRCUIT BREAKERS SHALL BE LISTED AS COMBINATION TYPE AFCI.
61. ALL 120V, 15 AND 20 AMP, RECEPTACLES SHALL BE LISTED TAMPER RESISTANT.
62. ALL ELECTRICAL WORK SHALL BE IN ACCORDANCE WITH 2011 NEC.
63. IN THE EVENT OF A DISCREPANCY BETWEEN ANY OF THE PROJECT DOCUMENTS PROVIDED BY ENGINEER OR OWNER, THE MORE STRINGENT, MORE COSTLY FEATURE/PERFORMANCE WILL BE REQUIRED.
64. WALLS AND CEILINGS ARE FIRE RATED CONSTRUCTION. ALL LIGHT FIXTURES, DEVICES, BOXES, AND OTHER ELECTRICAL EQUIPMENT INSTALLED IN WALLS AND CEILINGS SHALL BE FIRE RATED OR IN A FIRE RATED ENCLOSURE TO MAINTAIN THE FIRE RATING OF THE WALL/CEILING WHERE INSTALLED.
65. ALL RESIDENTIAL UNIT ELECTRICAL PANELS SHALL BE SHOP PAINTED A CUSTOM COLOR SELECTED BY ARCHITECT. PROVIDE PANEL COVERS WITH PAINTABLE FINISH.
66. PROVIDE ALL ADA AND CHFA REQUIRED DEVICES IN EACH UNIT DESIGNATED FOR HEARING IMPAIRED INCLUDING, BUT NOT BE LIMITED TO: ILLUMINATED DOOR CHIME AND AUDIO/VISUAL FIRE ALARM NOTIFICATION DEVICES. NOTIFICATION DEVICES SHALL BE WIRED TO THE SAME CIRCUIT AS SMOKE AND CARBON DIOXIDE DETECTORS, AND UPON ANY ONE ALARM ALL DEVICES IN THE UNIT SHALL ACTIVATED.
67. ALL RECEPTACLES ASSOCIATED WITHIN 6' OF THE OUTSIDE EDGE OF A SINK OR LAVATORY SHALL HAVE GROUND FAULT CIRCUIT INTERRUPTER PROTECTION FOR PERSONNEL.
68. COORDINATE WITH MECHANICAL AND PLUMBING PLANS AND PROVIDE CIRCUITS AND WIRING FOR ALL MECHANICAL AND PLUMBING EQUIPMENT.

Washington Village Phase 1

20 Day Street Building B

Norwalk, CT

Trinity Washington Village Limited Partnership
&
the Norwalk Housing Authority

E-ICON ARCHITECTURE
101 SUMMER ST BOSTON MA 02110
617-451-3333 www.iconarch.com

CONSULTANT
CENTEK engineering
Centered on Solutions ℠
www.CentekEng.com
(203) 488-0580
(203) 488-8587 Fax
63-2 North Branford Road, Branford, CT 06405

STAMP



KEYPLAN

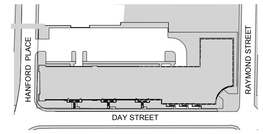

BUILDING B

N

MARK	DATE	DESCRIPTION
	09-15-2014	PERMIT/ PRICING
	06-13-2014	PRICING
	11-18-2013	40% CHFA
	09-19-2013	CAM/ SPECIAL PERMIT

PROJECT NO.: 21222/CENTEK #13232.02
DRAWN BY: TJB
CHECKED BY: CKD

SHEET TITLE

ELECTRICAL GENERAL NOTES

E-002

J:\Jobs\13232\02.ME\ELEC\E-002.dwg Sep 17, 2014 - 10:03pm tgk

LIGHTING FIXTURE SCHEDULE

TYPE	MANUFACTURER	CATALOG NUMBER	NOTES	LAMP DATA			VOLTAGE	MOUNTING
				NO.	WATTS	TYPE		
A	ARTEMIDE	DUPLO CURVED WALL SCONCE	FINISH & TRIM BY ARCH	1	18	CFL	120	SURFACE
A1	ARTEMIDE	LED E26/A19	FINISH & TRIM BY ARCH	2	17	LED	120	SURFACE
B	OXYGEN	2-6135-24 JOURNEY CEILING MOUNT	FINISH & TRIM BY ARCH	2	26	QUAD CFL	120	SURFACE
C	OXYGEN	2-6136-224 JOURNEY CEILING MOUNT	FINISH & TRIM BY ARCH	1 1	22 40	T5 CIRCLINE	120	SURFACE
D	OXYGEN	3-692-224MODULO CEILING MOUNT	FINISH & TRIM BY ARCH	1	8.9	LED	120	SURFACE
E	PHILIPS	EW PROFILE POWERCORE	FINISH & TRIM BY ARCH	1	10	LED	120	SURFACE
F	PLC LIGHTING	SLICK-120V (TR14-WH) WHITE	FINISH & TRIM BY ARCH	1	45	MR16	120	TRACK
G	OXYGEN	2-5137-24-BP224	FINISH & TRIM BY ARCH	1	54	T5HO	120	SURFACE
G1	SPRING CITY ELECTRICAL	WSH-PF83	FINISH & TRIM BY ARCH	1	150	HPS	120	SITE
G2	KIM LIGHTING	1SA-SAR4-150MH120-BL	FINISH & TRIM BY ARCH	1	150	MH	120	SITE
H	PANASONIC	WHISPERGREEN FV-08VKL1 80 CFM	FINISH & TRIM BY ARCH	2 1	18 4	CFL	120	RECESSED
J	LIGHTWAY	CSLC-11-A-1Q26-3-W2-WSA-ES	FINISH & TRIM BY ARCH	1	26	CFL	120	SURFACE
K	NEO RAY	14DIW- 21T5-04-1EB-SI-EB-SI-EM-GLR-S14	FINISH & TRIM BY ARCH	3	28	T5	120	SURFACE
L	NEO RAY	PENTAFLEX TM 79PF1T5-16-1EB-SI-GLR	FINISH & TRIM BY ARCH	1	-	T5	120	RECESSED
M	COOPER LIGHTING	ML709827ICAT120D 900 SERIES LED DIMMABLE MODULE	FINISH & TRIM BY ARCH	1	14	LED	120	RECESSED
N	PRECISION ARCH. LIGHTING	LMS01-PH-SE-4-CT-FO1M-120-T5HO-DIM	FINISH & TRIM BY ARCH	1	54	T5HO	120	PENDANT
P1	ARTEMIDE	TAGORA - 970 SUSPENSION	FINISH & TRIM BY ARCH	4	24	T5HO	120	PENDANT
P2	ARTEMIDE	TAGORA - 570 SUSPENSION	FINISH & TRIM BY ARCH	4	36	TT5	120	PENDANT
P3	ARTEMIDE	TAGORA - 270 SUSPENSION	FINISH & TRIM BY ARCH	2	26	CFL	120	PENDANT
Q	NEMO	LUNA 320 - MEDIUM F	FINISH & TRIM BY ARCH	1	20	LED	120	RECESSED
R	OXYGEN	2-6205-24 ECHO PENDANT	FINISH & TRIM BY ARCH	1	23	GU24	120	PENDANT
S	ARTEMIDE	LOGICO TRIPLE LINEAR SUSPENSION	FINISH & TRIM BY ARCH	3	17	LED	120	PENDANT
U	BELUX	51002403-30-5-CLOUD-30-5	FINISH & TRIM BY ARCH	1	70	HALOGEN	120	PENDANT
W	PROGRESS	ALPHA TRACK P9104-09 WITH 3X P6112-09 FIXTURES	FINISH & TRIM BY ARCH	TBD	TBD	TBD	120	TRACK
X	BEGHELLI	BS100-T5HO	FINISH & TRIM BY ARCH	2	24	T5HO	120	SURFACE
Y	LITE- TECH	LS-4-54T5HO - 120 EL	FINISH & TRIM BY ARCH	1	54	T5HO	120	SURFACE
Z	TBD	TBD	FINISH & TRIM BY ARCH	TBD	TBD	TBD	120	TBD
Z1	SOVEREIGN	TBD	FINISH & TRIM BY ARCH	TBD	TBD	TBD	TBD	TBD
Z2	BEGHELLI	XLP-S3	FINISH & TRIM BY ARCH	TBD	TBD	TBD	TBD	TBD
AA	INVUE	ENV-CO2-LED-E1-BL4-BK-PC-277-BBB	FINISH & TRIM BY ARCH	2	54	LED	120	TBD
BB	OXYGEN	2-712-224 LEDA SCONCE	FINISH & TRIM BY ARCH	2	13	CFL	120	WALL
BBB	OXYGEN	2-707-16 NEOMA SCONCE	FINISH & TRIM BY ARCH	2	13	CFL	120	WALL
CC	OXYGEN	2-711-224 TELSHOR VANITY	FINISH & TRIM BY ARCH	2	26	CFL	120	WALL

LIGHT FIXTURE NOTES:

1. FOR PRICING, CONTRACTOR SHALL CARRY AN ALLOWANCE OF $300 FOR EACH UNSPECIFIED LIGHT FIXTURE.
2. ALL LIGHTING FIXTURES SHALL BE ENERGY STAR RATED AND CONFORM TO ELECTRIC UTILITY COMPANY REQUIREMENTS.
3. REFER TO ARCHITECTURAL REFLECTED CEILING PLANS AND INTERIOR ELEVATIONS FOR EXACT LOCATIONS AND MOUNTING HEIGHTS OF ALL LIGHTING FIXTURES.
4. HALF-SHADED LIGHT FIXTURE INDICATES WIRED TO LIFE SAFETY CIRCUIT. INSTALL SUPERVISORY BY PASS RELAY FOR ALL LIGHTING CONNECTED TO LIFE SAFETY CICUITS. REFER TO DETAILS.
5. DIMMERS TO BE COMPATIBLE WITH LIGHTING FIXTURES ON CIRCUIT.
6. THE ELECTRICAL CONTRACTOR SHALL VERIFY ALL CEILING TYPES AND/OR COORDINATE ALL FIXTURE TRIMS PRIOR TO PURCHASE OF FIXTURES.
7. ALL FLUORESCENT BALLASTS SHALL BE ELECTRONIC PROGRAM START TYPE AND SUITABLE FOR LAMPS SERVED. ALL FIXTURES SHALL BE PROVIDED WITH ONE BALLAST (UNLESS OTHERWISE INDICATED).
8. ALL COMPACT FLUORESCENTS SHALL BE PROVIDED WITH HIGH POWER FACTOR BALLASTS.
9. ELECTRICAL CONTRACTOR SHALL FURNISH AND INSTALL ALL LIGHTING FIXTURES COMPLETE WITH MOUNTING HARDWARE AND LAMPS.
10. CATALOG NUMBER SHOWN REPRESENTS FIXTURE FAMILY ONLY. ITEM DESCRIPTION SHALL BE USED TO DETERMINE FINAL FIXTURE MODEL #.
11. ALL FLUORESCENT LAMPS SHALL HAVE A COLOR TEMPERATURE SPECIFIED BY ARCHITECT.
12. ALL BATTERY OPERATED EMERGENCY FIXTURES SHALL BE CHARGED FROM NEARBY LIFE SAFETY CIRCUITS, AND SHALL BE WIRED TO MONITOR THE LINE SIDE OF THE NORMAL POWER LIGHTING CIRCUIT SERVING THE AREA.
13. INTERIOR AND EXTERIOR LIGHTING MUST CONFORM TO CHFA REQUIREMENTS.
14. EXTERIOR LIGHTING SHALL BE CONTROLLED BY A PHOTOCELL AND WIRED THROUGH A TIME CLOCK.

LEGEND OF CONDUIT AND CONDUCTOR

COPPER CONDUCTORS

FEEDER SYMBOL	CONDUCTORS (SINGLE OR 3 PHASE, 3 WIRE) WITH GROUND	RACEWAY SIZE CONDUIT	CONDUCTORS (3 PHASE, 4 WIRE) WITH GROUND	RACEWAY SIZE CONDUIT	NOMINAL AMPERE RATING
(1)	3#4 & 1#10G.	1"			60
(2)			4#4 & 1#10G.	1 1/4"	
(3)	3#4 & 1#8G.	1"			70
(4)			4#4 & 1#8G.	1 1/4"	
(5)	3#1 & 1#8G.	1 1/2"			100
(6)			4#1 & 1#8G.	1 1/2"	
(7)	3#1 & 1#6G.	1 1/2"			125
(8)			4#1 & 1#6G.	2"	
(9)	3#1/0 & 1#6G.	1 1/2"			150
(10)			4#1/0 & 1#6G.	2"	
(11)	3#2/0 & 1#6G.	2"			175
(12)			4#2/0 & 1#6G.	2"	
(13)	3#3/0 & 1#6G.	2"			200
(14)			4#3/0 & 1#6G.	2"	
(15)	3#4/0 & 1#4G.	2"			225
(16)			4#4/0 & 1#4G.	2 1/2"	
(17)	3#250 KCMIL & 1#4G.	2 1/2"			250
(18)			4#250 KCMIL & 1#4G.	3"	
(19)	3#350 KCMIL & 1#4G.	3"			300
(20)			4#350 KCMIL & 1#4G.	3"	
(21)	3#500 KCMIL & 1#3G.	3 1/2"			350
(22)			4#500 KCMIL & 1#3G.	4"	
(23)	3#600 KCMIL & 1#3G.	3 1/2"			400
(24)			4#600 KCMIL & 1#3G.	4"	
(25)	6#250 KCMIL & 2#2G.	2-2 1/2"			500
(26)			8#250 KCMIL & 2#2G.	2-3"	
(27)	6#350 KCMIL & 2#1G.	2-3"			600
(28)			8#350 KCMIL & 2#1G.	2-3"	
(29)	6#600 KCMIL & 2#1/0G.	2-3 1/2"			800
(30)			8#600 KCMIL & 2#1/0G.	2-4"	
(31)	9#400 KCMIL &3#2/0G.	3-3"			1000
(32)			12#400 KCMIL &3#2/0G.	3-3"	
(33)	9#600 KCMIL & 3#3/0G.	3-3 1/2"			1200
(34)			12#600 KCMIL & 3#3/0G.	3-4"	
(35)	12#600 KCMIL & 4#4/0G.	4-3 1/2"			1600
(36)			16#600 KCMIL & 4#4/0G.	4-4"	

NOTES:
1. FEEDERS SHALL BE PROVIDED WITH MAC ADAPTERS AS REQUIRED TO COORDINATE WITH BREAKER LUG SIZES.
2. SEE SPECIFICATIONS FOR ACCEPTABLE CONDUCTOR TYPES.

208 VOLT, 3 PHASE MOTOR BRANCH CIRCUITS

HP	FLA (1)	NEMA (2) STARTER	C.B. (3)	MCP (2)	FUSES (3)		ø WIRE (4)	GROUND WIRE (5)	CONDUIT (6)
					NEC	T.D.			
1/2	2.4	1	20	7	10	4	12	12	3/4
3/4	3.5	1	20	7	10	5	12	12	3/4
1	4.6	1	20	7	15	10	12	12	3/4
1 1/2	6.6	1	20	7	20	10	12	12	3/4
2	7.5	1	20	15	25	15	12	12	3/4
3	10.6	1	30	15	30	20	10	10	3/4
5	16.7	1	40	30	50	30	10	10	3/4
7 1/2	24.2	1	50	30	70	40	8	10	3/4
10	30.8	2	70	50	90	50	6	8	3/4
15	46.2	3	100	70	150	80	4	8	1
20	59.4	3	150	100	175	100	2	6	1 1/4
25	74.8	3	175	100	225	125	1	6	1 1/2
30	88	4	200	150	250	150	1/0	6	1 1/2
40	114	4	250	150	350	200	2/0	4	2
50	143	5	300	150	400	250	4/0	4	2
60	169	5	400	250	500	300	250KCMIL	3	2 1/2
75	211	5	400	400	600	350	400KCMIL	3	3
100	273	6	500	--	800	450	600KCMIL	2	4

Washington Village Phase 1

20 Day Street Building B

Norwalk, CT

Trinity Washington Village Limited Partnership
&
the Norwalk Housing Authority

E-ICON ARCHITECTURE
101 SUMMER ST BOSTON MA 02110
617-451-3333 www.iconarch.com

CONSULTANT
CENTEK engineering
Centered on Solutions ℠
www.CentekEng.com
(203) 488-0580
(203) 488-8587 Fax
63-2 North Branford Road, Branford, CT 06405

STAMP



KEYPLAN

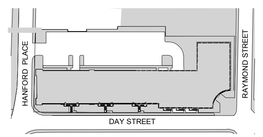

BUILDING B

N

MARK	DATE	DESCRIPTION
	09-15-2014	PERMIT/ PRICING
	06-13-2014	PRICING
	11-18-2013	40% CHFA
	09-19-2013	CAM/ SPECIAL PERMIT

PROJECT NO.: 21222/CENTEK #13232.02
DRAWN BY: TJB
CHECKED BY: CKD

SHEET TITLE

ELECTRICAL SCHEDULES

E-003

J: \Jobs\13232DZ.ME\ELEC\E-003.dwg Sep 17, 2014 - 10:04pm tgk

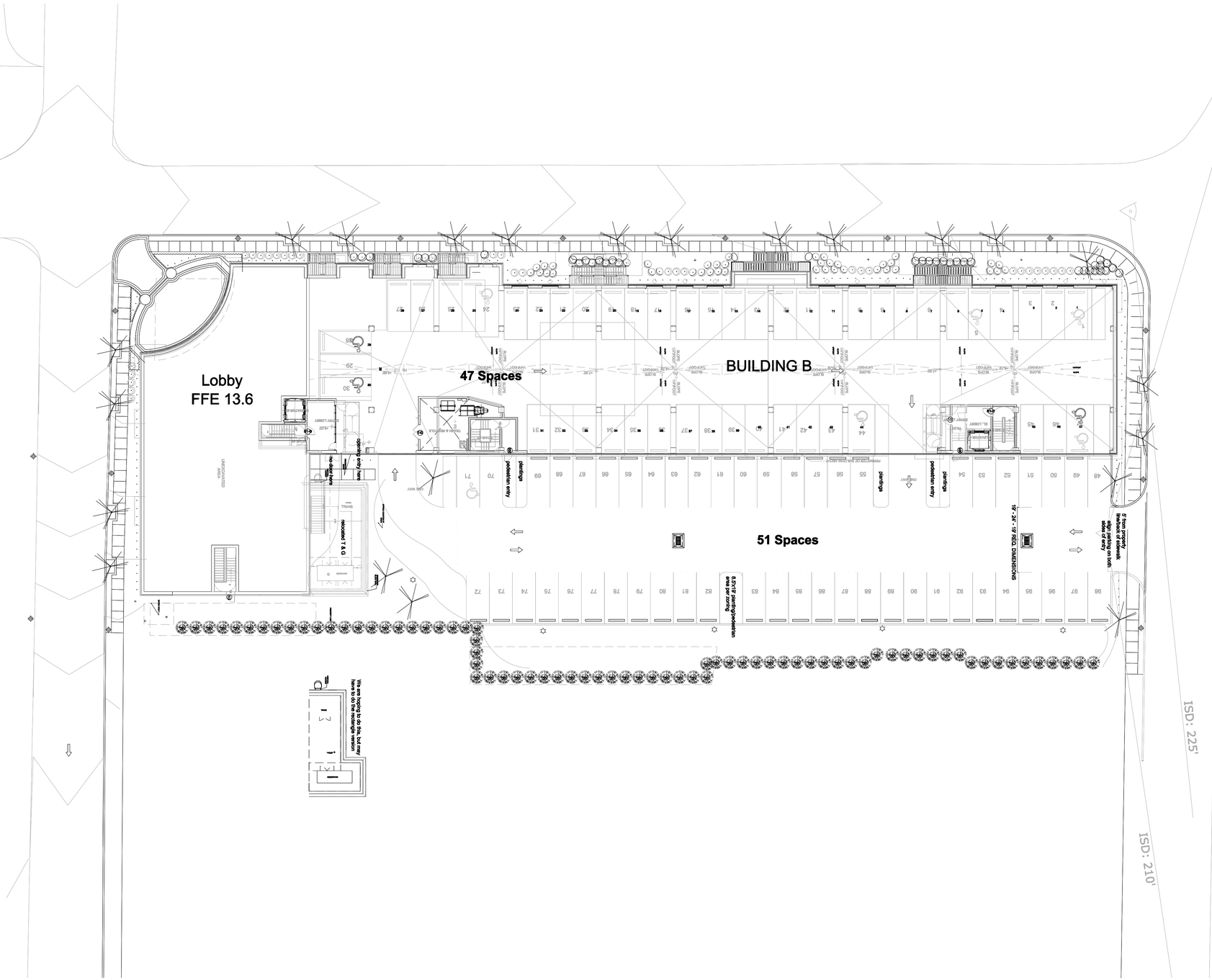

1 **SITE LOCATION PLAN - ELECTRICAL**
SCALE: 1"=30'-0"

Washington Village Phase 1

20 Day Street Building B

Norwalk, CT

Trinity Washington Village Limited Partnership
&
the Norwalk Housing Authority

E-ICON ARCHITECTURE
101 SUMMER ST BOSTON MA 02110
617-451-3333 www.iconarch.com

CONSULTANT
CENTEK engineering
Centered on Solutions ℠
www.CentekEng.com
(203) 488-0580
(203) 488-8587 Fax
63-2 North Branford Road, Branford, CT 06405

STAMP



KEYPLAN

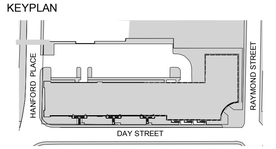

BUILDING B

N

MARK	DATE	DESCRIPTION
	09-15-2014	PERMIT/ PRICING
	06-13-2014	PRICING
	11-18-2013	40% CHFA
	09-19-2013	CAM/ SPECIAL PERMIT

PROJECT NO.: 21222/CENTEK #13232.02
DRAWN BY: TJB
CHECKED BY: CKD

SHEET TITLE

SITE LOCATION PLAN- ELECTRICAL

PROJECT NORTH

E-100

J:\Jobs\13232.02.ME\ELEC\E-100.dwg Sep 17, 2014 - 10:04pm tgk

ELECTRICAL WORK NOTES

(1) (2) #4 AWG, (1) #4 AWG GND, 1"C. TO DEDICATED 30A, 2P, CIRCUIT BREAKER IN ASSOCIATED UNIT ELECTRIC PANEL. CONDUIT SHALL BE ROUTED ACROSS ROOF ON SLEEPERS.

GENERAL NOTE:

1. COORDINATE ALL WORK WITH ALL OTHER TRADES. REFER TO OTHER TRADE'S DRAWINGS FOR ADDITIONAL INFORMATION.
2. FIRE ALARM DEVICES SHOWN TYPICAL.
3. LIGHTING SHOWN TYPICAL.

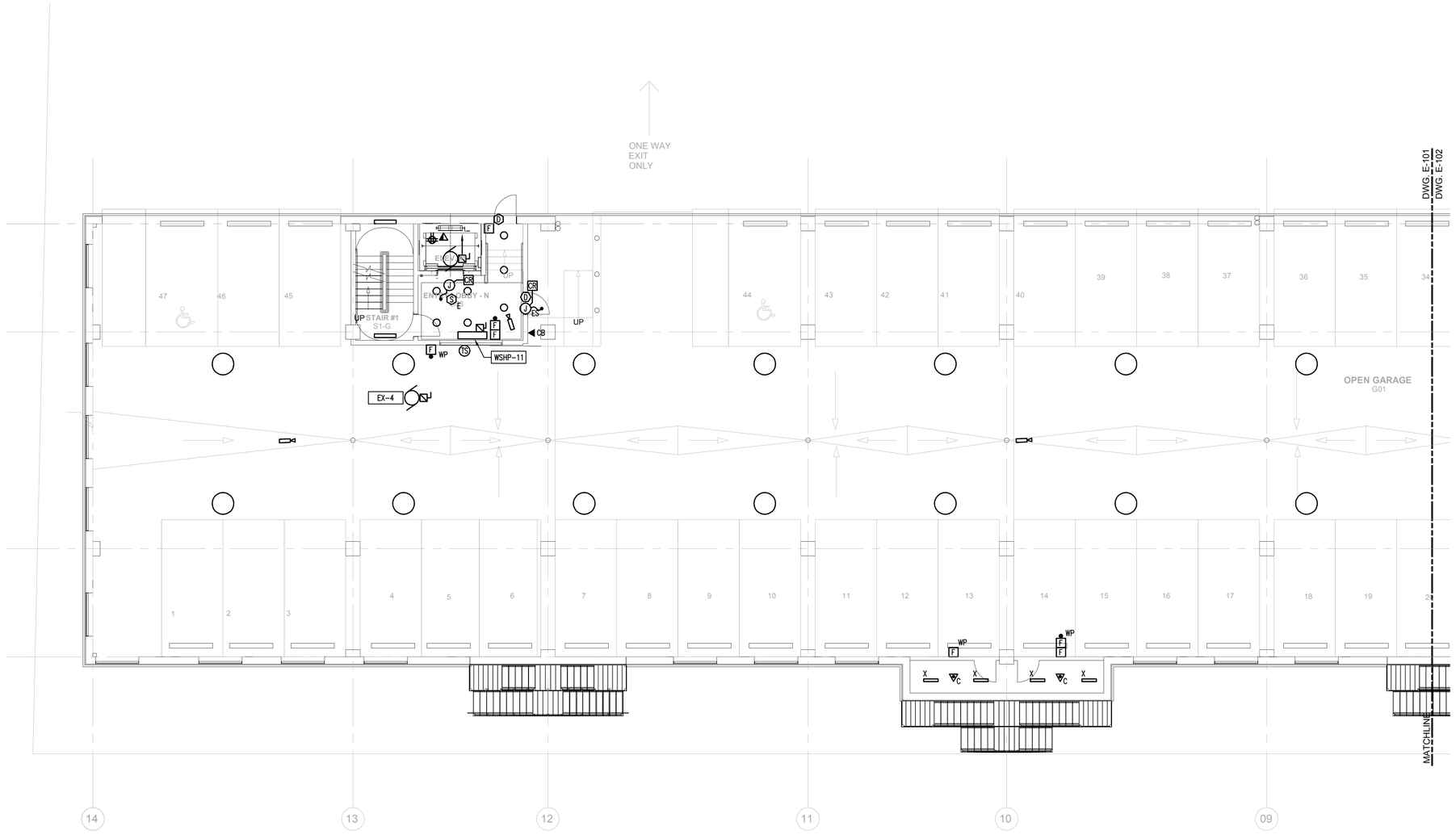

1 **GROUND LEVEL PLAN (NORTH WING) - ELECTRICAL**
SCALE: 1/8"=1'-0"

PROJECT NORTH

Washington Village Phase 1

20 Day Street Building B

Norwalk, CT

Trinity Washington Village Limited Partnership
&
the Norwalk Housing Authority

E-ICON ARCHITECTURE
101 SUMMER ST BOSTON MA 02110
617-451-3333 www.iconarch.com

CONSULTANT
CENTEK engineering
Centered on Solutions ℠
www.CentekEng.com
(203) 488-0580
(203) 488-8587 Fax
63-2 North Branford Road, Branford, CT 06405

STAMP



KEYPLAN

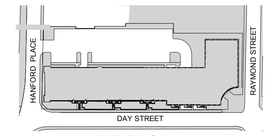

MARK	DATE	DESCRIPTION
	09-15-2014	PERMIT/ PRICING
	06-13-2014	PRICING
	11-18-2013	40% CHFA
	09-19-2013	CAM/ SPECIAL PERMIT

PROJECT NO.: 21222/CENTEK #13232.02
DRAWN BY: TJB
CHECKED BY: CKD

SHEET TITLE

BUILDING B GROUND LEVEL PLAN (NORTH WING) - ELECTRICAL

E-101

J:\Jobs\1323202.ME\ELEC\E-101 & E-102.dwg Sep 17, 2014 - 10:05pm tgk

ELECTRICAL WORK NOTES

1. (2) #4 AWG, (1) #4 AWG GND, 1"C. TO DEDICATED 30A, 2P, CIRCUIT BREAKER IN ASSOCIATED UNIT ELECTRIC PANEL. CONDUIT SHALL BE ROUTED ACROSS ROOF ON SLEEPERS.
2. BELL FOR WET SYSTEM.
3. BELL FOR DRY SYSTEM.

GENERAL NOTE:

1. COORDINATE ALL WORK WITH ALL OTHER TRADES. REFER TO OTHER TRADE'S DRAWINGS FOR ADDITIONAL INFORMATION.

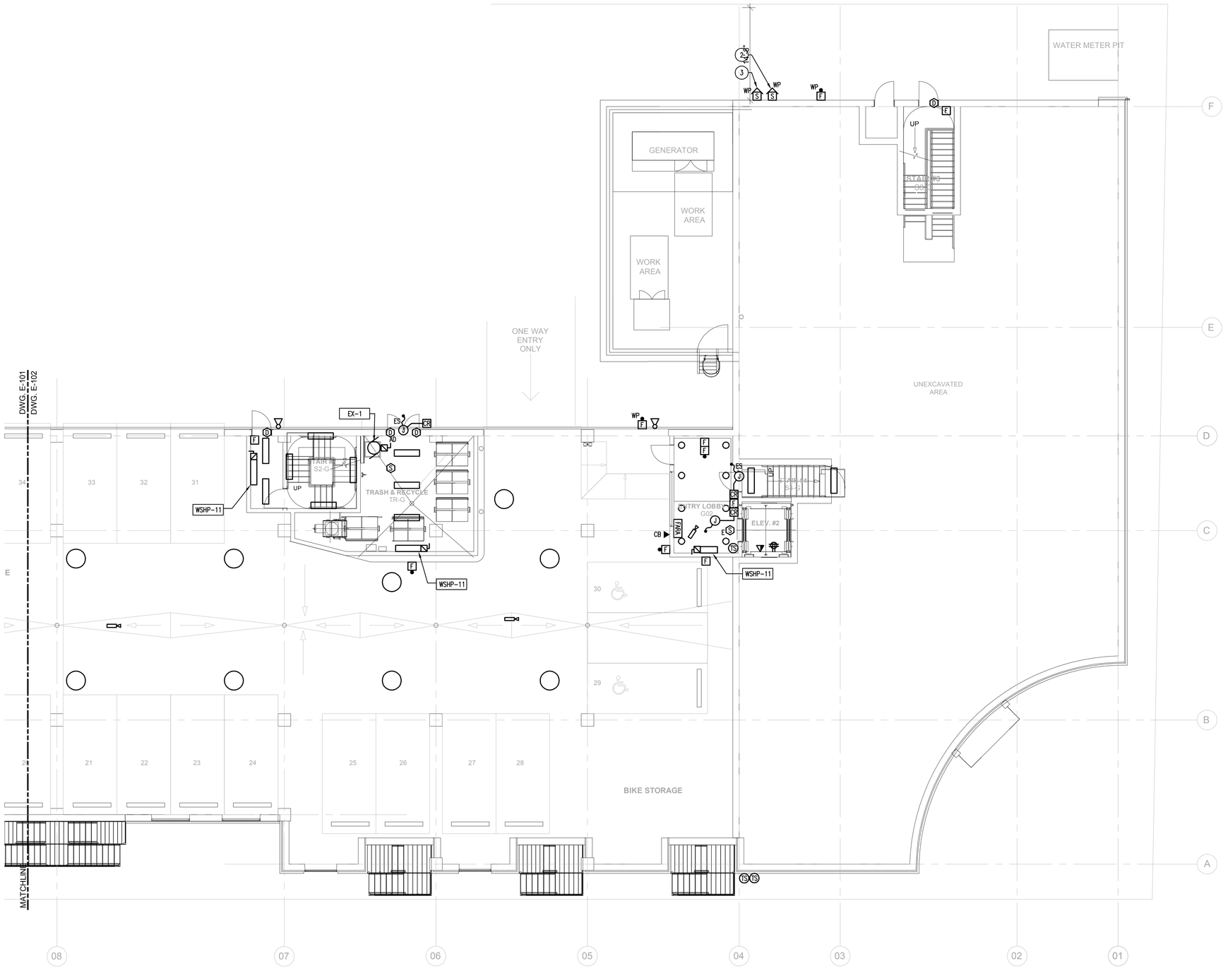

1 **GROUND LEVEL PLAN (SOUTH WING) - ELECTRICAL**
SCALE: 1/8"=1'-0"

PROJECT NORTH

Washington Village Phase 1

20 Day Street Building B

Norwalk, CT

Trinity Washington Village Limited Partnership
&
the Norwalk Housing Authority

E-ICON ARCHITECTURE
101 SUMMER ST BOSTON MA 02110
617-451-3333 www.iconarch.com

CONSULTANT
CENTEK engineering
Centered on Solutions ℠
www.CentekEng.com
(203) 488-0580
(203) 488-8587 Fax
63-2 North Branford Road, Branford, CT 06405

STAMP



KEYPLAN

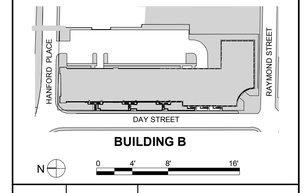

MARK	DATE	DESCRIPTION
	09-15-2014	PERMIT/ PRICING
	06-13-2014	PRICING
	11-18-2013	40% CHFA
	09-19-2013	CAM/ SPECIAL PERMIT

PROJECT NO.: 21222/CENTEK #13232.02
DRAWN BY: TJB
CHECKED BY: CKD

SHEET TITLE

BUILDING B GROUND LEVEL PLAN (SOUTH WING) - ELECTRICAL

E-102

J:\Jobs\1323202.ME\ELEC\E-101 & E-102.dwg Sep 17, 2014 - 10:05pm tgk

ELECTRICAL WORK NOTES

(1) ALL STAIRWELL ELECTRIC DOOR STRIKES SHALL BE ON SAME CIRCUIT FOR ENTIRE STAIRWELL AS SHOWN. AND SHALL BE TIRED TO FIRE ALARM SYSTEM TO UNLOCK ON ALARM.

GENERAL NOTE:

1. COORDINATE ALL WORK WITH ALL OTHER TRADES. REFER TO OTHER TRADE'S DRAWINGS FOR ADDITIONAL INFORMATION.
2. FIRE ALARM DEVICES SHOWN TYPICAL.
3. LIGHTING SHOWN TYPICAL.

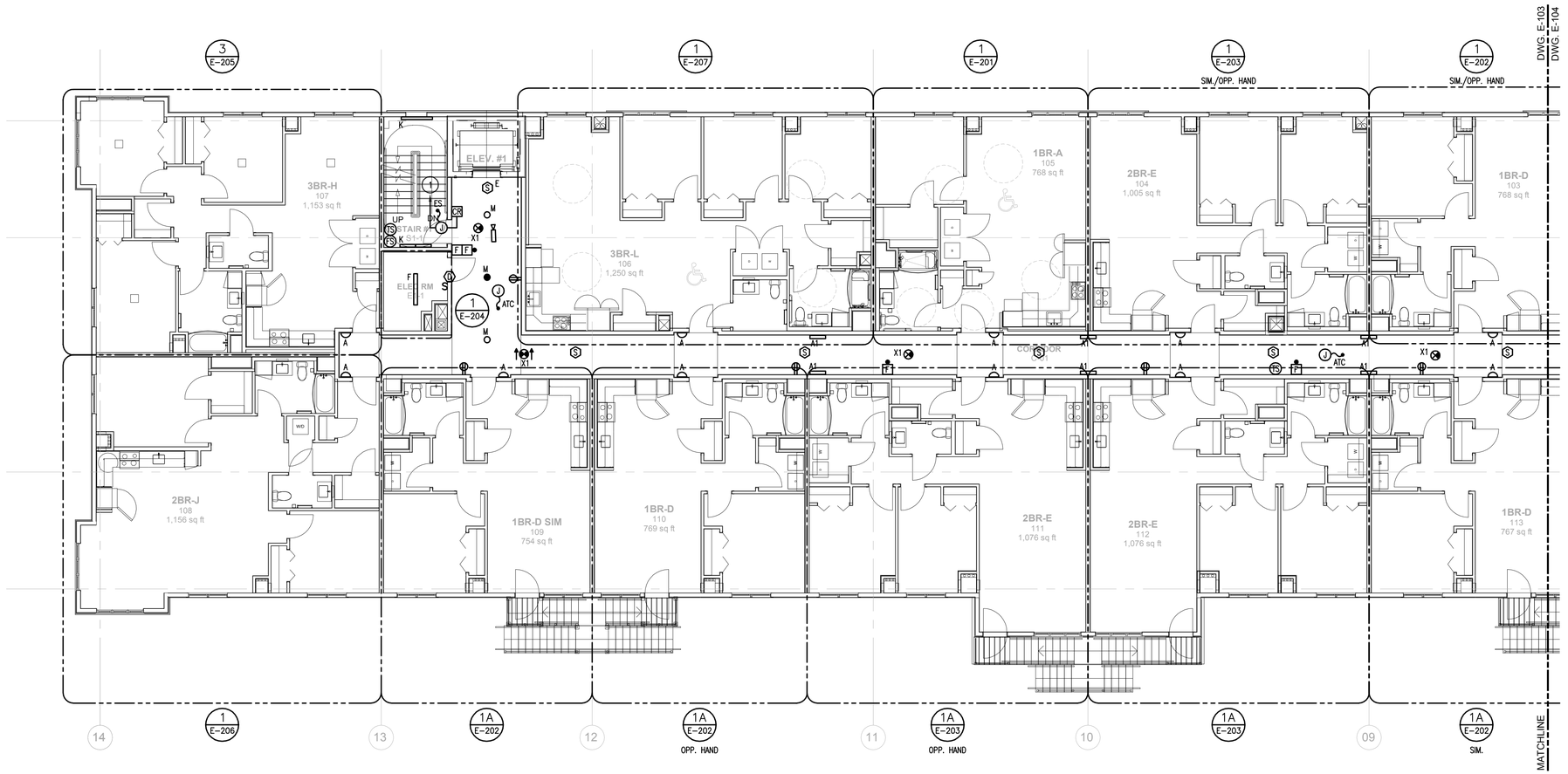

1 **FIRST FLOOR PLAN (NORTH WING) - ELECTRICAL**
SCALE: 1/8"=1'-0"

PROJECT NORTH

Washington Village Phase 1

20 Day Street Building B

Norwalk, CT

Trinity Washington Village Limited Partnership
&
the Norwalk Housing Authority

E-ICON ARCHITECTURE
101 SUMMER ST BOSTON MA 02110
617-451-3333 www.iconarch.com

CONSULTANT
CENTEK engineering
Centered on Solutions ℠
www.CentekEng.com
(203) 488-0580
(203) 488-8587 Fax
63-2 North Branford Road, Branford, CT 06405

STAMP

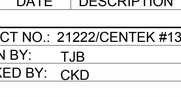

KEYPLAN

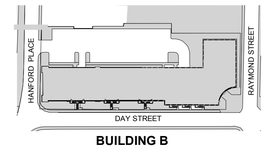

MARK	DATE	DESCRIPTION
	09-15-2014	PERMIT/ PRICING
	06-13-2014	PRICING
	11-18-2013	40% CHFA
	09-19-2013	CAM/ SPECIAL PERMIT

PROJECT NO.: 21222/CENTEK #13232.02
DRAWN BY: TJB
CHECKED BY: CKD

SHEET TITLE

BUILDING B
FIRST FLOOR
PLAN (NORTH WING) -
ELECTRICAL

E-103

J:\Jobs\1323202.ME\ELEC\E-103 & E-104.dwg Sep 17, 2014 - 10:06pm tgk

ELECTRICAL WORK NOTES

1. ALL STAIRWELL ELECTRIC DOOR STRIKES SHALL BE ON SAME CIRCUIT FOR ENTIRE STAIRWELL AS SHOWN. AND SHALL BE TIRED TO FIRE ALARM SYSTEM TO UNLOCK ON ALARM.
2. REMOTE DOOR RELEASE BUTTON.
3. SECURITY PANEL.
4. INTERCOMM PANEL.

GENERAL NOTE:

1. COORDINATE ALL WORK WITH ALL OTHER TRADES. REFER TO OTHER TRADE'S DRAWINGS FOR ADDITIONAL INFORMATION.
2. FIRE ALARM DEVICES SHOWN TYPICAL.
3. LIGHTING SHOWN TYPICAL.

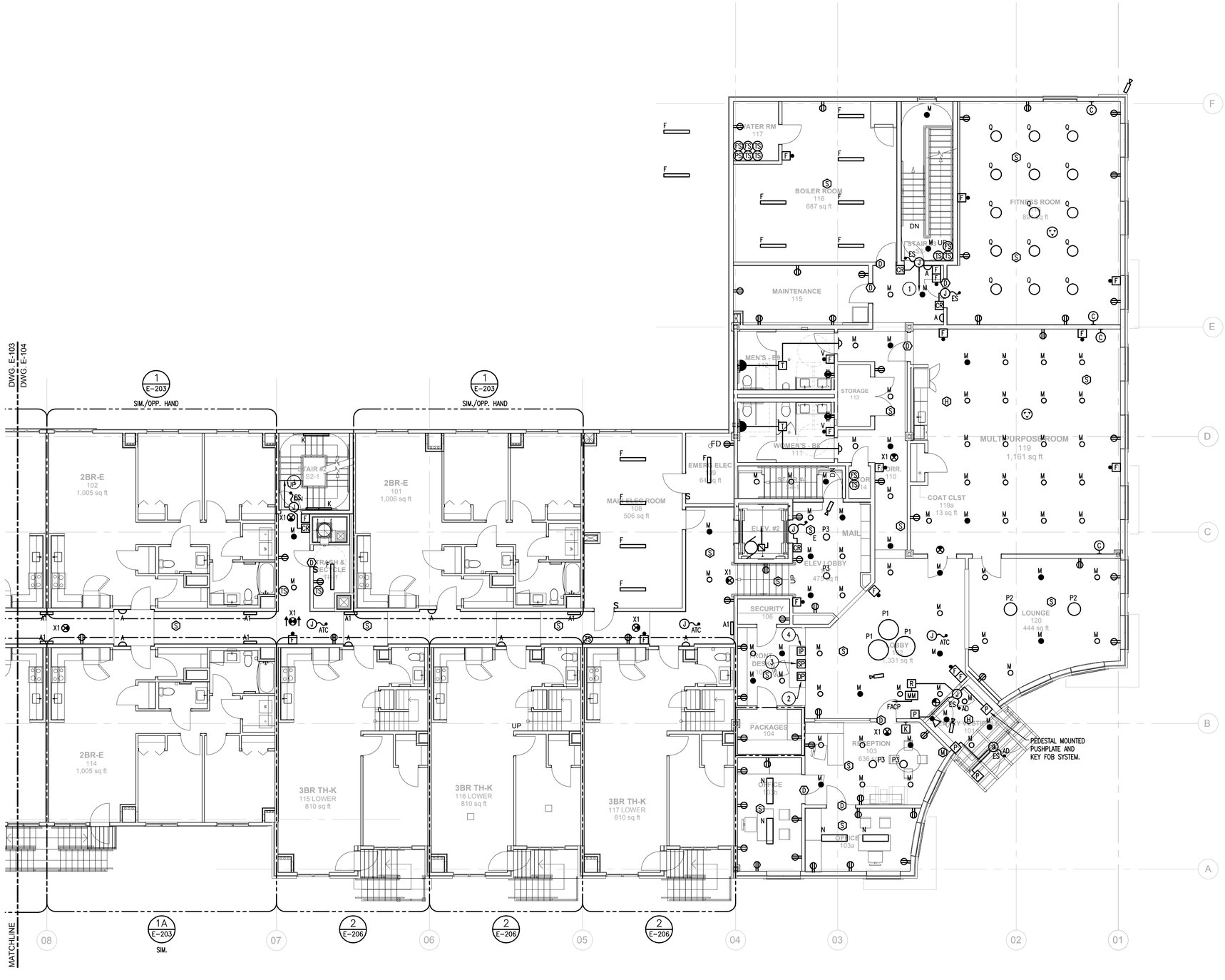

1 FIRST FLOOR PLAN (SOUTH WING) - ELECTRICAL
SCALE: 1/8"=1'-0"

PROJECT NORTH

Washington Village Phase 1

20 Day Street Building B

Norwalk, CT

Trinity Washington Village Limited Partnership
&
the Norwalk Housing Authority

E-ICON ARCHITECTURE
101 SUMMER ST BOSTON MA 02110
617-451-3333 www.iconarch.com

CONSULTANT
CENTEK engineering
Centered on Solutions ℠
www.CentekEng.com
(203) 488-0580
(203) 488-8587 Fax
63-2 North Branford Road, Branford, CT 06405

STAMP

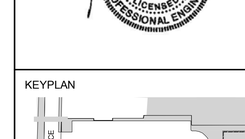

KEYPLAN

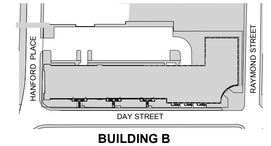

MARK	DATE	DESCRIPTION
	09-19-2013	CAM/ SPECIAL PERMIT
	11-18-2013	40% CHFA
	06-13-2014	PRICING
	09-15-2014	PERMIT/ PRICING

PROJECT NO.: 21222/CENTEK #13232.02
DRAWN BY: TJB
CHECKED BY: CKD

SHEET TITLE

BUILDING B
FIRST FLOOR
PLAN (SOUTH WING) -
ELECTRICAL

E-104

J:\Jobs\13232.02\ME\ELEC\E-103 & E-104.dwg Sep 17, 2014 - 10:06pm tgk

ELECTRICAL WORK NOTES

(1) ALL STAIRWELL ELECTRIC DOOR STRIKES SHALL BE ON SAME CIRCUIT FOR ENTIRE STAIRWELL AS SHOWN. AND SHALL BE TIRED TO FIRE ALARM SYSTEM TO UNLOCK ON ALARM.

GENERAL NOTE:

1. COORDINATE ALL WORK WITH ALL OTHER TRADES. REFER TO OTHER TRADE'S DRAWINGS FOR ADDITIONAL INFORMATION.
2. FIRE ALARM DEVICES SHOWN TYPICAL.
3. LIGHTING SHOWN TYPICAL.

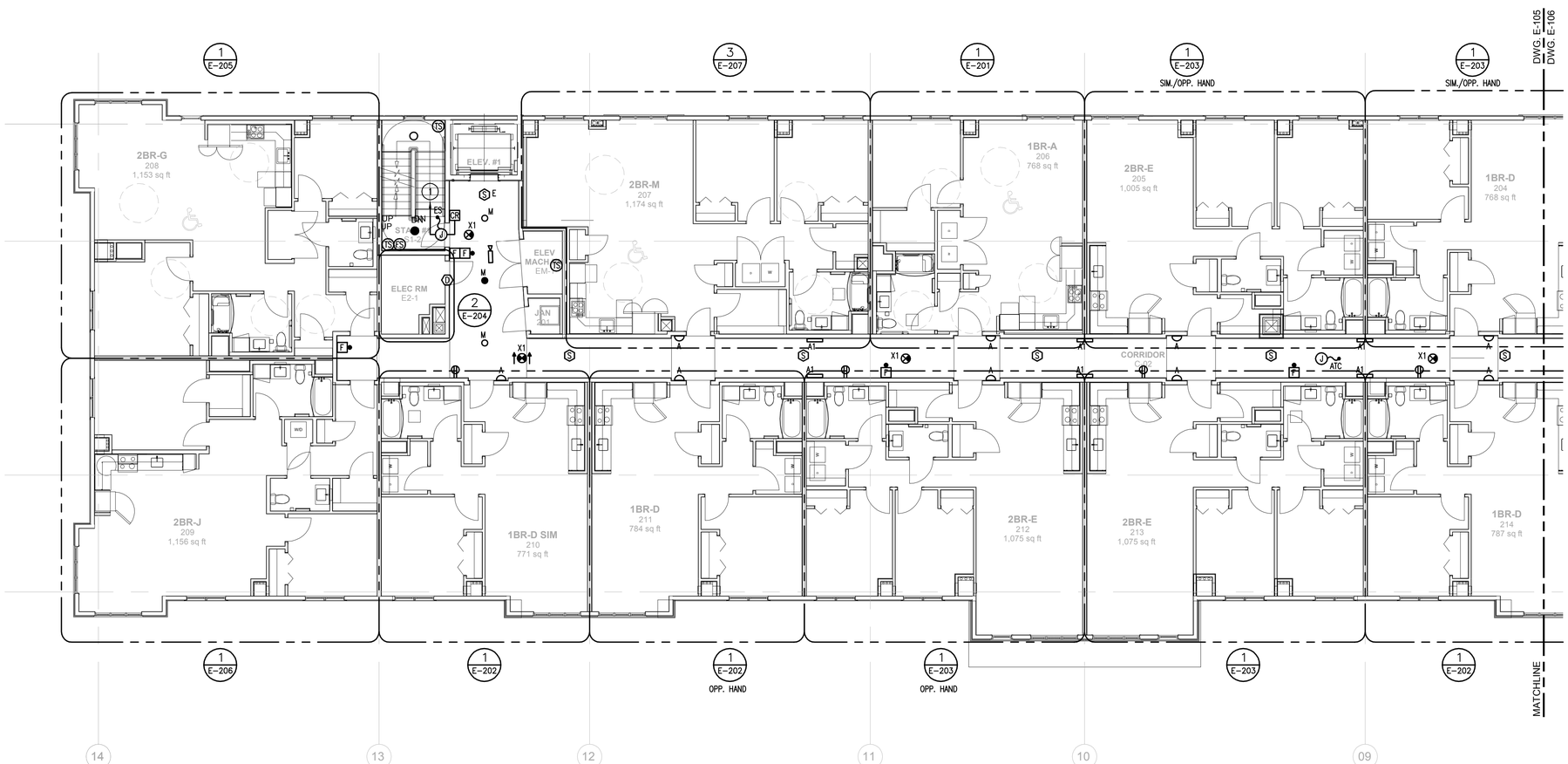

1 **SECOND FLOOR PLAN (NORTH WING) - ELECTRICAL**
SCALE: 1/8"=1'-0"

PROJECT NORTH

Washington Village Phase 1

20 Day Street Building B

Norwalk, CT

Trinity Washington Village Limited Partnership
&
the Norwalk Housing Authority

E-ICON ARCHITECTURE
101 SUMMER ST BOSTON MA 02110
617-451-3333 www.iconarch.com

CONSULTANT
CENTEK engineering
Centered on Solutions ℠
www.CentekEng.com
(203) 488-0580
(203) 488-8587 Fax
63-2 North Branford Road, Branford, CT 06405

STAMP



KEYPLAN

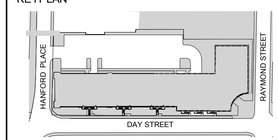

MARK	DATE	DESCRIPTION
	09-15-2014	PERMIT/ PRICING
	06-13-2014	PRICING
	11-18-2013	40% CHFA
	09-19-2013	CAM/ SPECIAL PERMIT

PROJECT NO.: 21222/CENTEK #13232.02
DRAWN BY: TJB
CHECKED BY: CKD

SHEET TITLE

BUILDING B
SECOND FLOOR
PLAN (NORTH WING) -
ELECTRICAL

E-105

J:\jobs\1323202.ME\ELEC\E-105 & E-106.dwg Sep 17, 2014 - 10:06pm tgk

ELECTRICAL WORK NOTES

1. ALL STAIRWELL ELECTRIC DOOR STRIKES SHALL BE ON SAME CIRCUIT FOR ENTIRE STAIRWELL AS SHOWN. AND SHALL BE TIRED TO FIRE ALARM SYSTEM TO UNLOCK ON ALARM.

GENERAL NOTE:

1. COORDINATE ALL WORK WITH ALL OTHER TRADES. REFER TO OTHER TRADE'S DRAWINGS FOR ADDITIONAL INFORMATION.
2. FIRE ALARM DEVICES SHOWN TYPICAL.
3. LIGHTING SHOWN TYPICAL.

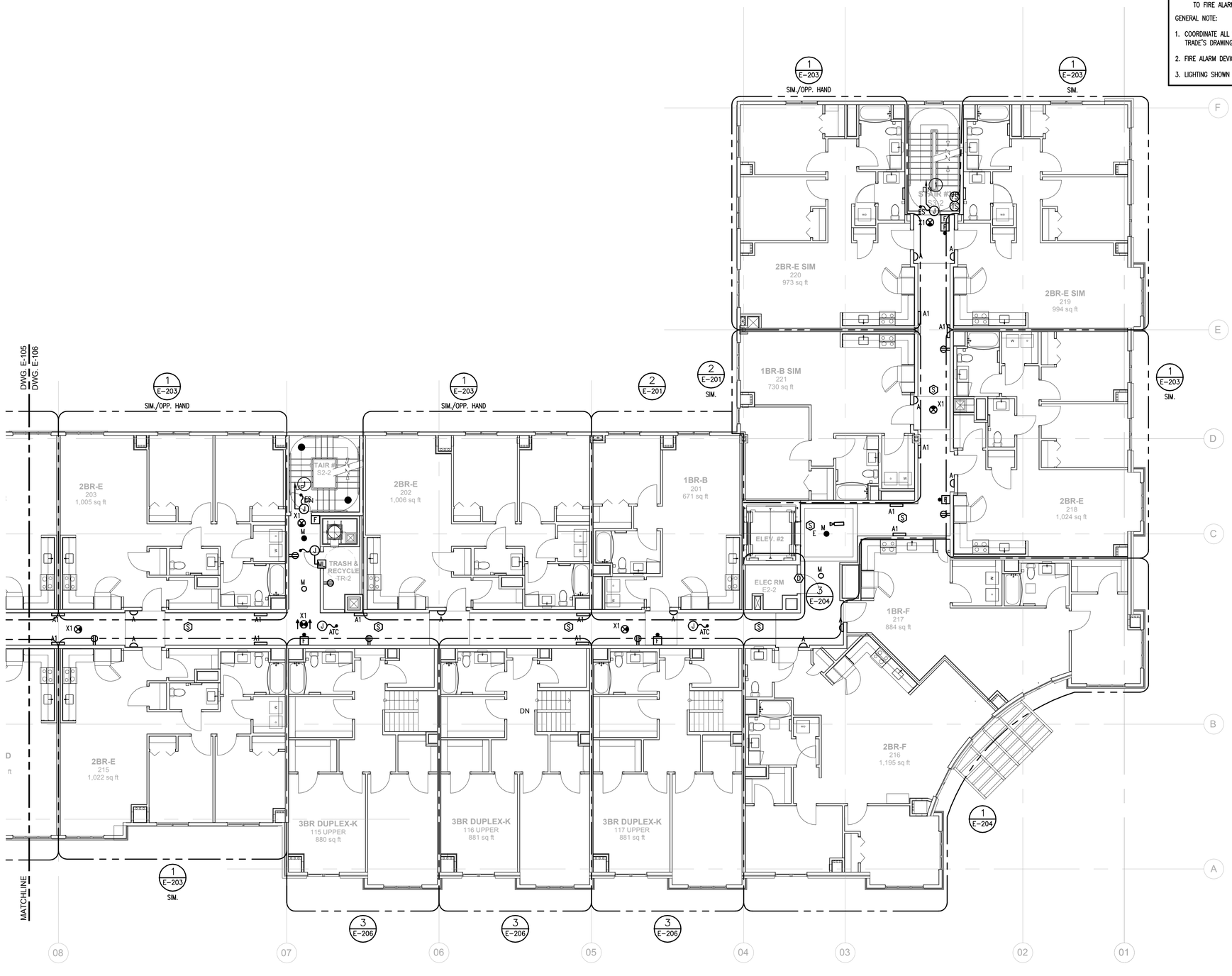

1 **SECOND FLOOR PLAN (SOUTH WING) - ELECTRICAL**
SCALE: 1/8"=1'-0"

PROJECT NORTH

Washington Village Phase 1

20 Day Street Building B

Norwalk, CT

Trinity Washington Village Limited Partnership
&
the Norwalk Housing Authority

E-ICON ARCHITECTURE
101 SUMMER ST BOSTON MA 02110
617-451-3333 www.iconarch.com

CONSULTANT
CENTEK engineering
Centered on Solutions ℠
www.CentekEng.com
(203) 488-0580
(203) 488-8587 Fax
63-2 North Branford Road, Branford, CT 06405

STAMP

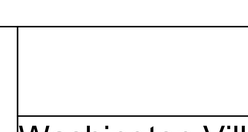

KEYPLAN

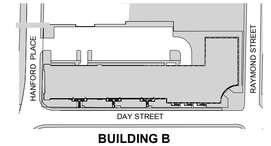

MARK	DATE	DESCRIPTION
	09-15-2014	PERMIT/ PRICING
	06-13-2014	PRICING
	11-18-2013	40% CHFA
	09-19-2013	CAM/ SPECIAL PERMIT

PROJECT NO.:	21222/CENTEK #13232.02
DRAWN BY:	TJB
CHECKED BY:	CKD

SHEET TITLE

BUILDING B SECOND FLOOR PLAN (SOUTH WING) - ELECTRICAL

E-106

J:\Jobs\13232.ME\ELEC\E-105 & E-106.dwg Sep 17, 2014 - 10:07pm tgk

ELECTRICAL WORK NOTES

(1) ALL STAIRWELL ELECTRIC DOOR STRIKES SHALL BE ON SAME CIRCUIT FOR ENTIRE STAIRWELL AS SHOWN. AND SHALL BE WIRED TO FIRE ALARM SYSTEM TO UNLOCK ON ALARM.

GENERAL NOTE:

1. COORDINATE ALL WORK WITH ALL OTHER TRADES. REFER TO OTHER TRADE'S DRAWINGS FOR ADDITIONAL INFORMATION.
2. FIRE ALARM DEVICES SHOWN TYPICAL.
3. LIGHTING SHOWN TYPICAL.

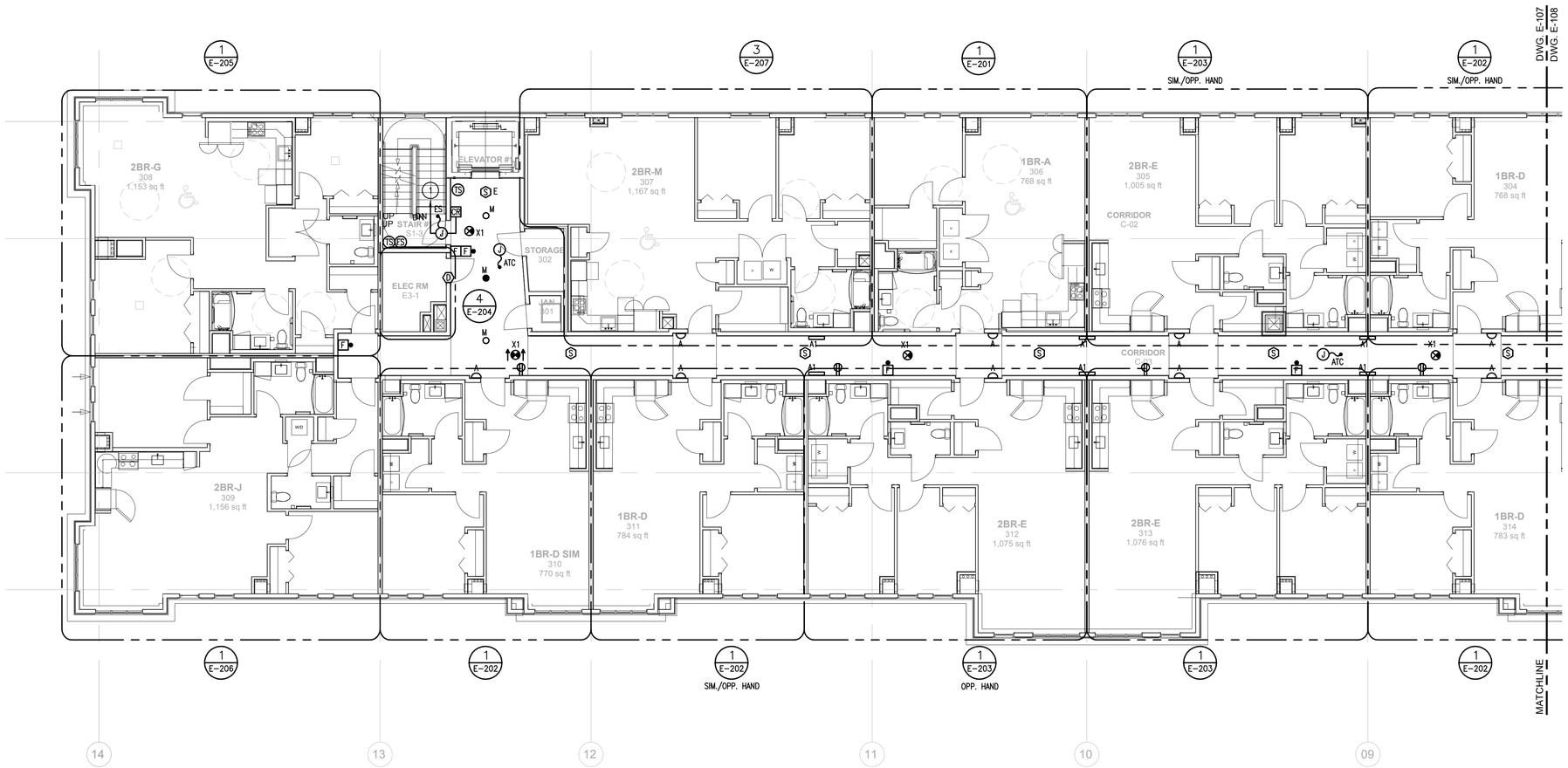

1 **THIRD FLOOR PLAN (NORTH WING) - ELECTRICAL**
SCALE: 1/8"=1'-0"

PROJECT NORTH

Washington Village Phase 1

20 Day Street Building B

Norwalk, CT

Trinity Washington Village Limited Partnership
&
the Norwalk Housing Authority

E-ICON ARCHITECTURE
101 SUMMER ST BOSTON MA 02110
617-451-3333 www.iconarch.com

CONSULTANT
CENTEK engineering
Centered on Solutions ℠
www.CentekEng.com
(203) 488-0580
(203) 488-8587 Fax
63-2 North Branford Road, Branford, CT 06405

STAMP



KEYPLAN

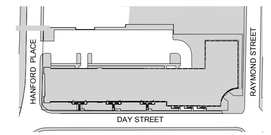

MARK	DATE	DESCRIPTION
	09-15-2014	PERMIT/ PRICING
	06-13-2014	PRICING
	11-18-2013	40% CHFA
	09-19-2013	CAM/ SPECIAL PERMIT

PROJECT NO.: 21222/CENTEK #13232.02
DRAWN BY: TJB
CHECKED BY: CKD

SHEET TITLE

BUILDING B
THIRD FLOOR
PLAN (NORTH WING) -
ELECTRICAL

E-107

J:\Jobs\13232.ME\ELEC\E-107 & E-108.dwg Sep 17, 2014 - 10:07pm tgk

ELECTRICAL WORK NOTES

1. ALL STAIRWELL ELECTRIC DOOR STRIKES SHALL BE ON SAME CIRCUIT FOR ENTIRE STAIRWELL AS SHOWN. AND SHALL BE WIRED TO FIRE ALARM SYSTEM TO UNLOCK ON ALARM.

GENERAL NOTE:

1. COORDINATE ALL WORK WITH ALL OTHER TRADES. REFER TO OTHER TRADE'S DRAWINGS FOR ADDITIONAL INFORMATION.
2. FIRE ALARM DEVICES SHOWN TYPICAL.
3. LIGHTING SHOWN TYPICAL.

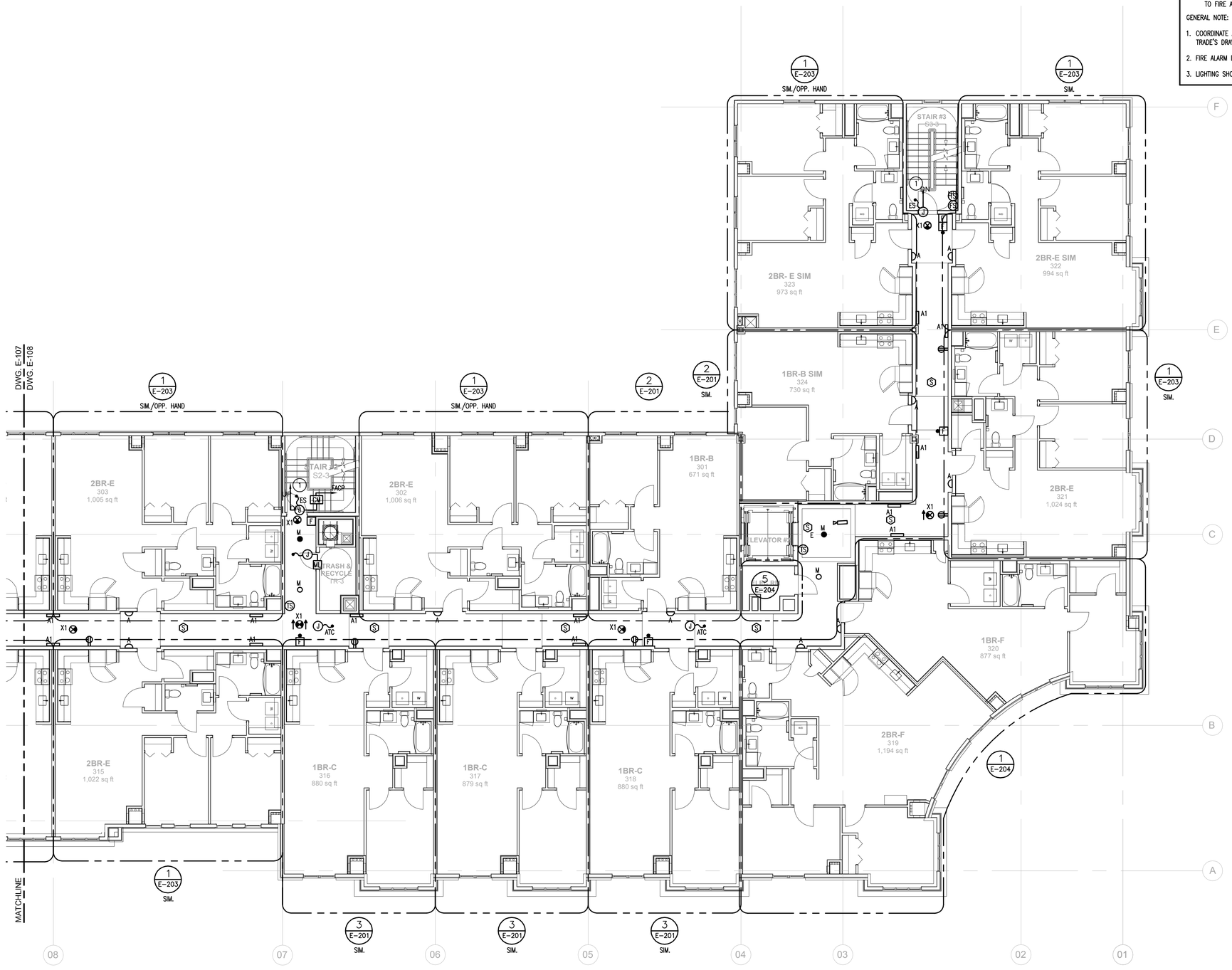

1 THIRD FLOOR PLAN (SOUTH WING) - ELECTRICAL
SCALE: 1/8"=1'-0"

PROJECT NORTH

Washington Village Phase 1

20 Day Street Building B

Norwalk, CT

Trinity Washington Village Limited Partnership
&
the Norwalk Housing Authority

E-ICON ARCHITECTURE
101 SUMMER ST BOSTON MA 02110
617-451-3333 www.iconarch.com

CONSULTANT
CENTEK engineering
Centered on Solutions ℠
www.CentekEng.com
(203) 488-0580
(203) 488-8587 Fax
63-2 North Branford Road, Branford, CT 06405

STAMP

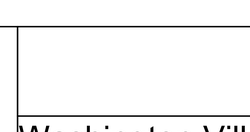

KEYPLAN

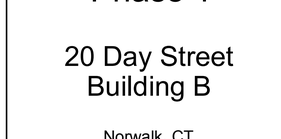

MARK	DATE	DESCRIPTION
	09-15-2014	PERMIT/ PRICING
	06-13-2014	PRICING
	11-18-2013	40% CHFA
	09-19-2013	CAM/ SPECIAL PERMIT

PROJECT NO.: 21222/CENTEK #13232.02
DRAWN BY: TJB
CHECKED BY: CKD

SHEET TITLE

BUILDING B
THIRD FLOOR
PLAN (SOUTH WING) -
ELECTRICAL

E-108

J:\Jobs\13232.02.ME\ELEC\E-107 & E-108.dwg Sep 17, 2014 - 10:08pm tgk

ELECTRICAL WORK NOTES

1. ALL STAIRWELL ELECTRIC DOOR STRIKES SHALL BE ON SAME CIRCUIT FOR ENTIRE STAIRWELL AS SHOWN, AND SHALL BE WIRED TO FIRE ALARM SYSTEM TO UNLOCK ON ALARM.
2. COOLING TOWER POWER/CONTROL PANEL. COORDINATE LOCATION WITH MECHANICAL CONTRACTOR.

GENERAL NOTE:

1. COORDINATE ALL WORK WITH ALL OTHER TRADES. REFER TO OTHER TRADE'S DRAWINGS FOR ADDITIONAL INFORMATION.
2. FIRE ALARM DEVICES SHOWN TYPICAL.
3. LIGHTING SHOWN TYPICAL.



1 FOURTH FLOOR PLAN (SOUTH WING) - ELECTRICAL
SCALE: 1/8"=1'-0"

PROJECT NORTH

Washington Village Phase 1

20 Day Street Building B

Norwalk, CT

Trinity Washington Village Limited Partnership
&
the Norwalk Housing Authority

E-ICON ARCHITECTURE
101 SUMMER ST BOSTON MA 02110
617-451-3333 www.iconarch.com

CONSULTANT
CENTEK engineering
Centered on Solutions ℠
www.CentekEng.com
(203) 488-0580
(203) 488-8587 Fax
63-2 North Branford Road, Branford, CT 06405

STAMP



KEYPLAN

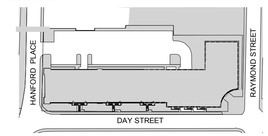

MARK	DATE	DESCRIPTION
	09-19-2013	CAM/ SPECIAL PERMIT
	11-18-2013	40% CHFA
	06-13-2014	PRICING
	09-15-2014	PERMIT/ PRICING

PROJECT NO.: 21222/CENTEK #13232.02
DRAWN BY: TJB
CHECKED BY: CKD

SHEET TITLE

BUILDING B
FOURTH FLOOR
PLAN (SOUTH WING) -
ELECTRICAL

E-109

J:\jobs\1323202.ME\ELEC\E-109.dwg Sep 17, 2014 - 10:08pm tgk

ELECTRICAL WORK NOTES

1. (2) #4 AWG, (1) #4 AWG GND, 1"C. TO DEDICATED 30A, 2P, CIRCUIT BREAKER IN ASSOCIATED UNIT ELECTRIC PANEL. CONDUIT SHALL BE ROUTED ACROSS ROOF ON SLEEPERS.
2. REFER TO MECHANICAL PLANS FOR CIRCUIT REQUIREMENTS FOR ERV UNITS AND EXHAUST FANS. PROVIDE CIRCUIT AND WIRING FROM PANEL EQ.

GENERAL NOTE:

1. COORDINATE ALL WORK WITH ALL OTHER TRADES. REFER TO OTHER TRADE'S DRAWINGS FOR ADDITIONAL INFORMATION.

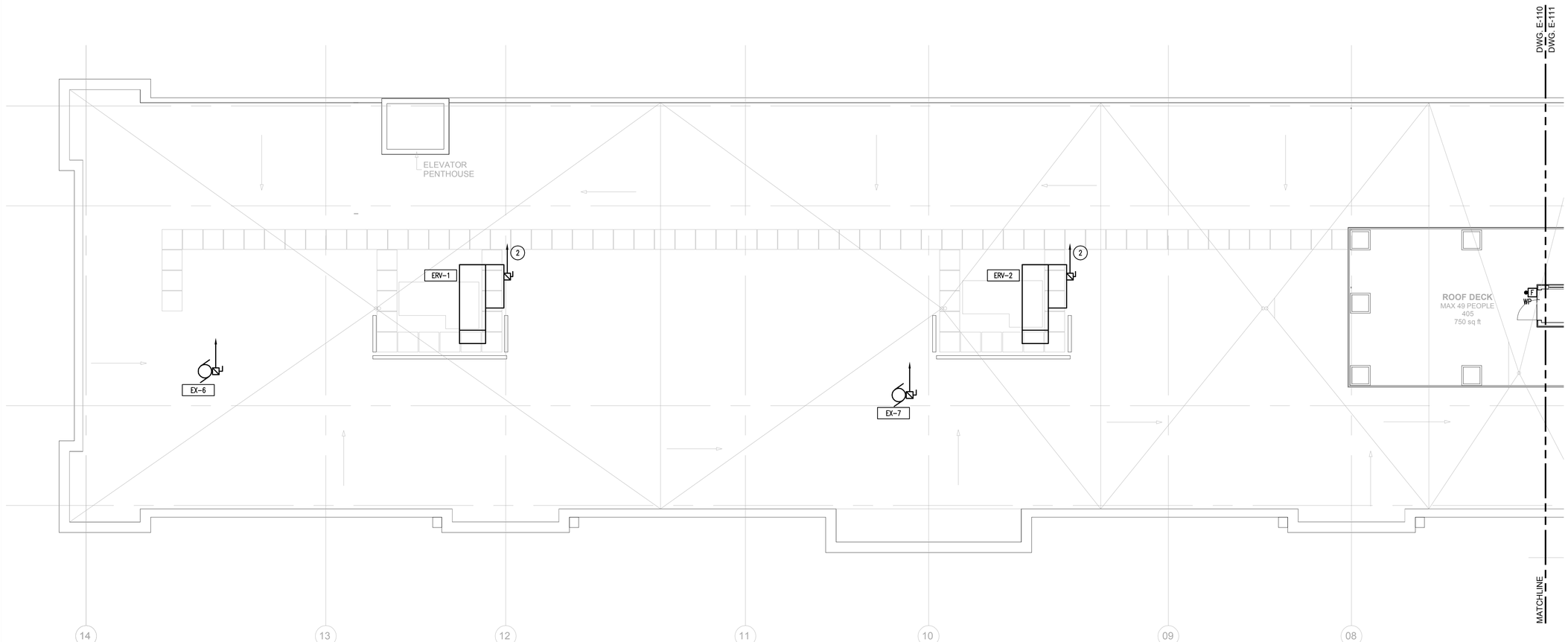

1 **ROOF PLAN (NORTH WING) - ELECTRICAL**
SCALE: 1/8"=1'-0"

PROJECT NORTH

Washington Village Phase 1

20 Day Street Building B

Norwalk, CT

Trinity Washington Village Limited Partnership
&
the Norwalk Housing Authority

E-ICON ARCHITECTURE
101 SUMMER ST BOSTON MA 02110
617-451-3333 www.iconarch.com

CONSULTANT
CENTEK engineering
Centered on Solutions ℠
www.CentekEng.com
(203) 488-0580
(203) 488-8587 Fax
63-2 North Branford Road, Branford, CT 06405

STAMP



KEYPLAN

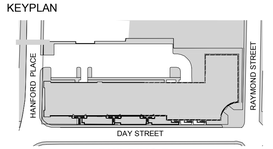

MARK	DATE	DESCRIPTION
	09-15-2014	PERMIT/ PRICING
	06-13-2014	PRICING
	11-18-2013	40% CHFA
	09-19-2013	CAM/ SPECIAL PERMIT

PROJECT NO.: 21222/CENTEK #13232.02
DRAWN BY: TJB
CHECKED BY: CKD

SHEET TITLE

BUILDING B
ROOF PLAN (NORTH WING) - ELECTRICAL

E-110

J:\Jobs\1323202.ME\ELEC\E-110 & E-111.dwg Sep 17, 2014 - 10:09pm tgk

ELECTRICAL WORK NOTES

1. (2) #4 AWG, (1) #4 AWG GND, 1"C. TO DEDICATED 30A, 2P, CIRCUIT BREAKER IN ASSOCIATED UNIT ELECTRIC PANEL. CONDUIT SHALL BE ROUTED ACROSS ROOF ON SLEEPERS.
2. REFER TO MECHANICAL PLANS FOR CIRCUIT REQUIREMENTS FOR ERV UNITS AND EXHAUST FANS. PROVIDE CIRCUIT AND WIRING FROM PANEL EQ.

GENERAL NOTE:

1. COORDINATE ALL WORK WITH ALL OTHER TRADES. REFER TO OTHER TRADE'S DRAWINGS FOR ADDITIONAL INFORMATION.

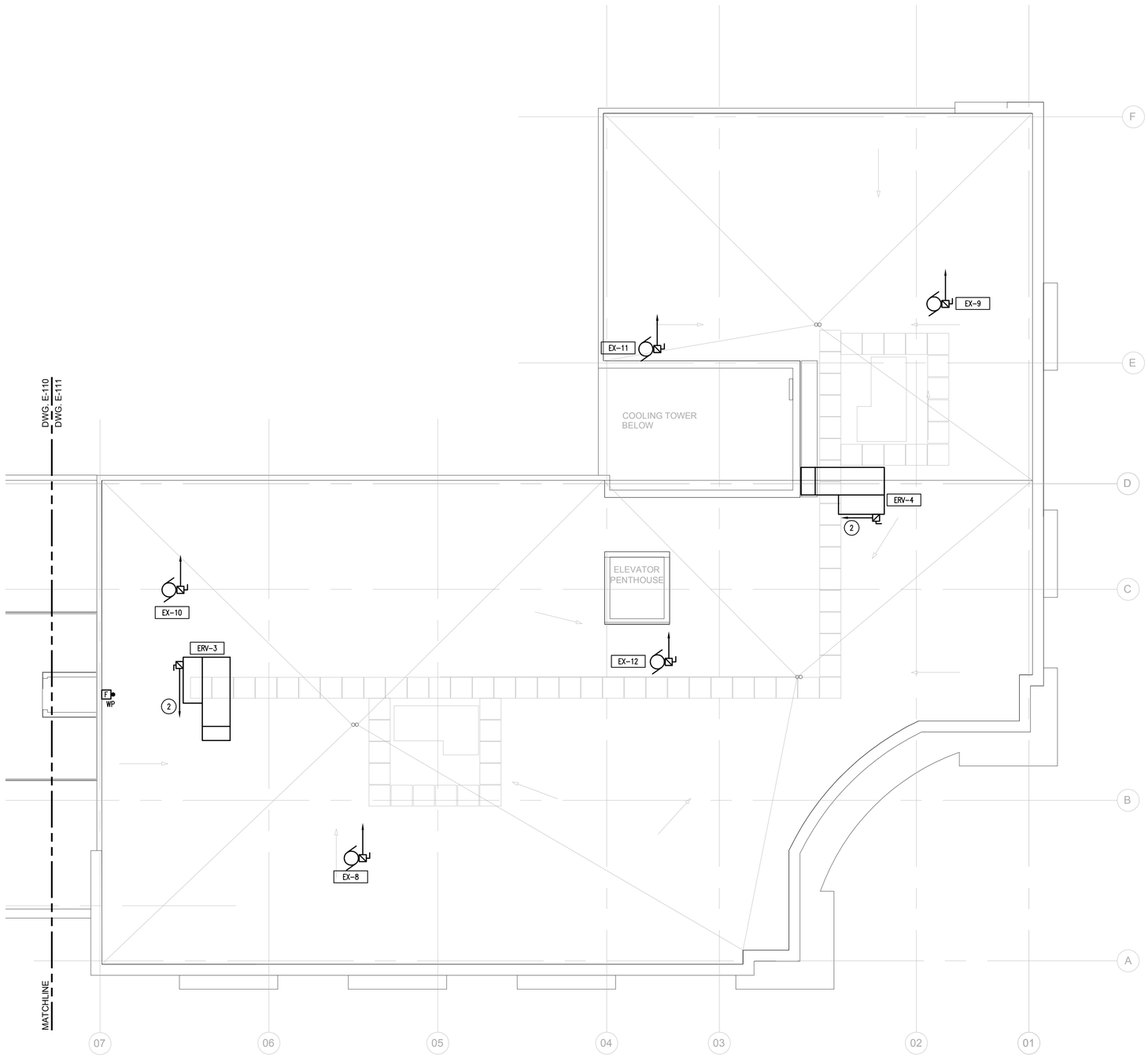

1 ROOF PLAN (SOUTH WING) - ELECTRICAL
SCALE: 1/8"=1'-0"

PROJECT NORTH

Washington Village Phase 1

20 Day Street Building B

Norwalk, CT

Trinity Washington Village Limited Partnership
&
the Norwalk Housing Authority

E-ICON ARCHITECTURE
101 SUMMER ST BOSTON MA 02110
617-451-3333 www.iconarch.com

CONSULTANT
CENTEK engineering
Centered on Solutions ℠
www.CentekEng.com
(203) 488-0580
(203) 488-8587 Fax
63-2 North Branford Road, Branford, CT 06405

STAMP



KEYPLAN

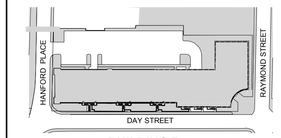

BUILDING B

N 0 4' 8' 16'

MARK	DATE	DESCRIPTION
	09-15-2014	PERMIT/ PRICING
	06-13-2014	PRICING
	11-18-2013	40% CHFA
	09-19-2013	CAM/ SPECIAL PERMIT

PROJECT NO.: 21222/CENTEK #13232.02
DRAWN BY: TJB
CHECKED BY: CKD

SHEET TITLE

BUILDING B
ROOF PLAN (SOUTH WING) - ELECTRICAL

E-111

J:\Jobs\13232\02.WE\ELEC\E-110 & E-111.dwg Sep 17, 2014 - 10:09pm tgk

ELECTRICAL WORK NOTES

1. RECEPTACLE FOR FLOOD STOP MOISTURE SENSOR.
2. WALL OVEN RECEPTACLE. REFER TO PANEL SCHEDULE.

GENERAL NOTE:

1. COORDINATE ALL WORK WITH ALL OTHER TRADES. REFER TO OTHER TRADE'S DRAWINGS FOR ADDITIONAL INFORMATION.
2. REFER TO 3 BEDROOM TOWNHOUSE UNIT FOR TYPICAL CIRCUIT ASSIGNMENTS UNLESS OTHERWISE NOTED.
3. ALL CIRCUITS IN RESIDENT UNITS ORIGINATE FROM ELECTRIC PANEL WITHIN THAT UNIT.

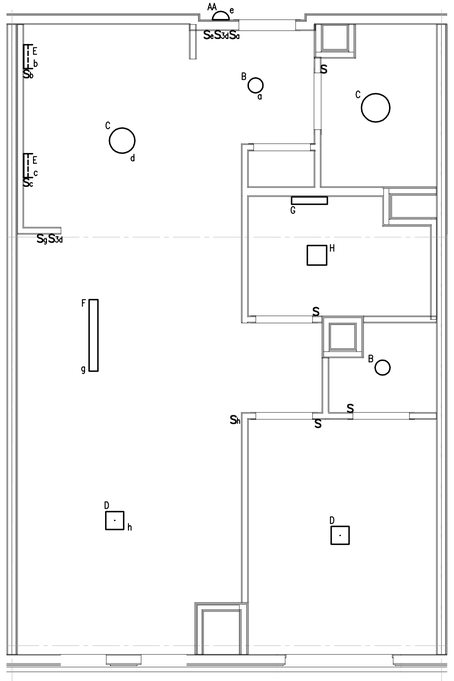

6 1BR TYPE C - ELECTRICAL LIGHTING
SCALE: 1/4"=1'-0"

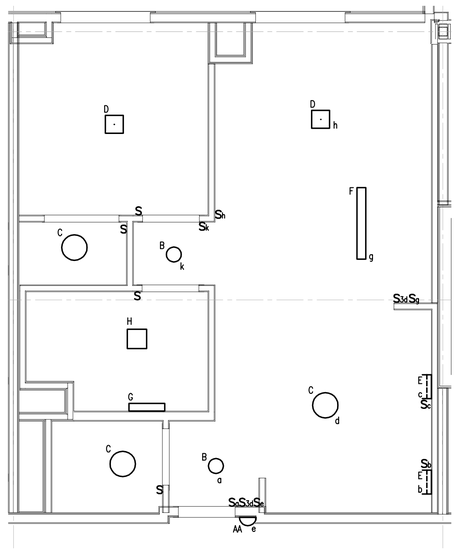

5 1BR TYPE B - ELECTRICAL LIGHTING
SCALE: 1/4"=1'-0"

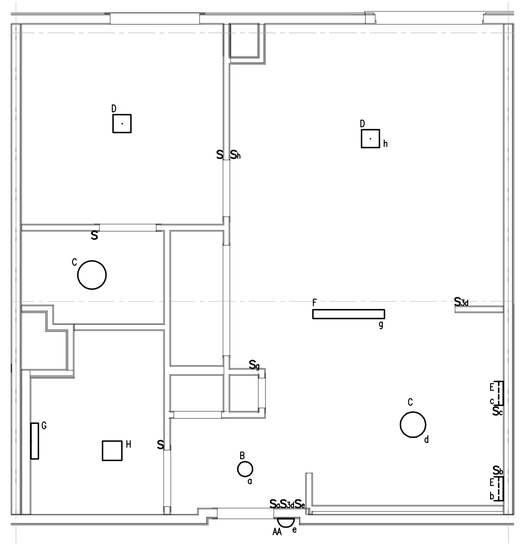

4 1BR TYPE A - ELECTRICAL LIGHTING
SCALE: 1/4"=1'-0"

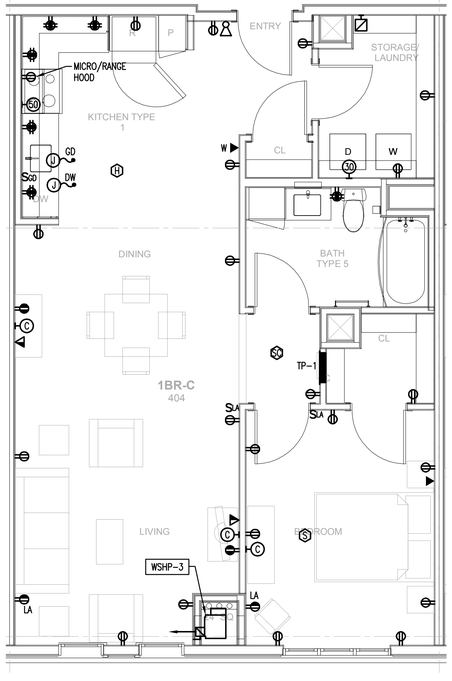

3 1BR TYPE C - ELECTRICAL POWER
SCALE: 1/4"=1'-0" ANSI TYPE B

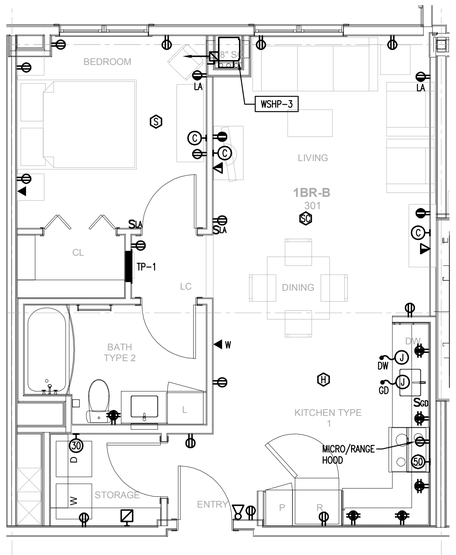

2 1BR TYPE B - ELECTRICAL POWER
SCALE: 1/4"=1'-0" ANSI TYPE B

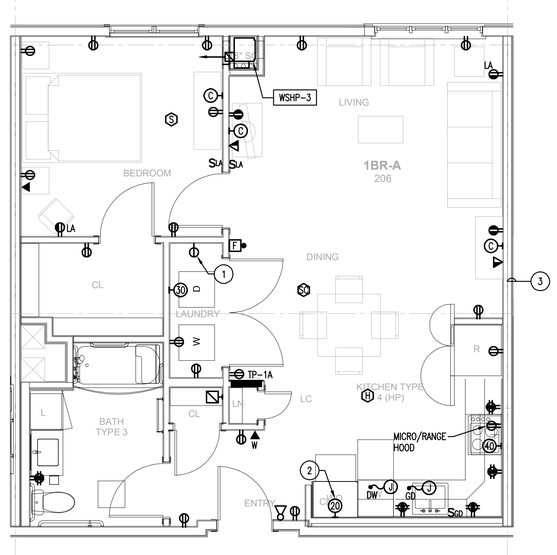

1 1BR TYPE A - ELECTRICAL POWER
SCALE: 1/4"=1'-0" ANSI TYPE A

PROJECT NORTH

Washington Village Phase 1

20 Day Street Building B

Norwalk, CT

Trinity Washington Village Limited Partnership
&
the Norwalk Housing Authority

E-ICON ARCHITECTURE
101 SUMMER ST BOSTON MA 02110
617-451-3333 www.iconarch.com

CONSULTANT
CENTEK engineering
Centered on Solutions ℠
www.CentekEng.com
(203) 488-0580
(203) 488-8587 Fax
63-2 North Branford Road, Branford, CT 06405

STAMP



KEYPLAN

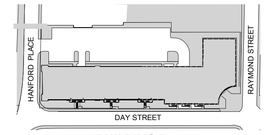

BUILDING B

MARK	DATE	DESCRIPTION
	09-15-2014	PERMIT/ PRICING
	06-13-2014	PRICING
	11-18-2013	40% CHFA
	09-19-2013	CAM/ SPECIAL PERMIT

PROJECT NO.: 21222/CENTEK #13232.02
DRAWN BY: TJB
CHECKED BY: CKD

SHEET TITLE

TYPICAL UNIT PLANS
BUILDING B
ELECTRICAL

E-201

J:\Jobs\1323202.ME\ELEC\E-201.dwg Sep 17, 2014 - 10:09pm tgk

ELECTRICAL WORK NOTES

(1) RECEPTACLE FOR FLOOD STOP MOISTURE SENSOR.

GENERAL NOTE:

1. COORDINATE ALL WORK WITH ALL OTHER TRADES. REFER TO OTHER TRADE'S DRAWINGS FOR ADDITIONAL INFORMATION.
2. REFER TO 3 BEDROOM TOWNHOUSE UNIT FOR TYPICAL CIRCUIT ASSIGNMENTS UNLESS OTHERWISE NOTED.
3. ALL CIRCUITS IN RESIDENT UNITS ORIGINATE FROM ELECTRIC PANEL WITHIN THAT UNIT.

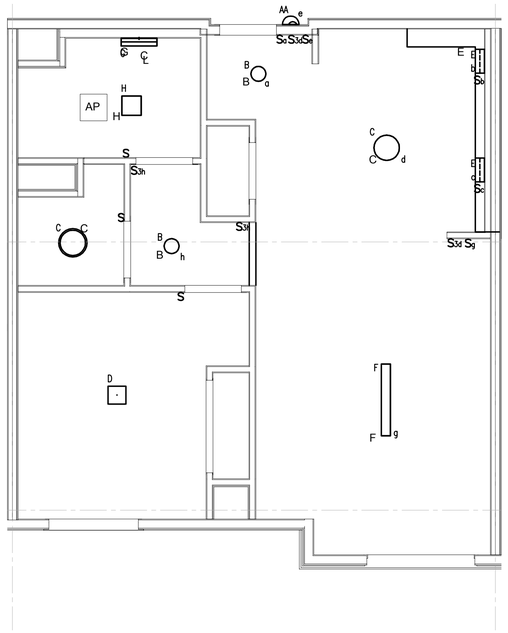

1A 1BR TYPE D - ELECTRICAL POWER/LIGHTING
SCALE: 1/4"=1'-0"

2 1BR TYPE D - ELECTRICAL LIGHTING
SCALE: 1/4"=1'-0"

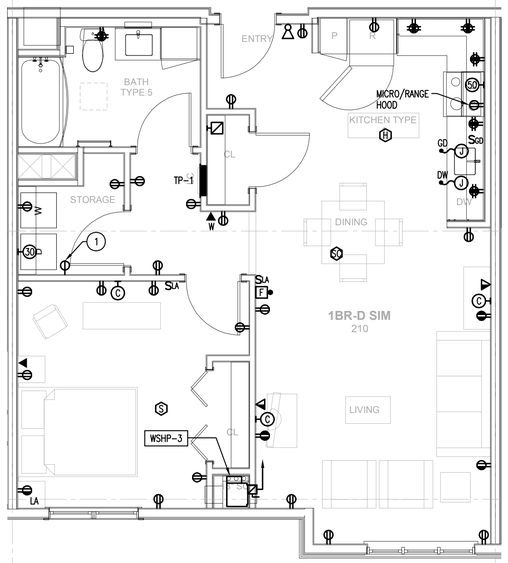

1 1BR TYPE D - ELECTRICAL POWER
SCALE: 1/4"=1'-0" ANSI TYPE B

PROJECT NORTH

Washington Village Phase 1

20 Day Street Building B

Norwalk, CT

Trinity Washington Village Limited Partnership
&
the Norwalk Housing Authority

E-ICON ARCHITECTURE
101 SUMMER ST BOSTON MA 02110
617-451-3333 www.iconarch.com

CONSULTANT
CENTEK engineering
Centered on Solutions SM
www.CentekEng.com
(203) 488-0580
(203) 488-8587 Fax
63-2 North Branford Road, Branford, CT 06405

STAMP

STATE OF CONNECTICUT FRANK R. CIOFFI No. 17006 LICENSED PROFESSIONAL ENGINEER

KEYPLAN

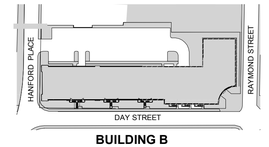

MARK	DATE	DESCRIPTION
	09-15-2014	PERMIT/ PRICING
	06-13-2014	PRICING
	11-18-2013	40% CHFA
	09-19-2013	CAM/ SPECIAL PERMIT

PROJECT NO.: 21222/CENTEK #13232.02
DRAWN BY: TJB
CHECKED BY: CKD

SHEET TITLE

TYPICAL UNIT PLANS
BUILDING B
ELECTRICAL

E-202

J:\Jobs\1323202.ME\ELEC\E-202.dwg Sep 17, 2014 - 10:10pm tgk

ELECTRICAL WORK NOTES

(1) RECEPTACLE FOR FLOOD STOP MOISTURE SENSOR.

GENERAL NOTE:

1. COORDINATE ALL WORK WITH ALL OTHER TRADES. REFER TO OTHER TRADE'S DRAWINGS FOR ADDITIONAL INFORMATION.
2. REFER TO 3 BEDROOM TOWNHOUSE UNIT FOR TYPICAL CIRCUIT ASSIGNMENTS UNLESS OTHERWISE NOTED.
3. ALL CIRCUITS IN RESIDENT UNITS ORIGINATE FROM ELECTRIC PANEL WITHIN THAT UNIT.

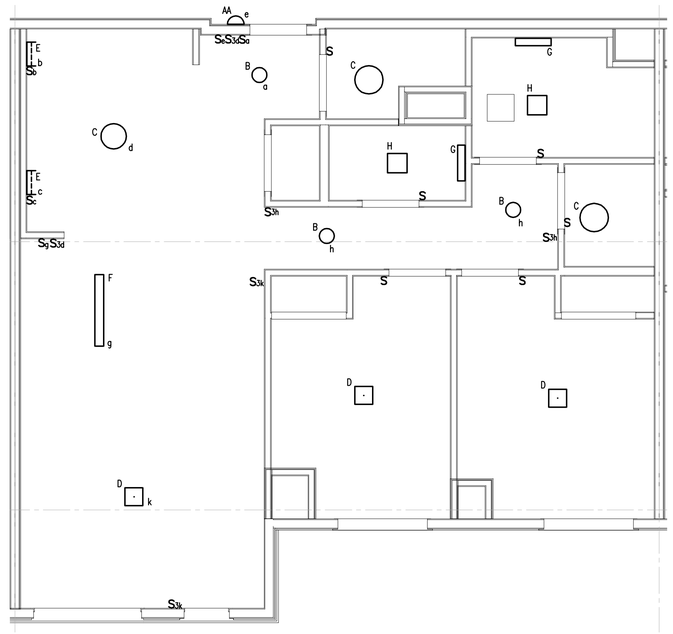

2 2BR TYPE E - ELECTRICAL LIGHTING
SCALE: 1/4"=1'-0"

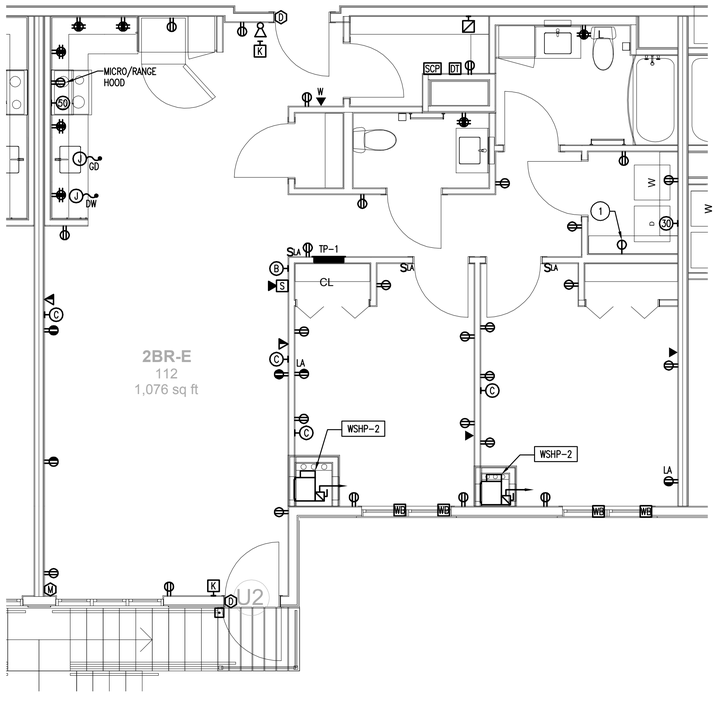

1A 2BR TYPE E - ELECTRICAL POWER
SCALE: 1/4"=1'-0"

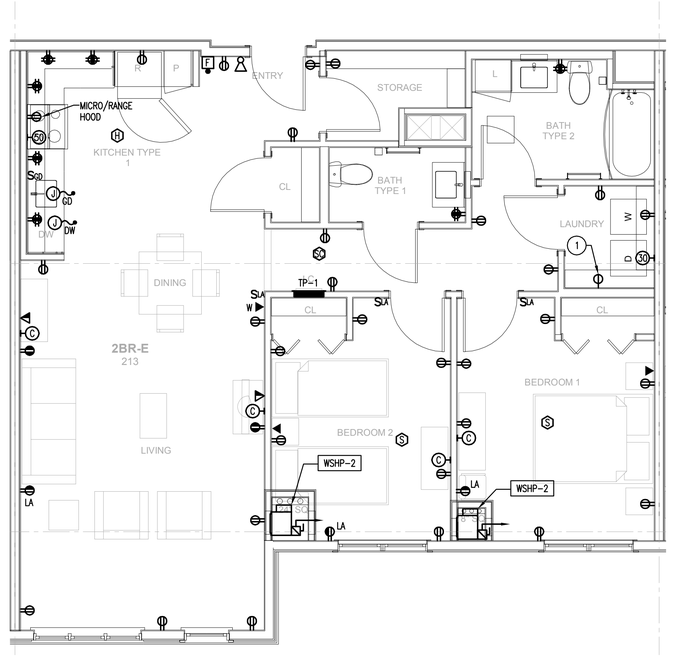

1 2BR TYPE E - ELECTRICAL POWER
SCALE: 1/4"=1'-0" ANSI TYPE B

PROJECT NORTH

Washington Village Phase 1

20 Day Street Building B

Norwalk, CT

Trinity Washington Village Limited Partnership
&
the Norwalk Housing Authority

E-ICON ARCHITECTURE
101 SUMMER ST BOSTON MA 02110
617-451-3333 www.iconarch.com

CONSULTANT
CENTEK engineering
Centered on Solutions SM
www.CentekEng.com
(203) 488-0580
(203) 488-8587 Fax
63-2 North Branford Road, Branford, CT 06405

STAMP

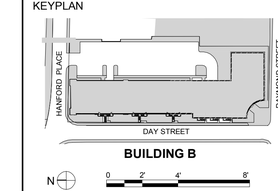

KEYPLAN

MARK	DATE	DESCRIPTION
	09-15-2014	PERMIT/ PRICING
	06-13-2014	PRICING
	11-18-2013	40% CHFA
	09-19-2013	CAM/ SPECIAL PERMIT

PROJECT NO.: 21222/CENTEK #13232.02
DRAWN BY: TJB
CHECKED BY: CKD

SHEET TITLE

TYPICAL UNIT PLANS
BUILDING B
ELECTRICAL

E-203

J:\Jobs\13232.ME\ELEC\E-203.dwg Sep 17, 2014 - 10:10pm tgk

ELECTRICAL WORK NOTES

1. RECEPTACLE FOR FLOOD STOP MOISTURE SENSOR.

GENERAL NOTE:

1. COORDINATE ALL WORK WITH ALL OTHER TRADES. REFER TO OTHER TRADE'S DRAWINGS FOR ADDITIONAL INFORMATION.
2. REFER TO 3 BEDROOM TOWNHOUSE UNIT FOR TYPICAL CIRCUIT ASSIGNMENTS UNLESS OTHERWISE NOTED.
3. ALL CIRCUITS IN RESIDENT UNITS ORIGINATE FROM ELECTRIC PANEL WITHIN THAT UNIT.

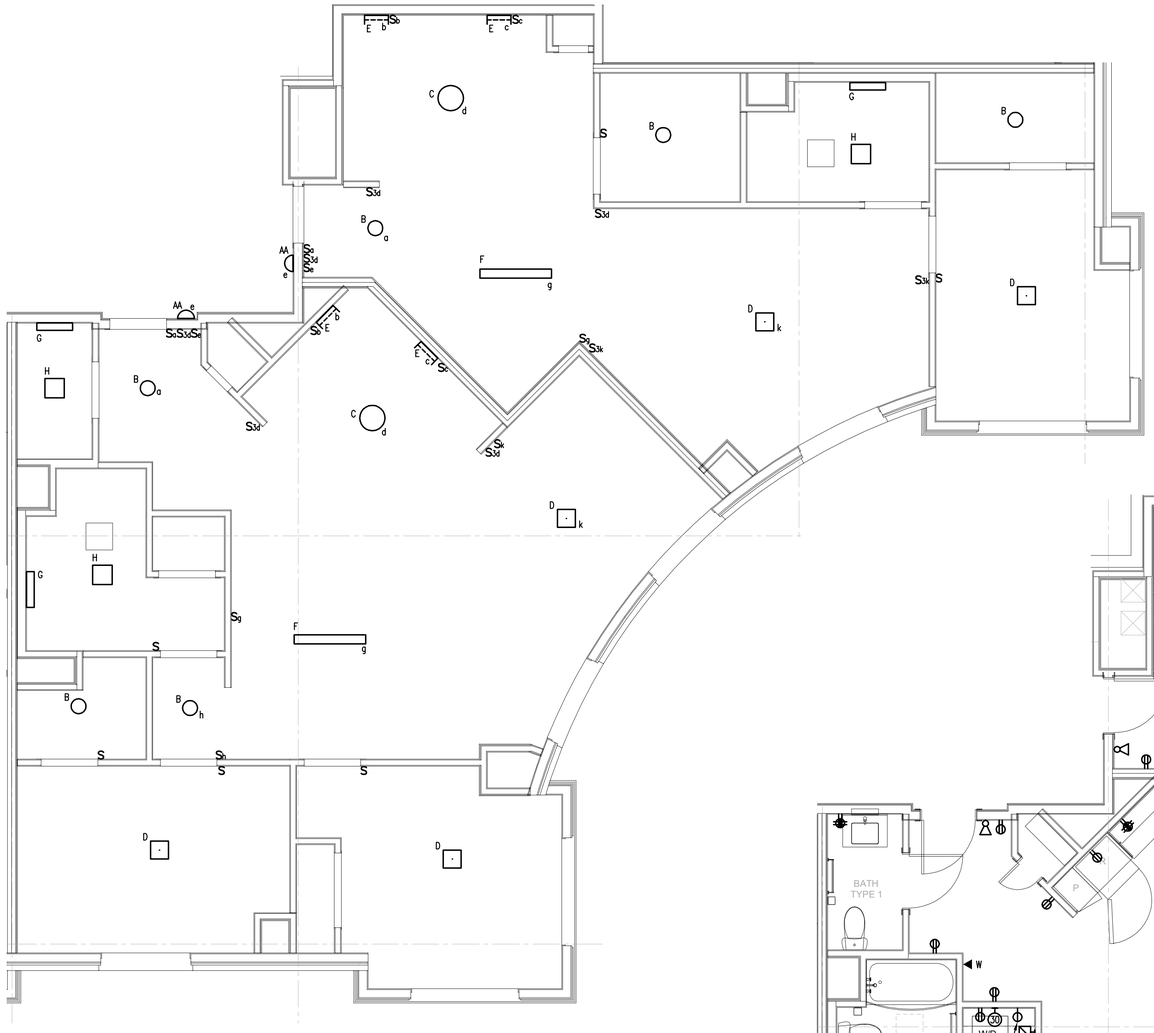

2 **2BR ARC PAIR TYPE F - ELECTRICAL LIGHTING**
SCALE: 1/4"=1'-0"

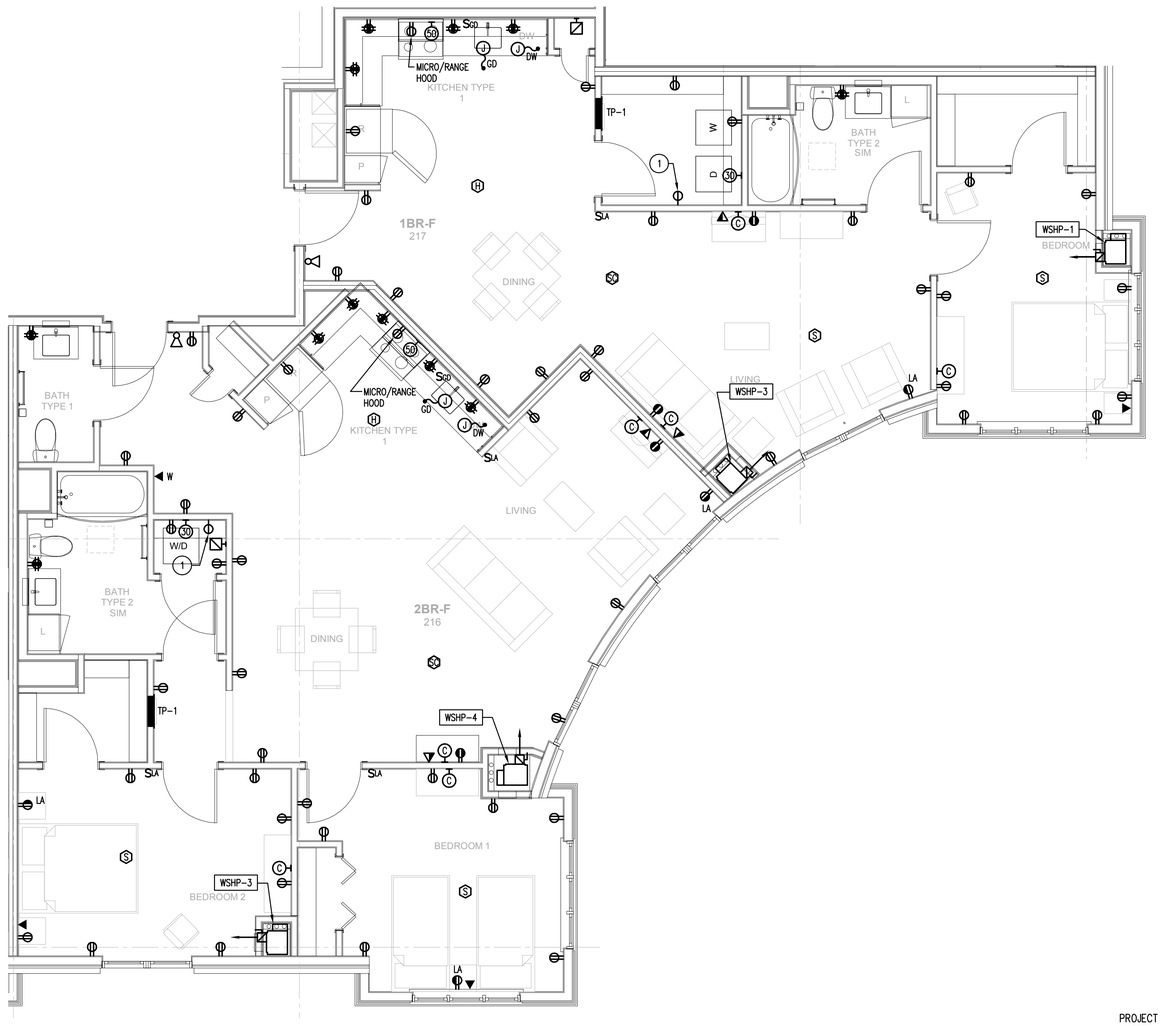

1 **2BR ARC PAIR TYPE F - ELECTRICAL POWER**
SCALE: 1/4"=1'-0" ANSI TYPE B

PROJECT NORTH

Washington Village Phase 1

20 Day Street Building B

Norwalk, CT

Trinity Washington Village Limited Partnership
&
the Norwalk Housing Authority

E-ICON ARCHITECTURE
101 SUMMER ST BOSTON MA 02110
617-451-3333 www.iconarch.com

CONSULTANT
CENTEK engineering
Centered on Solutions SM
www.CentekEng.com
(203) 488-0580
(203) 488-8587 Fax
63-2 North Branford Road, Branford, CT 06405

STAMP



KEYPLAN

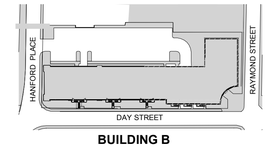

BUILDING B

N 0 2' 4' 8'

MARK	DATE	DESCRIPTION
	09-15-2014	PERMIT/ PRICING
	06-13-2014	PRICING
	11-18-2013	40% CHFA
	09-19-2013	CAM/ SPECIAL PERMIT

PROJECT NO.: 21222/CENTEK #13232.02
DRAWN BY: TJB
CHECKED BY: CKD

SHEET TITLE

TYPICAL UNIT PLANS
BUILDING B
ELECTRICAL

E-204

J:\Jobs\1323202.ME\ELEC\E-204.dwg Sep 17, 2014 - 10:11pm tgk

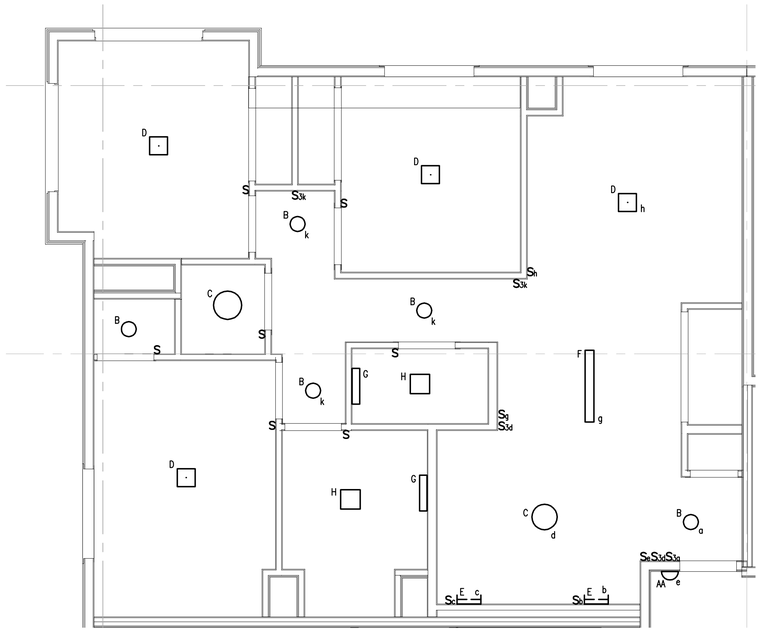

4 3BR TYPE H - ELECTRICAL LIGHTING
SCALE: 1/4"=1'-0"

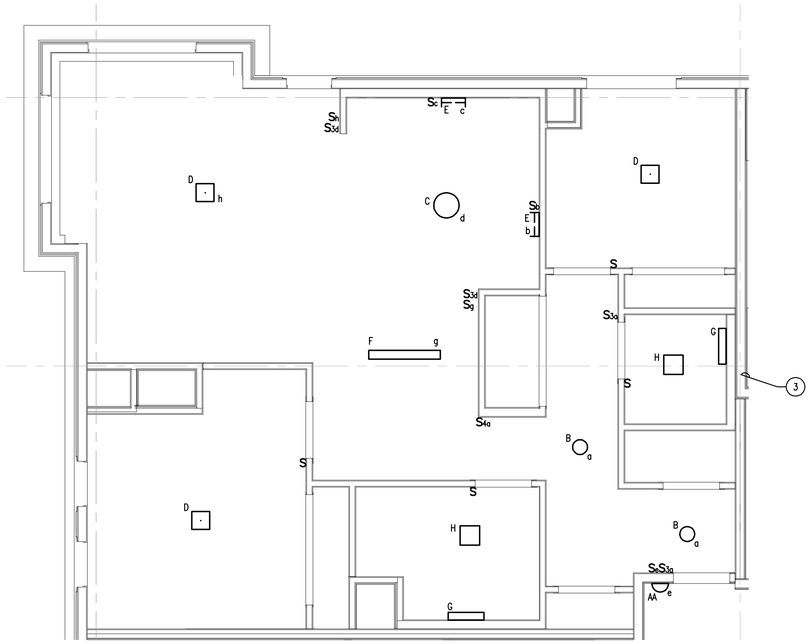

2 2BR TYPE G - ELECTRICAL LIGHTING
SCALE: 1/4"=1'-0"

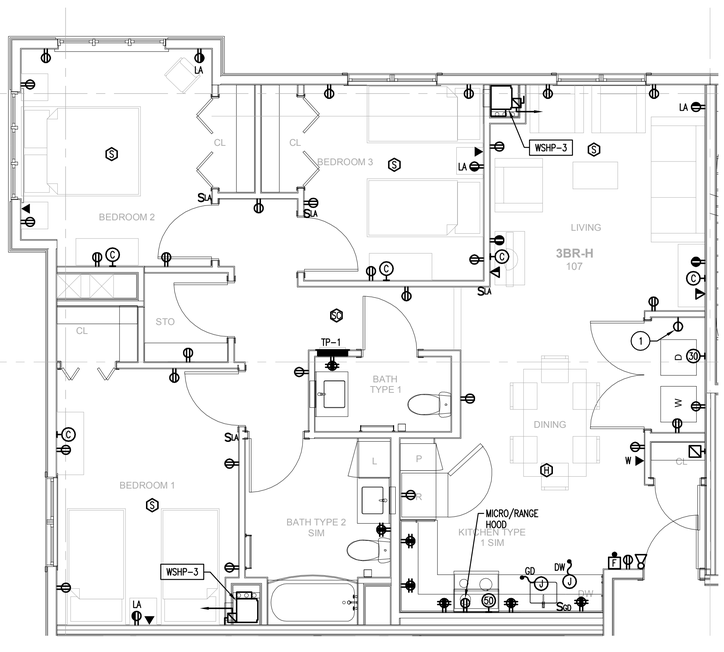

3 3BR TYPE H - ELECTRICAL POWER
SCALE: 1/4"=1'-0" ANSI TYPE A

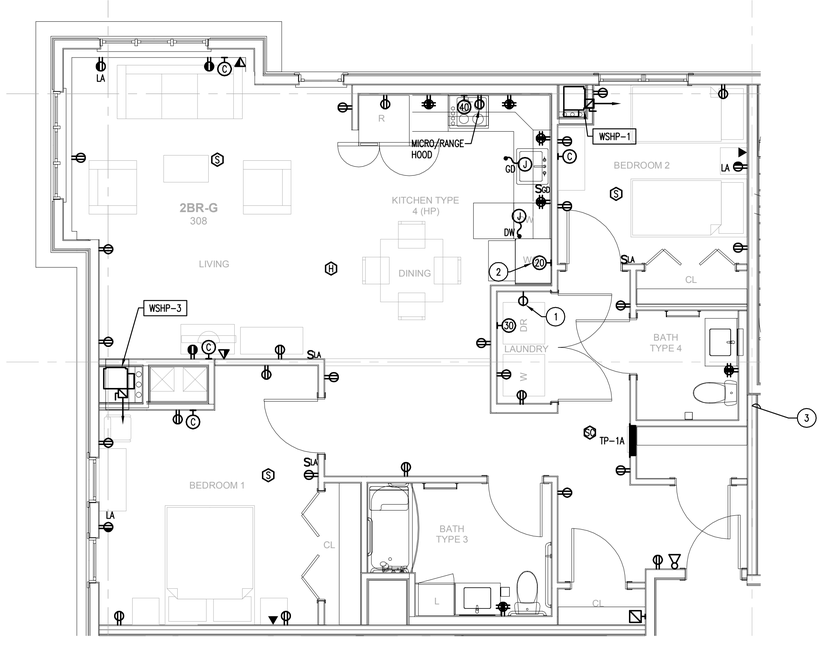

1 2BR TYPE G - ELECTRICAL POWER
SCALE: 1/4"=1'-0" ANSI TYPE A

ELECTRICAL WORK NOTES

1. RECEPTACLE FOR FLOOD STOP MOISTURE SENSOR.
2. WALL OVEN RECEPTACLE. REFER TO PANEL SCHEDULE.
3. CIRCUITING TO MATCH 3BR TYPE L.

GENERAL NOTE:

1. COORDINATE ALL WORK WITH ALL OTHER TRADES. REFER TO OTHER TRADE'S DRAWINGS FOR ADDITIONAL INFORMATION.
2. REFER TO 3 BEDROOM TOWNHOUSE UNIT FOR TYPICAL CIRCUIT ASSIGNMENTS UNLESS OTHERWISE NOTED.
3. ALL CIRCUITS IN RESIDENT UNITS ORIGINATE FROM ELECTRIC PANEL WITHIN THAT UNIT.

Washington Village Phase 1

20 Day Street Building B

Norwalk, CT

Trinity Washington Village Limited Partnership
&
the Norwalk Housing Authority

E-ICON ARCHITECTURE
101 SUMMER ST BOSTON MA 02110
617-451-3333 www.iconarch.com

CONSULTANT
CENTEK engineering
Centered on Solutions SM
www.CentekEng.com
(203) 488-0580
(203) 488-8587 Fax
63-2 North Branford Road, Branford, CT 06405

STAMP



KEYPLAN

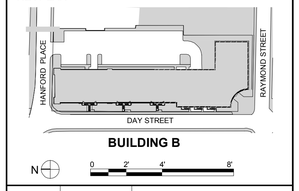

MARK	DATE	DESCRIPTION
	09-15-2014	PERMIT/ PRICING
	06-13-2014	PRICING
	11-18-2013	40% CHFA
	09-19-2013	CAM/ SPECIAL PERMIT

PROJECT NO.: 21222/CENTEK #13232.02
DRAWN BY: TJB
CHECKED BY: CKD

SHEET TITLE

TYPICAL UNIT PLANS BUILDING B ELECTRICAL

PROJECT NORTH

E-205

J:\Jobs\13232.ME\ELEC\E-205.dwg Sep 17, 2014 - 10:11pm tgk

ELECTRICAL WORK NOTES

1. RECEPTACLE FOR FLOOD STOP MOISTURE SENSOR.

GENERAL NOTE:

1. COORDINATE ALL WORK WITH ALL OTHER TRADES. REFER TO OTHER TRADE'S DRAWINGS FOR ADDITIONAL INFORMATION.
2. REFER TO 3 BEDROOM TOWNHOUSE UNIT FOR TYPICAL CIRCUIT ASSIGNMENTS UNLESS OTHERWISE NOTED.
3. ALL CIRCUITS IN RESIDENT UNITS ORIGINATE FROM ELECTRIC PANEL WITHIN THAT UNIT.

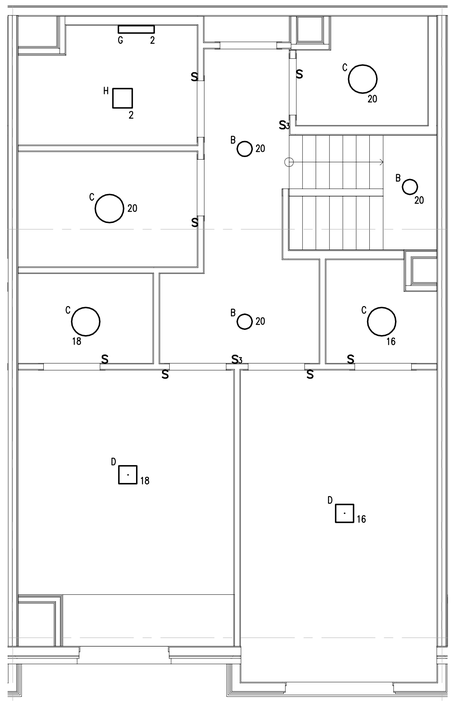

6 3BR DUPLEX TYPE K (UPPER LEVEL) - ELECTRICAL LIGHTING
SCALE: 1/4"=1'-0"

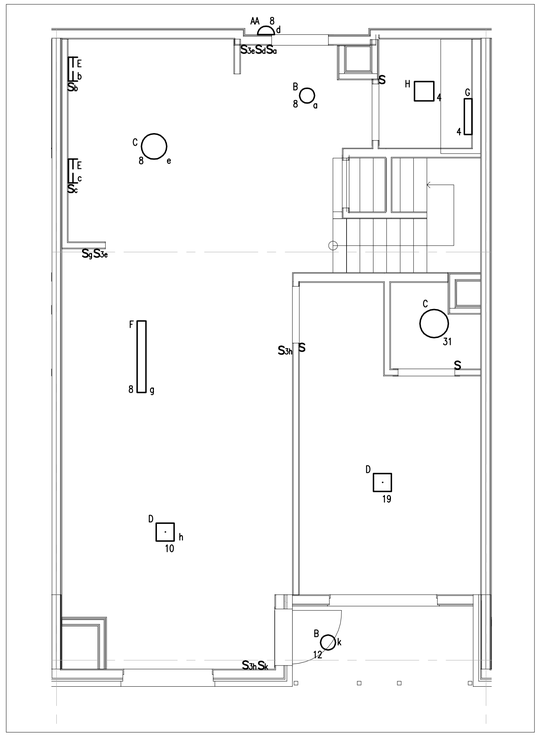

5 3BR DUPLEX TYPE K (LOWER LEVEL) - ELECTRICAL LIGHTING
SCALE: 1/4"=1'-0"

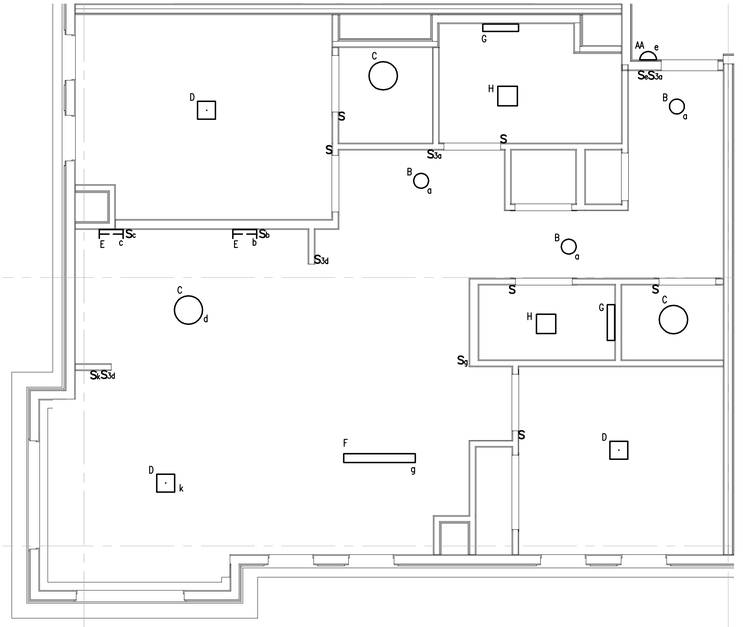

4 2BR TYPE J - ELECTRICAL LIGHTING
SCALE: 1/4"=1'-0"

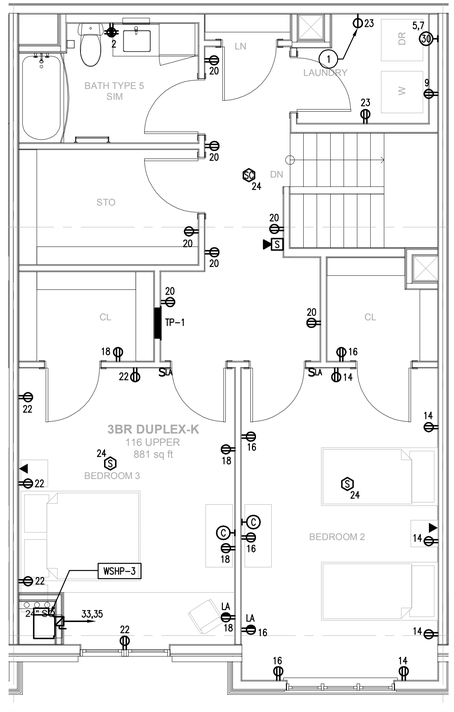

3 3BR DUPLEX TYPE K (UPPER LEVEL) - ELECTRICAL POWER
SCALE: 1/4"=1'-0" ANSI TYPE B

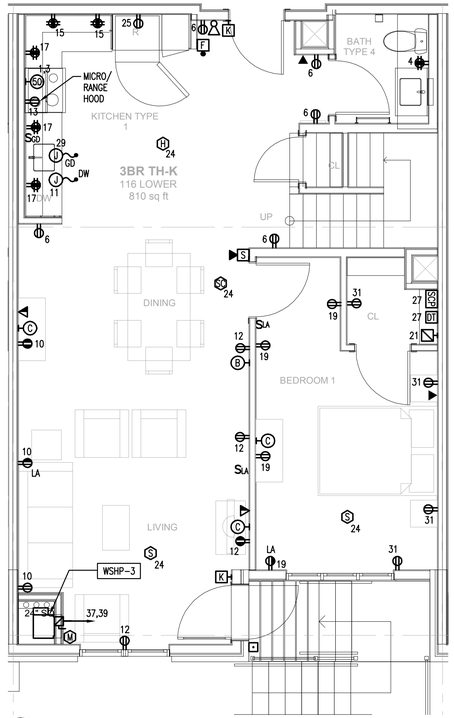

2 3BR DUPLEX TYPE K (LOWER LEVEL) - ELECTRICAL POWER
SCALE: 1/4"=1'-0" ANSI TYPE B

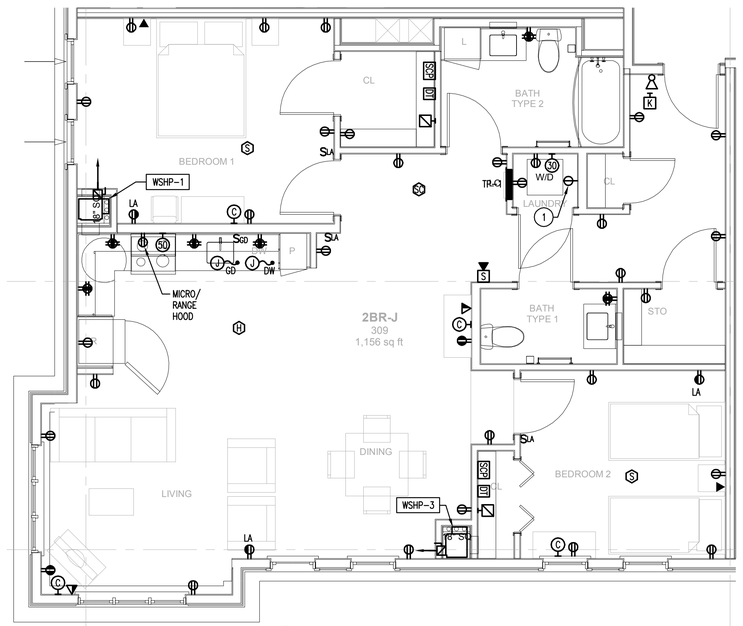

1 2BR TYPE J - ELECTRICAL POWER
SCALE: 1/4"=1'-0" ANSI TYPE B

PROJECT NORTH

Washington Village Phase 1

20 Day Street Building B

Norwalk, CT

Trinity Washington Village Limited Partnership
&
the Norwalk Housing Authority

E-ICON ARCHITECTURE
101 SUMMER ST BOSTON MA 02110
617-451-3333 www.iconarch.com

CONSULTANT
CENTEK engineering
Centered on Solutions SM
www.CentekEng.com
(203) 488-0580
(203) 488-8587 Fax
63-2 North Branford Road, Branford, CT 06405

STAMP



KEYPLAN

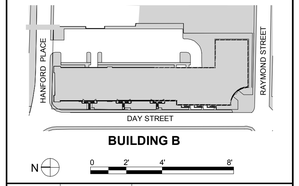

MARK	DATE	DESCRIPTION
	09-15-2014	PERMIT/ PRICING
	06-13-2014	PRICING
	11-18-2013	40% CHFA
	09-19-2013	CAM/ SPECIAL PERMIT

PROJECT NO.: 21222/CENTEK #13232.02
DRAWN BY: TJB
CHECKED BY: CKD

SHEET TITLE

TYPICAL UNIT PLANS
BUILDING B
ELECTRICAL

E-206

J:\Jobs\13232.ME\ELEC\E-206.dwg Sep 17, 2014 - 10:12pm tgk

ELECTRICAL WORK NOTES

1. RECEPTACLE FOR FLOOD STOP MOISTURE SENSOR.
2. WALL OVEN RECEPTACLE. REFER TO PANEL SCHEDULE.

GENERAL NOTE:

1. COORDINATE ALL WORK WITH ALL OTHER TRADES. REFER TO OTHER TRADE'S DRAWINGS FOR ADDITIONAL INFORMATION.
2. REFER TO 3 BEDROOM TOWNHOUSE UNIT FOR TYPICAL CIRCUIT ASSIGNMENTS UNLESS OTHERWISE NOTED.
3. ALL CIRCUITS IN RESIDENT UNITS ORIGINATE FROM ELECTRIC PANEL WITHIN THAT UNIT.

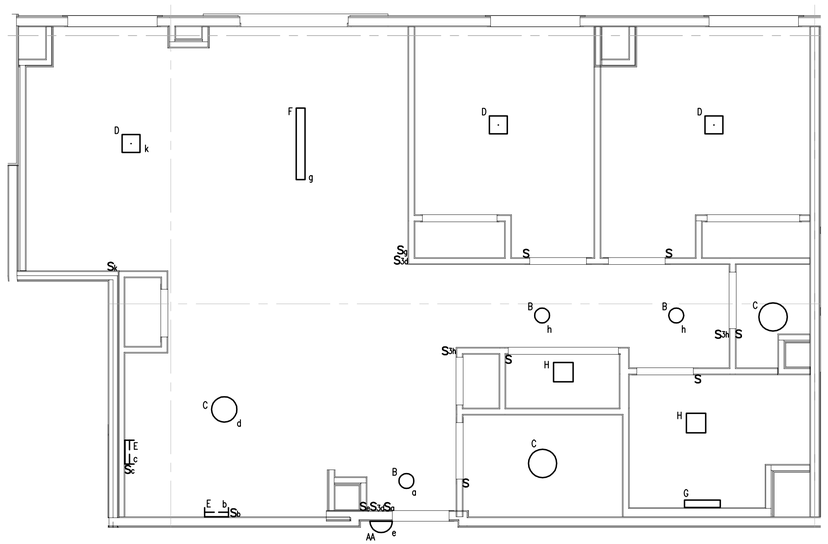

4 2BR TYPE M - ELECTRICAL LIGHTING
SCALE: 1/4"=1'-0"

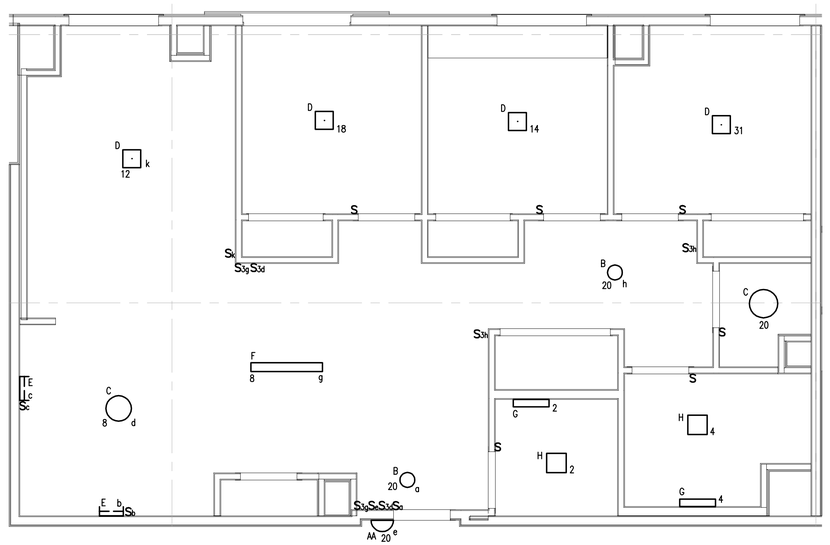

2 3BR TYPE L - ELECTRICAL LIGHTING
SCALE: 1/4"=1'-0"

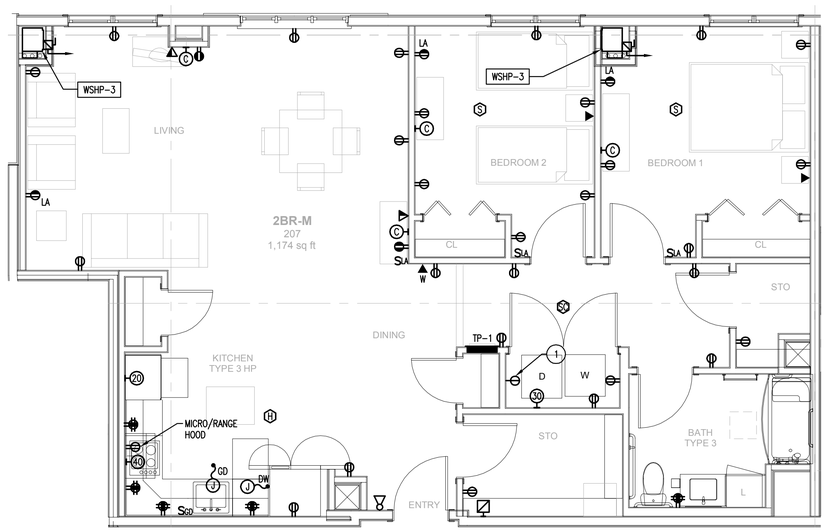

3 2BR TYPE M - ELECTRICAL POWER
SCALE: 1/4"=1'-0"

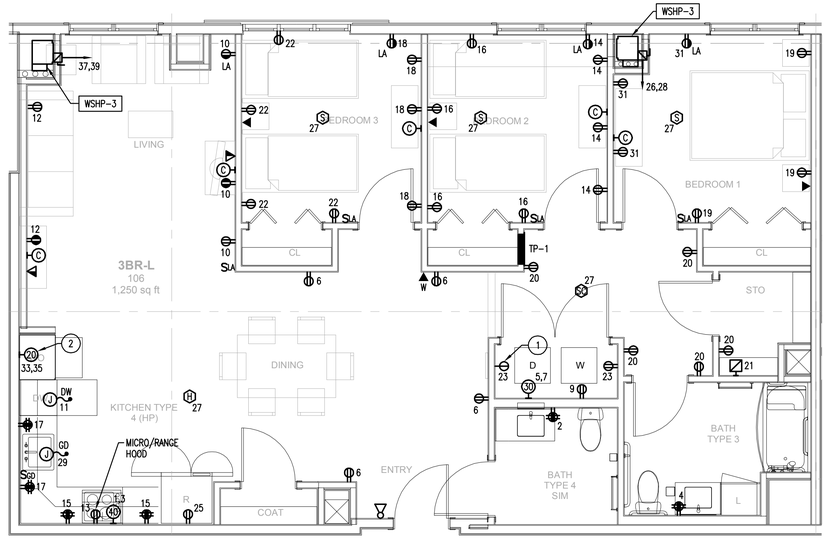

1 3BR TYPE L - ELECTRICAL POWER
SCALE: 1/4"=1'-0"

PROJECT NORTH

Washington Village Phase 1

20 Day Street Building B

Norwalk, CT

Trinity Washington Village Limited Partnership
&
the Norwalk Housing Authority

E-ICON ARCHITECTURE
101 SUMMER ST BOSTON MA 02110
617-451-3333 www.iconarch.com

CONSULTANT
CENTEK engineering
Centered on Solutions SM
www.CentekEng.com
(203) 488-0580
(203) 488-8587 Fax
63-2 North Branford Road, Branford, CT 06405

STAMP

STATE OF CONNECTICUT · FRANK R. CIOFFI · No. 17006 · LICENSED PROFESSIONAL ENGINEER

KEYPLAN

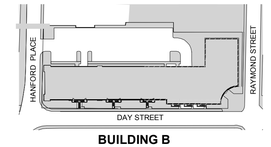

MARK	DATE	DESCRIPTION
	09-15-2014	PERMIT/ PRICING
	06-13-2014	PRICING
	11-18-2013	40% CHFA
	09-19-2013	CAM/ SPECIAL PERMIT

PROJECT NO.: 21222/CENTEK #13232.02
DRAWN BY: KHS
CHECKED BY: FRC

SHEET TITLE

TYPICAL UNIT PLANS
BUILDING B
ELECTRICAL

E-207

J:\Jobs\1323202.ME\ELEC\E-207.dwg Sep 17, 2014 - 10:12pm tgk

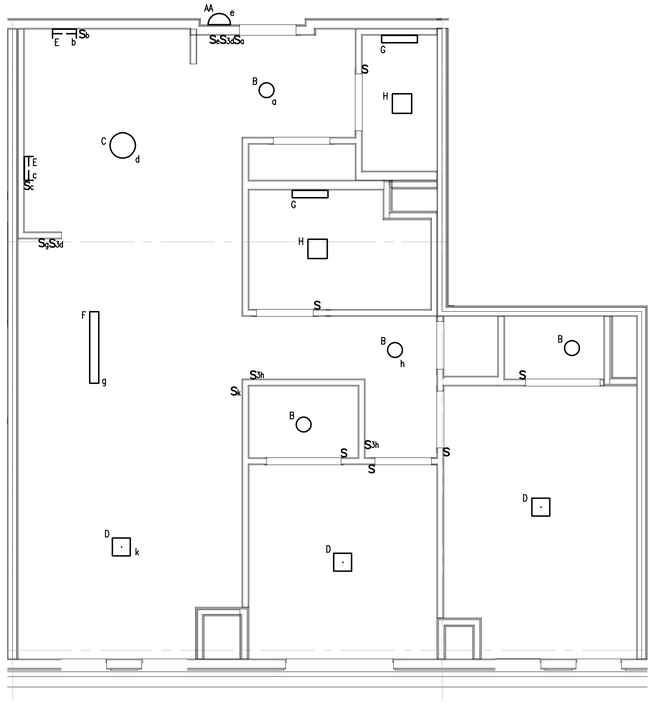

2 **2BR TYPE N - ELECTRICAL LIGHTING**
SCALE: 1/4"=1'-0"

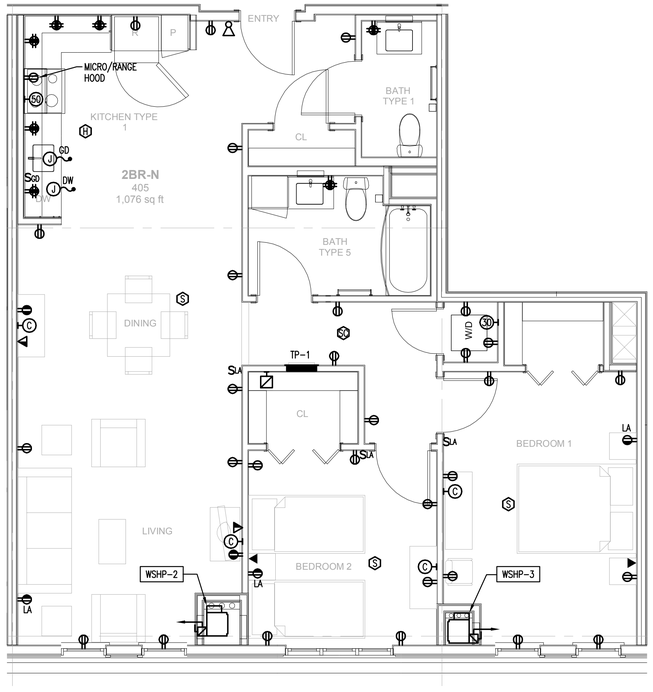

1 **2BR TYPE N - ELECTRICAL POWER**
SCALE: 1/4"=1'-0"

PROJECT NORTH

Washington Village Phase 1

20 Day Street Building B

Norwalk, CT

Trinity Washington Village Limited Partnership
&
the Norwalk Housing Authority

E-ICON ARCHITECTURE
101 SUMMER ST BOSTON MA 02110
617-451-3333 www.iconarch.com

CONSULTANT
CENTEK engineering
Centered on Solutions ℠
www.CentekEng.com
(203) 488-0580
(203) 488-8587 Fax
63-2 North Branford Road, Branford, CT 06405

STAMP



KEYPLAN

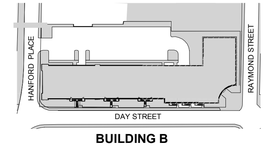

MARK	DATE	DESCRIPTION
	09-15-2014	PERMIT/ PRICING
	06-13-2014	PRICING
	11-18-2013	40% CHFA
	09-19-2013	CAM/ SPECIAL PERMIT

PROJECT NO.: 21222/CENTEK #13232.02
DRAWN BY: TJB
CHECKED BY: CKD

SHEET TITLE

TYPICAL UNIT PLANS
BUILDING B
ELECTRICAL

E-208

J:\Jobs\13232.ME\ELEC\E-208.dwg Sep 17, 2014 - 10:13pm tgk

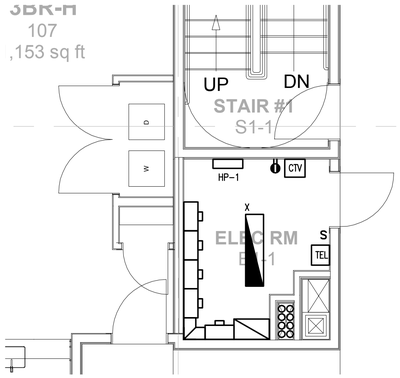

1 FIRST FLOOR - ELECTRICAL CLOSET
SCALE: 1/4"=1'-0"

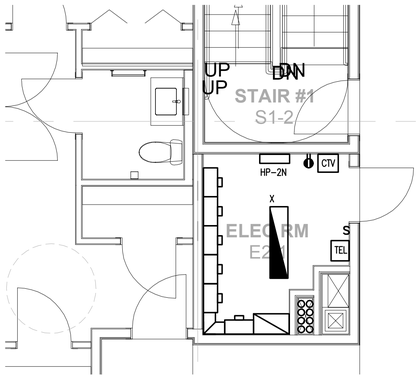

2 SECOND FLOOR (NORTH WING) - ELECTRICAL CLOSET
SCALE: 1/4"=1'-0"

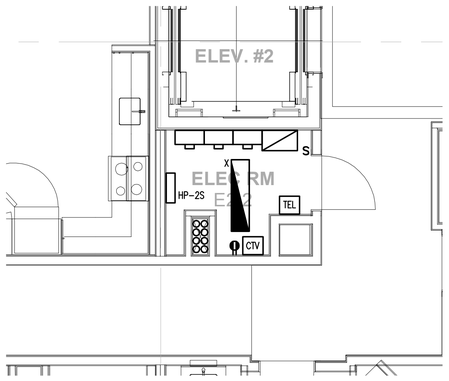

3 SECOND FLOOR (SOUTH WING) - ELECTRICAL CLOSET
SCALE: 1/4"=1'-0"

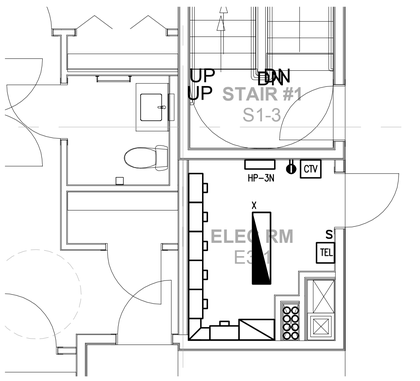

4 THIRD FLOOR (NORTH WING) - ELECTRICAL CLOSET
SCALE: 1/4"=1'-0"

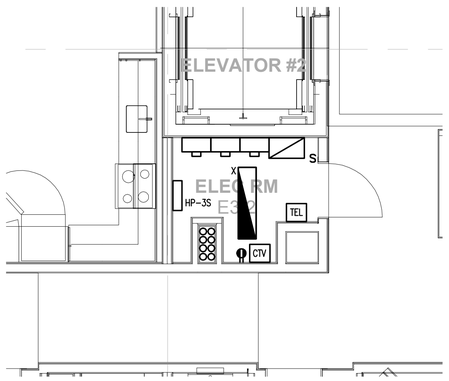

5 THIRD FLOOR (SOUTH WING) - ELECTRICAL CLOSET
SCALE: 1/4"=1'-0"

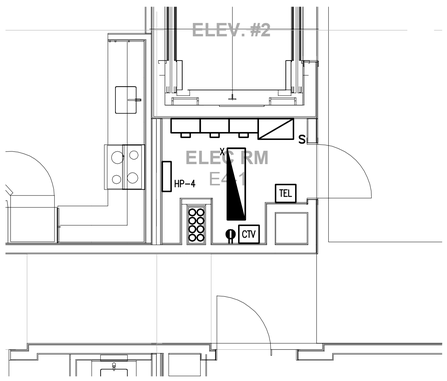

6 FOURTH FLOOR - ELECTRICAL CLOSET
SCALE: 1/4"=1'-0"

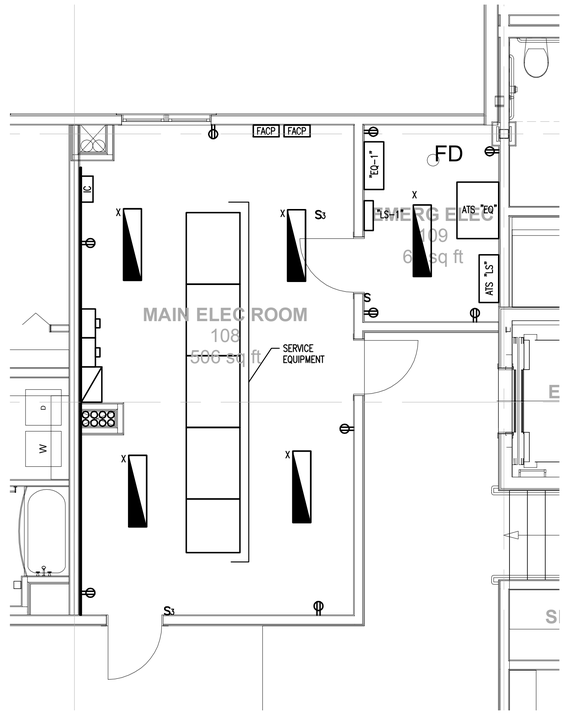

7 GROUND FLOOR - ELECTRICAL ROOM
SCALE: 1/4"=1'-0"

ELECTRICAL WORK NOTES

GENERAL NOTE:

1. COORDINATE ALL WORK WITH ALL OTHER TRADES. REFER TO OTHER TRADE'S DRAWINGS FOR ADDITIONAL INFORMATION.

PROJECT NORTH

Washington Village Phase 1

20 Day Street Building B

Norwalk, CT

Trinity Washington Village Limited Partnership
&
the Norwalk Housing Authority

E-ICON ARCHITECTURE
101 SUMMER ST BOSTON MA 02110
617-451-3333 www.iconarch.com

CONSULTANT
CENTEK engineering
Centered on Solutions ℠
www.CentekEng.com
(203) 488-0580
(203) 488-8587 Fax
63-2 North Branford Road, Branford, CT 06405

STAMP

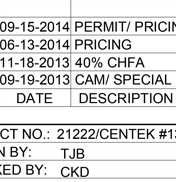

KEYPLAN

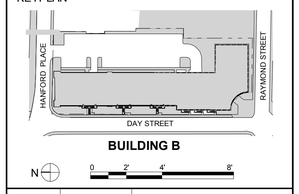

MARK	DATE	DESCRIPTION
	09-15-2014	PERMIT/ PRICING
	06-13-2014	PRICING
	11-18-2013	40% CHFA
	09-19-2013	CAM/ SPECIAL PERMIT

PROJECT NO.: 21222/CENTEK #13232.02
DRAWN BY: TJB
CHECKED BY: CKD

SHEET TITLE

BUILDING B - ELECTRICAL ROOM PART PLANS

E-209

J:\Jobs\13232\02.ME\ELEC\E-209.dwg Sep 17, 2014 - 10:13pm tgk

LIGHTNING PROTECTION LEGEND

CONDUCTOR CABLE:		STRUCTURAL STEEL TO GROUND ELECTRODE:	
CONCEALED CABLE:		DOWNLEAD EXPOSED ON WALL:	
GROUNDING LOOP:		BOND:	
AIR TERMINAL:		GROUND PLATE:	
AIR TERMINAL W/ THRU ROOF UNIT:		DOWNLEAD TO STEEL:	
TEST WELL:		BUSBAR:	
THRU ROOF UNIT W/CONCEALED CABLE TO GROUND ELECTRODE:		THRU WALL UNIT:	
GROUND ELECTRODE:			

LIGHTNING PROTECTION GENERAL NOTES

1. PROVIDE CONTINUITY TO ALL METALLIC AND/OR ELECTRICALLY GROUNDED BODIES WITHIN 6 FEET OF THE MAIN LIGHTNING PROTECTION CONDUCTOR.
2. BOND WATER MAIN, ELECTRIC, CABLE TV, PHONE GROUNDS AND GAS OR OIL LINES IF SO STATED IN THE CONTRACT.
3. REFER TO PROJECT SPECIFICATIONS FOR DETAILED REQUIREMENTS OF LIGHTNING PROTECTION SYSTEM.

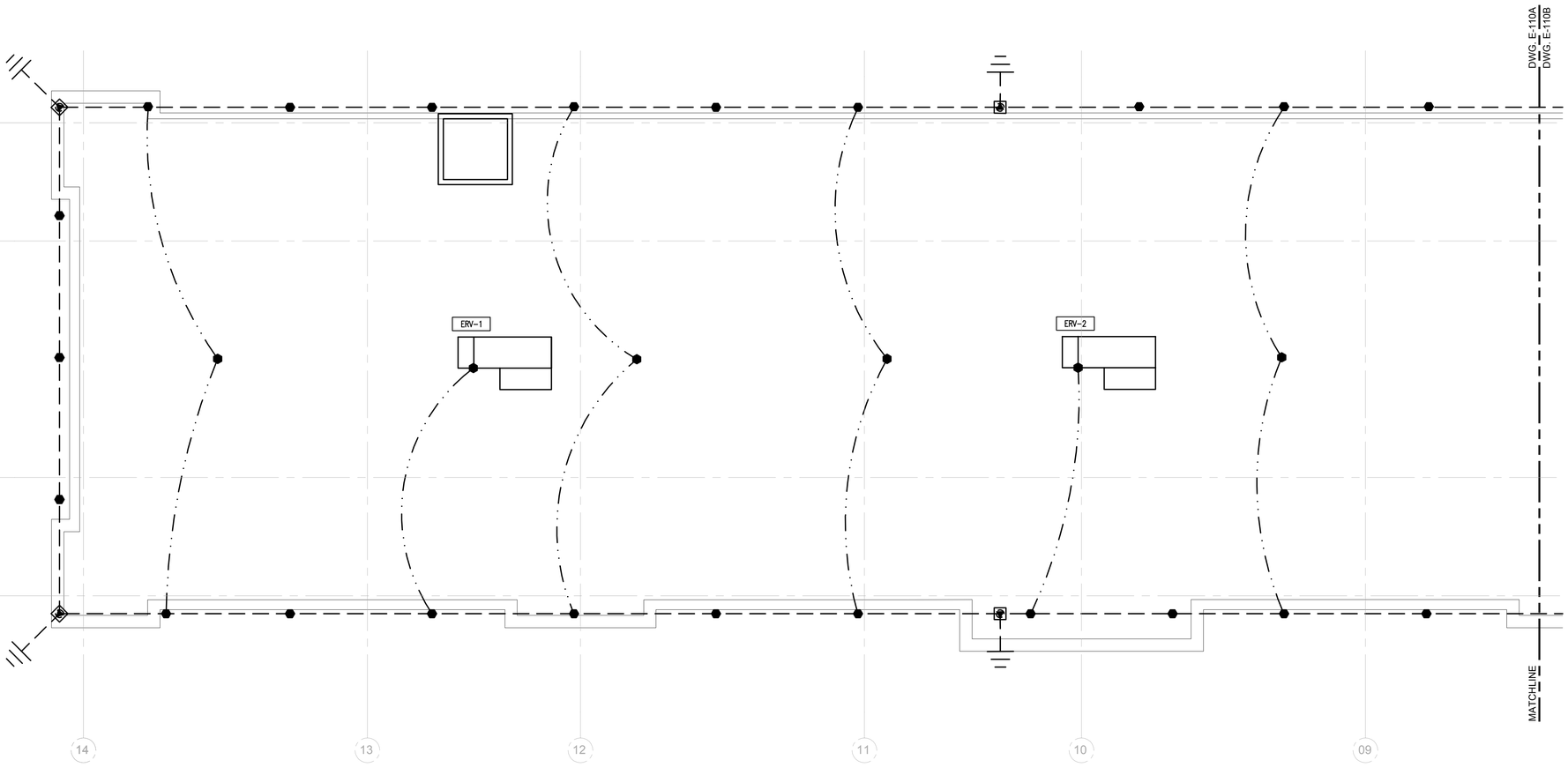

1 ROOF PLAN (NORTH WING) - ELECTRICAL
SCALE: 1/8"=1'-0"

PROJECT NORTH

Washington Village Phase 1

20 Day Street Building B

Norwalk, CT

Trinity Washington Village Limited Partnership
&
the Norwalk Housing Authority

E-ICON ARCHITECTURE
101 SUMMER ST BOSTON MA 02110
617-451-3333 www.iconarch.com

CONSULTANT
CENTEK engineering
Centered on Solutions ℠
www.CentekEng.com
(203) 488-0580
(203) 488-8587 Fax
63-2 North Branford Road, Branford, CT 06405

STAMP

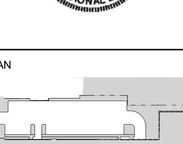

KEYPLAN

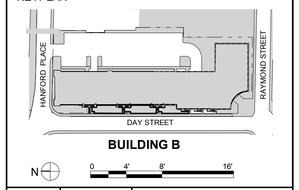

MARK	DATE	DESCRIPTION
	09-15-2014	PERMIT/ PRICING
	06-13-2014	PRICING
	11-18-2013	40% CHFA
	09-19-2013	CAM/ SPECIAL PERMIT

PROJECT NO.: 21222/CENTEK #13232.02
DRAWN BY: TJB
CHECKED BY: CKD

SHEET TITLE

BUILDING B
ROOF PLAN (NORTH WING) - LIGHTNING PROTECTION

E-301

J:\Jobs\13232.ME\ELEC\E-301 & E302.dwg Sep 17, 2014 - 10:14pm tgk

LIGHTNING PROTECTION LEGEND

CONDUCTOR CABLE:		STRUCTURAL STEEL TO GROUND ELECTRODE:	
CONCEALED CABLE:		DOWNLEAD EXPOSED ON WALL:	
GROUNDING LOOP:		BOND:	
AIR TERMINAL:		GROUND PLATE:	
AIR TERMINAL W/ THRU ROOF UNIT:		DOWNLEAD TO STEEL:	
TEST WELL:		BUSBAR:	
THRU ROOF UNIT W/CONCEALED CABLE TO GROUND ELECTRODE:		THRU WALL UNIT:	
GROUND ELECTRODE:			

LIGHTNING PROTECTION GENERAL NOTES

1. PROVIDE CONTINUITY TO ALL METALLIC AND/OR ELECTRICALLY GROUNDED BODIES WITHIN 6 FEET OF THE MAIN LIGHTNING PROTECTION CONDUCTOR.
2. BOND WATER MAIN, ELECTRIC, CABLE TV, PHONE GROUNDS AND GAS OR OIL AS REQUIRED BY NEC.
3. REFER TO PROJECT SPECIFICATIONS FOR DETAILED REQUIREMENTS OF LIGHTNING PROTECTION SYSTEM.
4. PROVIDE 3/0 AWG COPPER GROUND RING AROUND ENTIRE BUILDING BONDED TO GROUND RODS AS SHOWN.

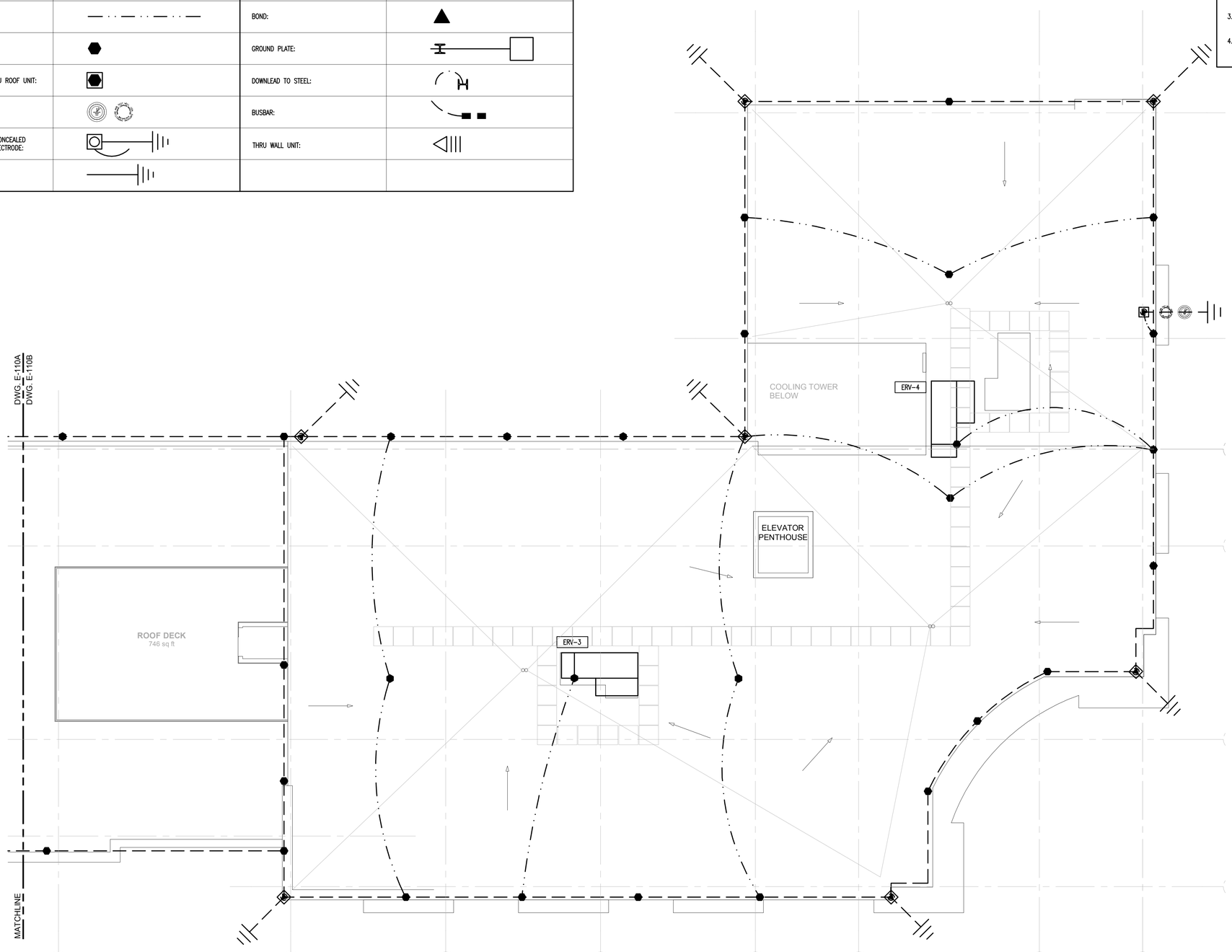

1 ROOF PLAN (SOUTH WING) - ELECTRICAL
SCALE: 1/8"=1'-0"

PROJECT NORTH

Washington Village Phase 1

20 Day Street Building B

Norwalk, CT

Trinity Washington Village Limited Partnership
&
the Norwalk Housing Authority

E-ICON ARCHITECTURE
101 SUMMER ST BOSTON MA 02110
617-451-3333 www.iconarch.com

CONSULTANT
CENTEK engineering
Centered on Solutions ℠
www.CentekEng.com
(203) 488-0580
(203) 488-8587 Fax
63-2 North Branford Road, Branford, CT 06405

STAMP



KEYPLAN

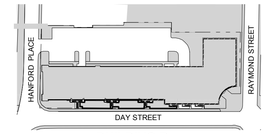

BUILDING B

N 0 4' 8' 16'

MARK	DATE	DESCRIPTION
	09-15-2014	PERMIT/ PRICING
	06-13-2014	PRICING
	11-18-2013	40% CHFA
	09-19-2013	CAM/ SPECIAL PERMIT

PROJECT NO.: 21222/CENTEK #13232.02
DRAWN BY: TJB
CHECKED BY: CKD

SHEET TITLE

BUILDING B
ROOF PLAN (SOUTH WING) - LIGHTNING PROTECTION

E-302

J:\Jobs\1323202.ME\ELEC\E-301 & E302.dwg Sep 17, 2014 - 10:14pm tgk

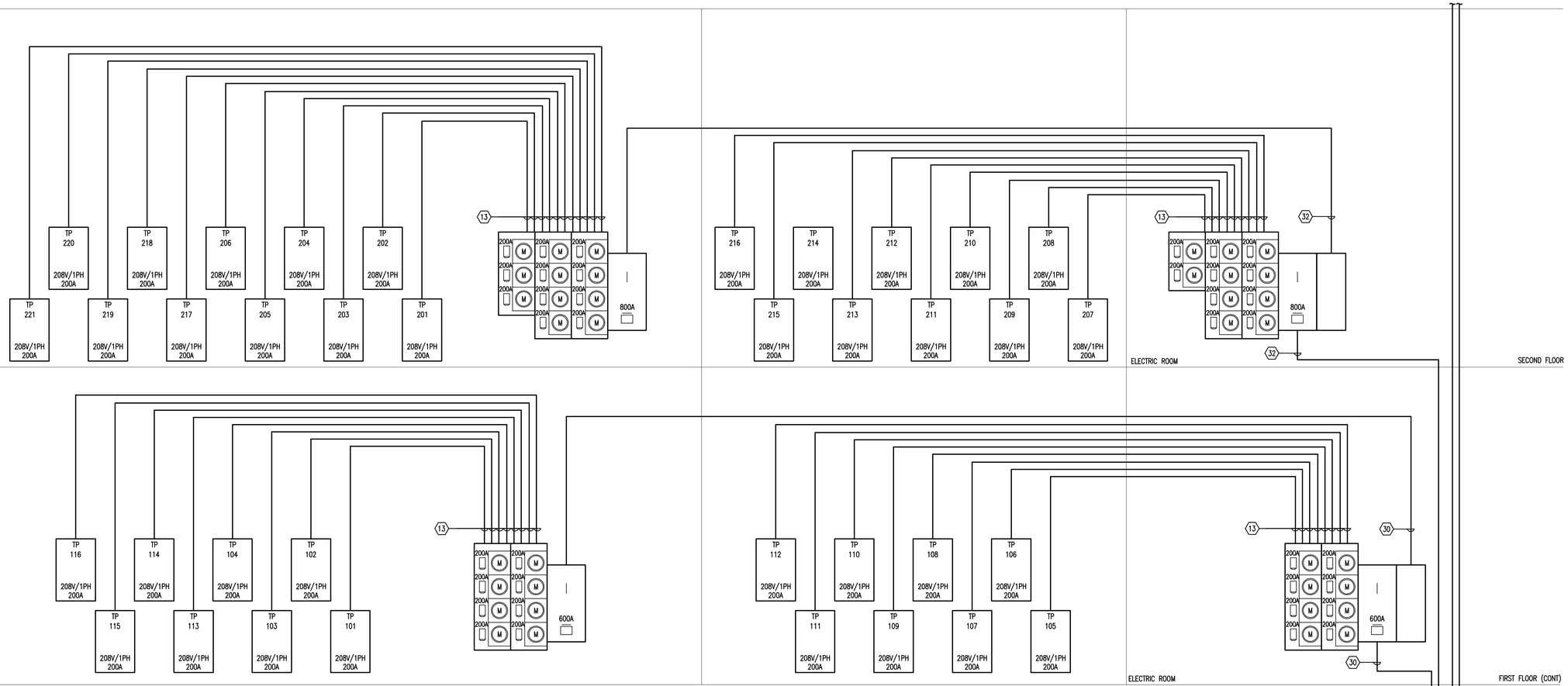

LEGEND

(#) = REFER TO DRAWING E-002 FOR FEEDER SIZE SCHEDULE.

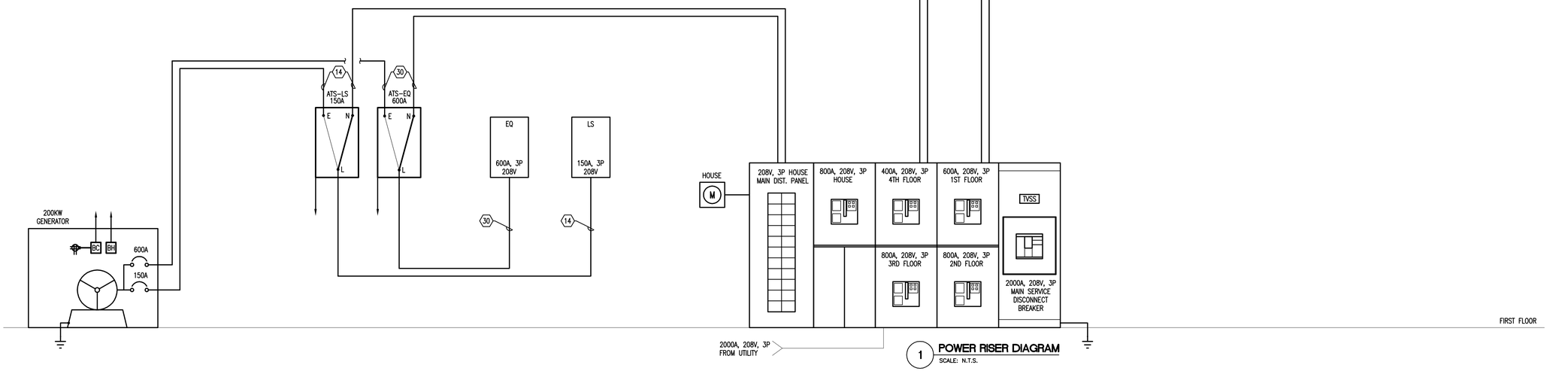

1 **POWER RISER DIAGRAM**
SCALE: N.T.S.

J:\Jobs\1323202.WE\ELEC\E-401.dwg Sep 17, 2014 - 10:15pm tgk

Washington Village Phase 1

20 Day Street Building B

Norwalk, CT

Trinity Washington Village Limited Partnership
&
the Norwalk Housing Authority

E-ICON ARCHITECTURE
101 SUMMER ST BOSTON MA 02110
617-451-3333 www.iconarch.com

CONSULTANT
CENTEK engineering
Centered on Solutions ℠
www.CentekEng.com
(203) 488-0580
(203) 488-8587 Fax
63-2 North Branford Road, Branford, CT 06405

STAMP



KEYPLAN

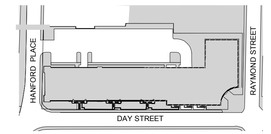

BUILDING B

N

MARK	DATE	DESCRIPTION
	09-15-2014	PERMIT/ PRICING
	06-13-2014	PRICING
	11-18-2013	40% CHFA
	09-19-2013	CAM/ SPECIAL PERMIT

PROJECT NO.: 21222/CENTEK #13232.02
DRAWN BY: TJB
CHECKED BY: CKD

SHEET TITLE

ELECTRICAL RISER DIAGRAM (BUILDING B)

E-401

LEGEND

(#) = REFER TO DRAWING E-002 FOR FEEDER SIZE SCHEDULE.

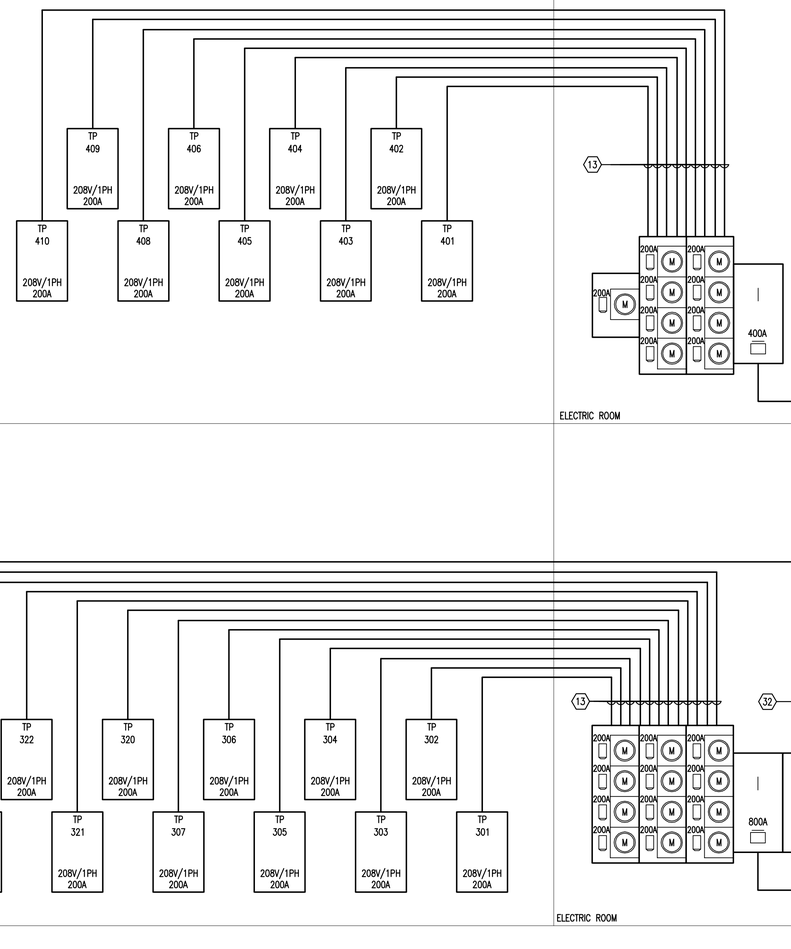

1 **POWER RISER DIAGRAM**
SCALE: N.T.S.

Washington Village Phase 1

20 Day Street Building B

Norwalk, CT

Trinity Washington Village Limited Partnership
&
the Norwalk Housing Authority

E-ICON ARCHITECTURE
101 SUMMER ST BOSTON MA 02110
617-451-3333 www.iconarch.com

CONSULTANT
CENTEK engineering
Centered on Solutions ℠
www.CentekEng.com
(203) 488-0580
(203) 488-8587 Fax
63-2 North Branford Road, Branford, CT 06405

STAMP



KEYPLAN

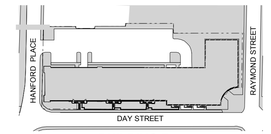

BUILDING B

N

MARK	DATE	DESCRIPTION
	09-15-2014	PERMIT/ PRICING
	06-13-2014	PRICING
	11-18-2013	40% CHFA
	09-19-2013	CAM/ SPECIAL PERMIT

PROJECT NO.: 21222/CENTEK #13232.02
DRAWN BY: TJB
CHECKED BY: CKD

SHEET TITLE

ELECTRICAL RISER DIAGRAM (BUILDING B)

E-402

J:\Jobs\13232\02.ME\ELEC\E-402.dwg Sep 17, 2014 - 10:15pm tgk

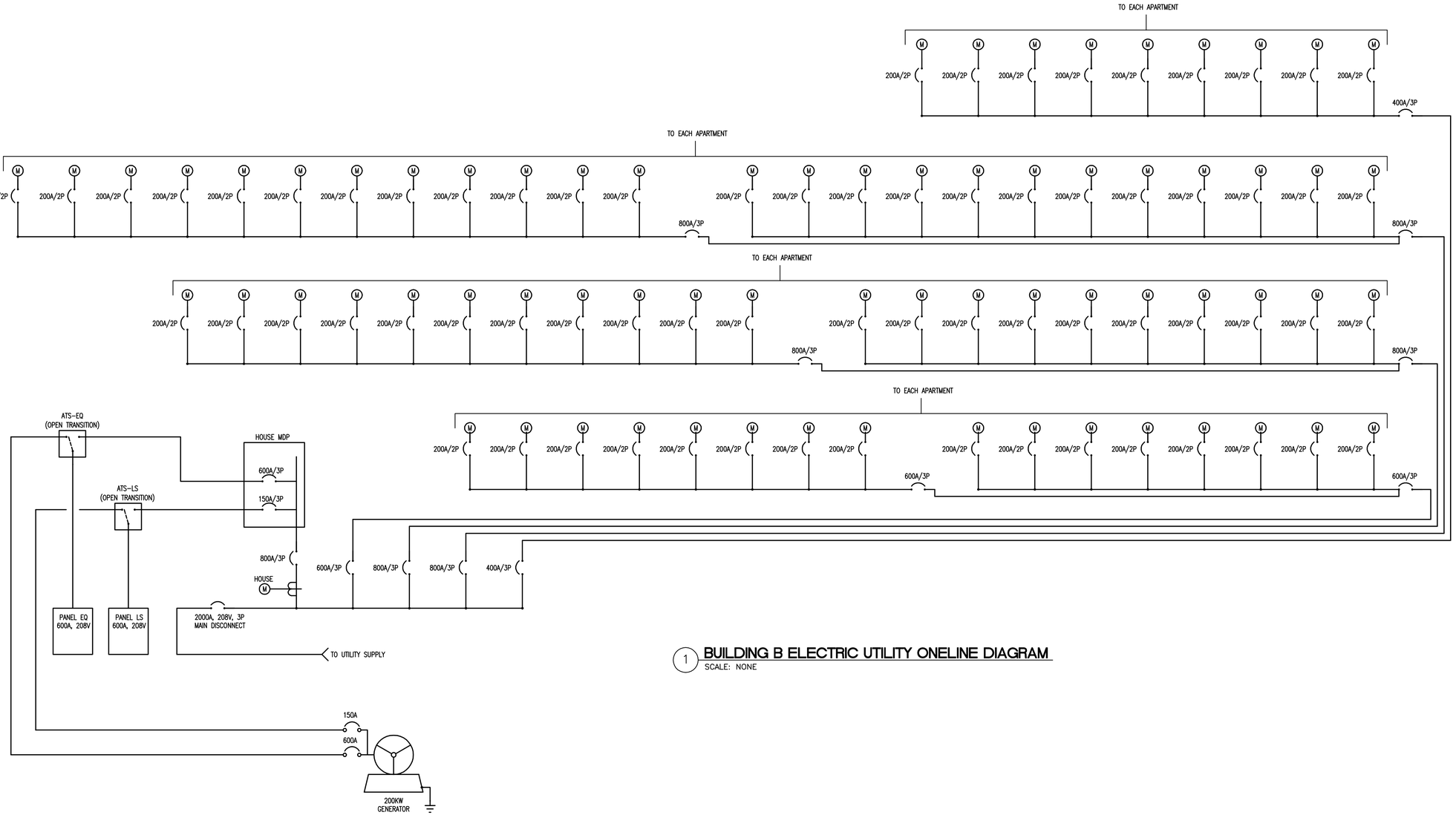

1 **BUILDING B ELECTRIC UTILITY ONELINE DIAGRAM**
SCALE: NONE

Washington Village Phase 1

20 Day Street Building B

Norwalk, CT

Trinity Washington Village Limited Partnership
&
the Norwalk Housing Authority

E-ICON ARCHITECTURE
101 SUMMER ST BOSTON MA 02110
617-451-3333 www.iconarch.com

CONSULTANT
CENTEK engineering
Centered on Solutions ℠
www.CentekEng.com
(203) 488-0580
(203) 488-8587 Fax
63-2 North Branford Road, Branford, CT 06405

STAMP



KEYPLAN

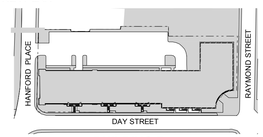

BUILDING B

N

MARK	DATE	DESCRIPTION
	09-15-2014	PERMIT/ PRICING
	06-13-2014	PRICING
	11-18-2013	40% CHFA
	09-19-2013	CAM/ SPECIAL PERMIT

PROJECT NO.: 21222/CENTEK #13232.02
DRAWN BY: TJB
CHECKED BY: CKD

SHEET TITLE

ELECTRICAL ONELINE DIAGRAM

E-403

J:\Jobs\13232002.ME\ELEC\E-403.dwg Sep 17, 2014 - 10:15pm tgk

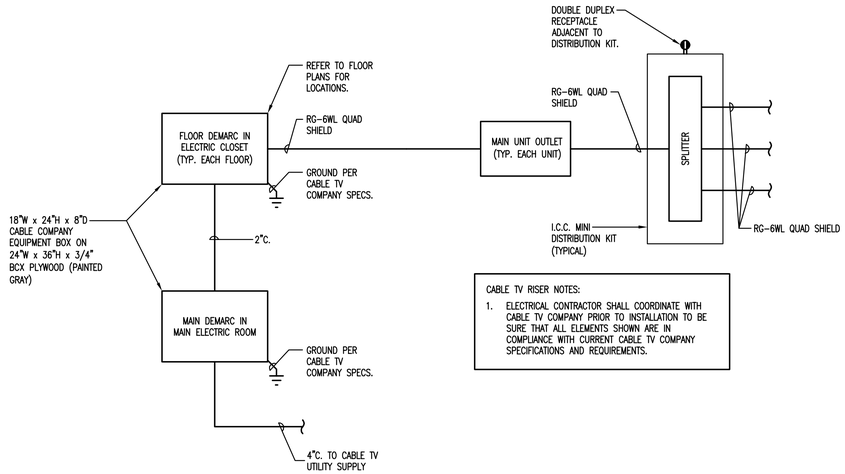

CABLE TV RISER NOTES:

1. ELECTRICAL CONTRACTOR SHALL COORDINATE WITH CABLE TV COMPANY PRIOR TO INSTALLATION TO BE SURE THAT ALL ELEMENTS SHOWN ARE IN COMPLIANCE WITH CURRENT CABLE TV COMPANY SPECIFICATIONS AND REQUIREMENTS.

1 CABLE TV RISER DIAGRAM
SCALE: N.T.S.

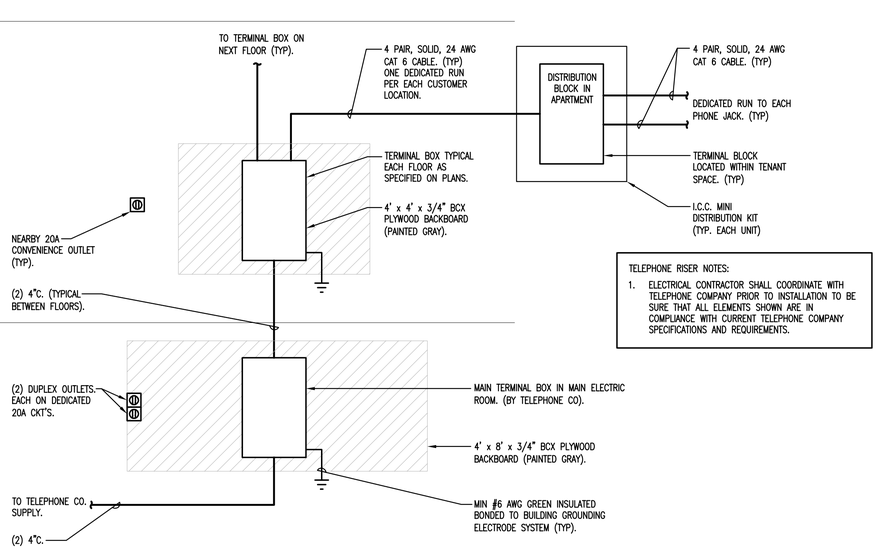

TELEPHONE RISER NOTES:

1. ELECTRICAL CONTRACTOR SHALL COORDINATE WITH TELEPHONE COMPANY PRIOR TO INSTALLATION TO BE SURE THAT ALL ELEMENTS SHOWN ARE IN COMPLIANCE WITH CURRENT TELEPHONE COMPANY SPECIFICATIONS AND REQUIREMENTS.

2 TELEPHONE RISER DIAGRAM
SCALE: N.T.S.

J:\jobs\1323202.ME\ELEC\E-404.dwg Sep 17, 2014 - 10:16pm tgk

Washington Village Phase 1

20 Day Street Building B

Norwalk, CT

Trinity Washington Village Limited Partnership
&
the Norwalk Housing Authority

E-ICON ARCHITECTURE
101 SUMMER ST BOSTON MA 02110
617-451-3333 www.iconarch.com

CONSULTANT
CENTEK engineering
Centered on Solutions ℠
www.CentekEng.com
(203) 488-0580
(203) 488-8587 Fax
63-2 North Branford Road, Branford, CT 06405

STAMP



KEYPLAN

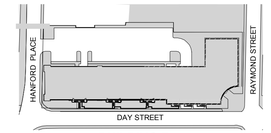

BUILDING B

N

MARK	DATE	DESCRIPTION
	09-15-2014	PERMIT/ PRICING
	06-13-2014	PRICING
	11-18-2013	40% CHFA
	09-19-2013	CAM/ SPECIAL PERMIT

PROJECT NO.: 21222/CENTEK #13232.02
DRAWN BY: TJB
CHECKED BY: CKD

SHEET TITLE

TELEPHONE, CABLE AND LIGHTNING PROTECTION RISER DIAGRAMS

E-404

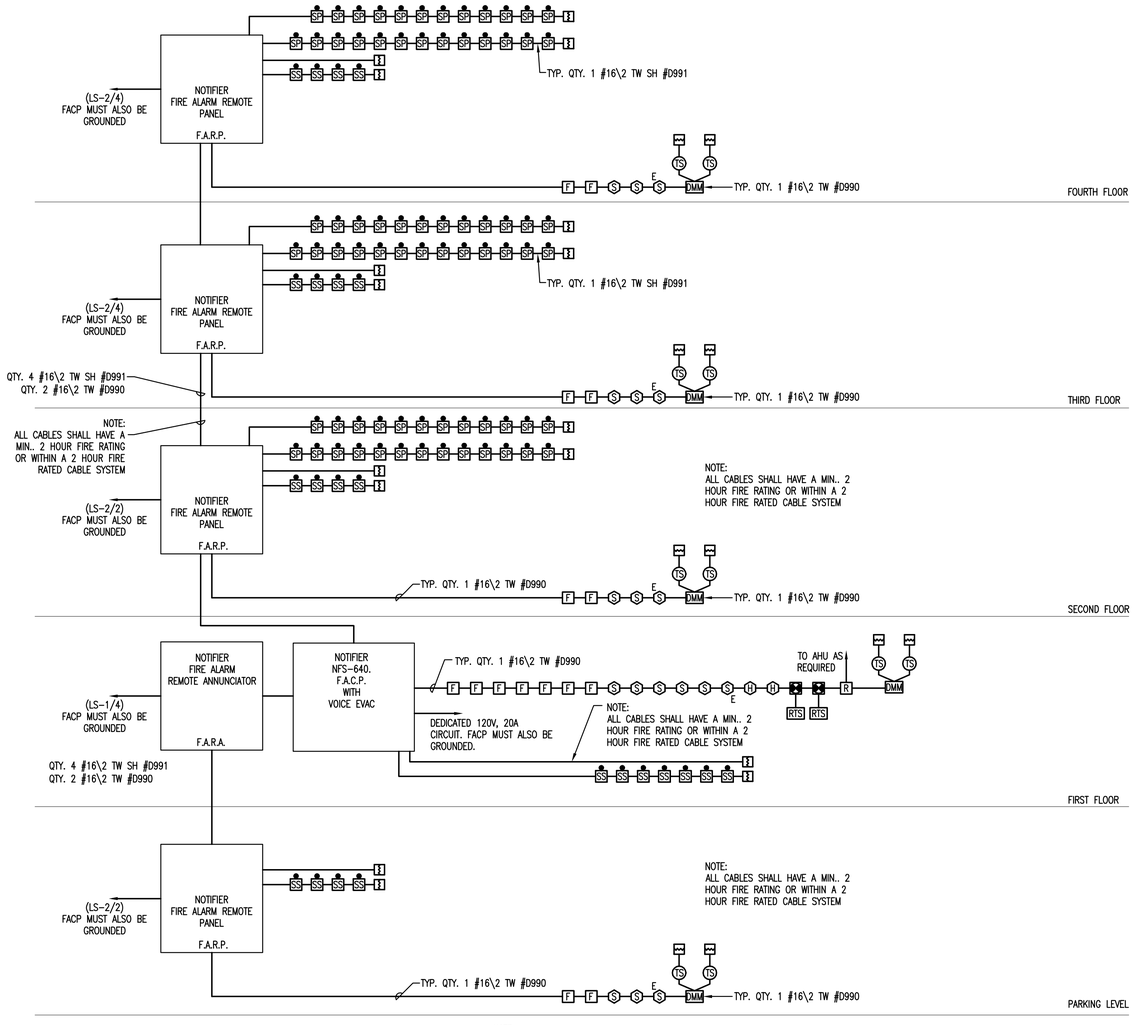

NOTE:

1. ELECTRICAL CONTRACTOR SHALL SUBMIT FINAL DESIGN DRAWINGS TO FIRE ALARM MANUFACTURER FOR COORDINATION OF DEVICE TYPES AND QUANTITIES.

1 **FIRE ALARM RISER DIAGRAM**
SCALE: NONE

Washington Village Phase 1

20 Day Street Building B

Norwalk, CT

Trinity Washington Village Limited Partnership
&
the Norwalk Housing Authority

E-ICON ARCHITECTURE
101 SUMMER ST BOSTON MA 02110
617-451-3333 www.iconarch.com

CONSULTANT

CENTEK engineering
Centered on Solutions ℠
www.CentekEng.com
(203) 488-0580
(203) 488-8587 Fax
63-2 North Branford Road, Branford, CT 06405

STAMP



KEYPLAN

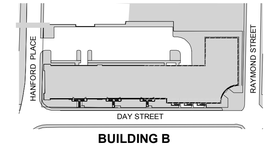

MARK	DATE	DESCRIPTION
	09-15-2014	PERMIT/ PRICING
	06-13-2014	PRICING
	11-18-2013	40% CHFA
	09-19-2013	CAM/ SPECIAL PERMIT

PROJECT NO.:	21222/CENTEK #13232.02
DRAWN BY:	TJB
CHECKED BY:	CKD

SHEET TITLE

FIRE ALARM RISER DIAGRAM

E-405

J:\Jobs\13232.02.ME\ELEC\E-405.dwg Sep 17, 2014 - 10:16pm tgk

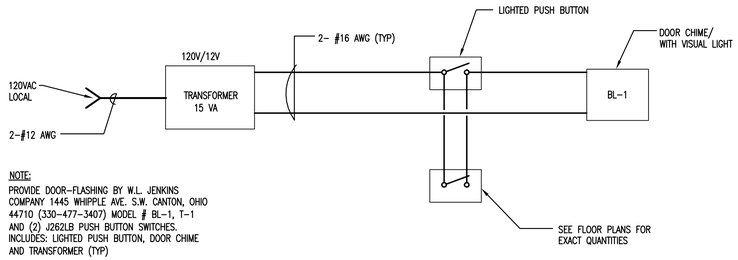

NOTE:

PROVIDE DOOR-FLASHING BY W.L. JENKINS COMPANY 1445 WHIPPLE AVE. S.W. CANTON, OHIO 44710 (330-477-3407) MODEL # BL-1, T-1 AND (2) J262LB PUSH BUTTON SWITCHES. INCLUDES: LIGHTED PUSH BUTTON, DOOR CHIME AND TRANSFORMER (TYP)

2 DOOR CHIME SCHEMATIC (HANDICAPPED UNITS)

SCALE: N.T.S.

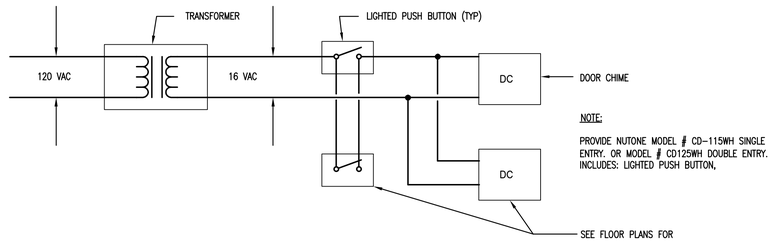

NOTE:

PROVIDE NUTONE MODEL # CD-115WH SINGLE ENTRY. OR MODEL # CD125WH DOUBLE ENTRY. INCLUDES: LIGHTED PUSH BUTTON,

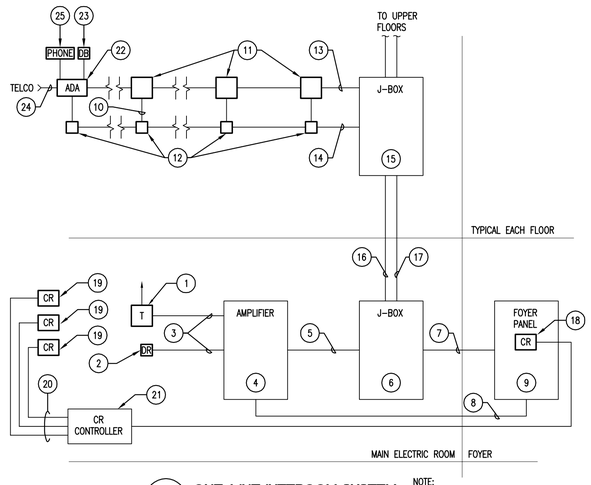

4 ONE-LINE INTERCOM SYSTEM

SCALE: N.T.S.

NOTE:

1. COORDINATE WITH MANUFACTURER FOR MOST CURRENT INSTALLATION SPECIFICATIONS.

INTERCOM SYSTEM NOTES (DESIGN BASED ON AIPHONE GT SERIES WITH VIDEO):

1. 16 VA TRANSFORMER. MOUNT TO JUNCTION BOX IN ELECTRIC ROOM. CONNECT TO POWER SOURCE AS SPECIFIED ON POWER PLAN.
2. DOOR RELEASE. INSTALL PER MANUFACTURER'S SPECIFICATIONS.
3. CONDUIT AND CONDUCTORS AS REQUIRED BY MANUFACTURER.
4. SYSTEM AMPLIFIER.
5. COMMON WIRES IN 3/4 CONDUIT FROM JUNCTION BOX IN MAIN ELECTRIC ROOM TO SYSTEM AMPLIFIER.
6. JUNCTION BOX IN MAIN ELECTRIC ROOM FOR ROUTING OF CONDUIT AND CONDUCTORS TO TENANT UNITS ON UPPER FLOORS. JUNCTION BOX SIZED AS REQUIRED.
7. APARTMENT STATION ADDRESS WIRES IN CONDUIT TO FOYER PANEL. SIZE CONDUIT AS REQUIRED TO ACCOMMODATE ALL WIRES, MIN 2-1/2".
8. 1" CONDUIT FROM FOYER PANEL TO AMPLIFIER WITH CONTROL WIRES AS REQUIRED.
9. ACS FLUSH MOUNTED VANDAL PROOF LOBBY INTERCOM PANEL CUSTOM SIZED TO ACCOMMODATE EXACT NUMBER OF APARTMENTS PLUS MANAGEMENT OFFICE. PANEL SHALL BE PROVIDED WITH POSTAL SWITCH, PROXIMITY CHIP (KEY FOB) READERS.
10. SELECTIVE ADDRESS WIRE IN CONDUIT FROM EACH APARTMENT STATION TO JUNCTION BOX IN CORRIDOR CEILING.
11. ACS-17M APARTMENT STATION. (TYPICAL EACH APARTMENT AND MANAGEMENT OFFICE)
12. JUNCTION BOX IN CORRIDOR CEILING OUTSIDE EACH APARTMENT, SIZED AS REQUIRED.
13. 3/4" C FOR 20AWG COMMON WIRES DAISY CHAINED TO EACH APARTMENT UNIT ON FLOOR.
14. 3/4" C FOR 20AWG ADDRESS WIRES IN CORRIDOR CEILING.
15. MAIN JUNCTION BOX IN ELECTRIC ROOM ON EACH TENANT FLOOR FOR INTERCOM SYSTEM WIRES. SIZE BOX AS REQUIRED.
16. 3/4" C FOR COMMON WIRES BETWEEN FLOORS.
17. CONDUIT FOR ADDRESS WIRES BETWEEN JUNCTION BOXES ON EACH FLOOR. SIZE CONDUIT BETWEEN FLOOR JUNCTION BOXES AS REQUIRED TO ACCOMMODATE THE AMOUNT OF ADDRESS WIRES AT EACH LOCATION.
18. CARD/FOB READER LOCATED ON FOYER PANEL.
19. CARD/FOB READER LOCATED AS SPECIFIED ON PLANS.
20. 6 PAIR, CAT 5 CABLE. HOMERUN FROM EACH READER TO CONTROLLER. COORDINATE WITH MANUFACTURER FOR WIRING MORE THAN FOUR UNITS (IF REQUIRED)
21. CARD READER CONTROL UNIT. INSTALL IN MANAGEMENT OFFICE, CONNECTED TO 120V, 20A, RECEPTACLE. COORDINATE EXACT PLACEMENT WITH ARCHITECT AND TO ACCOMMODATE MAXIMUM 50' CABLE LENGTH FOR CONNECTION TO COMPUTER FOR PROGRAMMING.
22. ADA-121 AUDIO VISUAL ALERT SYSTEM. IN ALL APARTMENTS ACCESSIBLE FOR HEARING IMPAIRED.
23. DOORBELL DEVICE OUTSIDE APARTMENT DOOR.
24. INCOMING TELEPHONE LINE.
25. CONNECTION TO TELEPHONE DISTRIBUTION BLOCK.

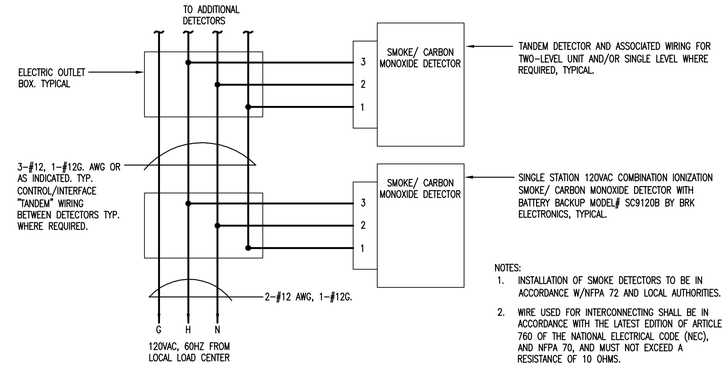

NOTES:

1. INSTALLATION OF SMOKE DETECTORS TO BE IN ACCORDANCE W/NFPA 72 AND LOCAL AUTHORITIES.
2. WIRE USED FOR INTERCONNECTING SHALL BE IN ACCORDANCE WITH THE LATEST EDITION OF ARTICLE 760 OF THE NATIONAL ELECTRICAL CODE (NEC), AND NFPA 70, AND MUST NOT EXCEED A RESISTANCE OF 10 OHMS.

1 SMOKE/CARBON MONOXIDE ALARM (TANDEM WIRING DIAGRAM)

SCALE: N.T.S.

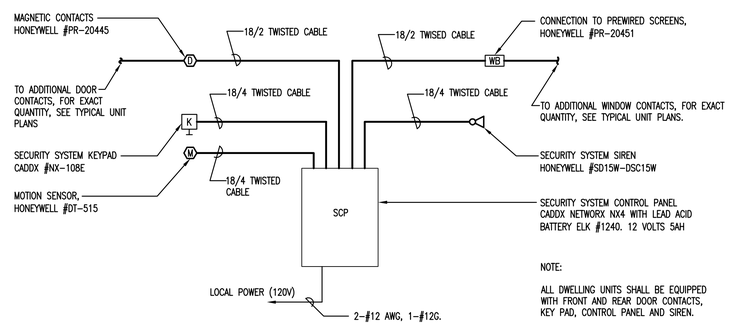

NOTE:

ALL DWELLING UNITS SHALL BE EQUIPPED WITH FRONT AND REAR DOOR CONTACTS, KEY PAD, CONTROL PANEL AND SIREN.

SCALE: N.T.S.

3 ONE-LINE UNIT SECURITY SYSTEM (TYP)

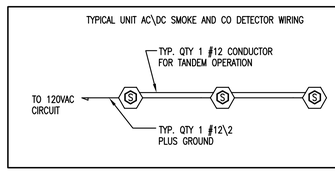

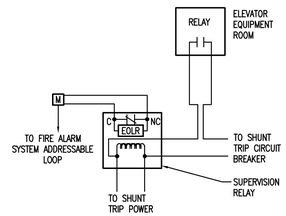

SHUNT TRIP SUPERVISION:

1. ALL FIRE ALARM SYSTEM WIRING MUST BE MONITORED FOR INTEGRITY. HEAT DETECTORS, WATER FLOW SWITCHES, OR PRESSURE SWITCHES MUST BE CONNECTED TO AND MONITORED BY THE FIRE ALARM SYSTEM.
2. SHUNT TRIP SYSTEMS REQUIRE A MONITOR MODULE TO ENSURE POWER IS PRESENT AT THE SHUNT TRIP BREAKER.
3. HEAT DETECTORS IN ELEVATOR MACHINE ROOMS, PITS AND TOPS OF SHAFTS SHALL BE WIRED IN PARALLEL TO SHUNT-TRIP UNITS ON ASSOCIATED ELEVATOR FUSED DISCONNECT SWITCH IN ELEVATOR MACHINE ROOMS. DETECTORS SHALL BE MOUNTED WITHIN 2 FEET OF ASSOCIATED SPRINKLER HEADS. THE SHUNT-TRIP SHALL NOT BE ACTIVATED UNTIL THE ELEVATOR CAR HAS RECALLED TO THE DESIGNATED LEVEL AND ITS DOORS OPENED. COORDINATE PROGRAMMING OF TIME DELAY WITH ELEVATOR CONTRACTOR TO ALLOW ELEVATOR TO RECALL PRIOR TO SHUNT-TRIP.

5 ELEVATOR SHUNT TRIP WIRING DETAIL

SCALE: N.T.S.

Washington Village Phase 1

20 Day Street Building B

Norwalk, CT

Trinity Washington Village Limited Partnership
&
the Norwalk Housing Authority

E-ICON ARCHITECTURE
101 SUMMER ST BOSTON MA 02110
617-451-3333 www.iconarch.com

CONSULTANT
CENTEK engineering
Centered on Solutions SM
www.CentekEng.com
(203) 488-0580
(203) 488-8587 Fax
63-2 North Branford Road, Branford, CT 06405

STAMP



KEYPLAN

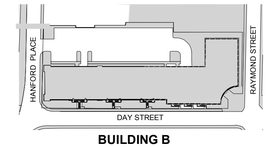

MARK	DATE	DESCRIPTION
	09-15-2014	PERMIT/ PRICING
	06-13-2014	PRICING
	11-18-2013	40% CHFA
	09-19-2013	CAM/ SPECIAL PERMIT

PROJECT NO.: 21222/CENTEK #13232.02
DRAWN BY: TJB
CHECKED BY: CKD

SHEET TITLE

ELECTRICAL RISER DIAGRAMS

E-406

J:\Jobs\13232022.ME\ELEC\E-406.dwg Sep 17, 2014 - 10:17pm tgk

VOLTAGE:	240/120	PHASE:	1	WIRE:	3			PANEL NO.		TP-1					
MAIN BUS:	200 AMPS							TOTAL WATTS, L1		24,868					
MAIN BREAKER:	200 A FRAME			200 A TRIP				TOTAL WATTS, L2		23,628		LOC:	PER PLAN		
MOUNTING:	FLUSH		NOTES:					TOTAL WATTS		48,496					
NOTES:	200A, 120/240, SINGLE PHASE, 3W, 65 KAIC, 42 POSITION, DOOR-IN-DOOR, 200A MCB, BOLT-ON BREAKERS. FRONT COVER/TRIM SHALL HAVE PAINTABLE FINISH AND BE FIELD PAINTED AN ARCH APPROVED COLOR.														

WATTS LOAD L1	WATTS LOAD L2	CKT.	AMPS	L1 Y	L2 Y	AMPS	CKT.	WATTS LOAD L1	WATTS LOAD L2	DIRECTORY
4,000		1	50/2P			20	2	400		REC/LTG - BATHROOM 1
	4,000	3				20	4		400	REC/LTG - BATHROOM 2
2,500		5	30/2P			20	6	900		REC - DINING
	2,500	7				20	8		350	LTG - KITCHEN/DINING
1,200		9	20			20	10	1,000		REC/LTG - FAMILY ROOM
	1,200	11	20			20	12		1,000	REC/LTG - FAMILY ROOM
1,200		13	20			20	14	1,200		REC/LTG - BEDROOM 2
	1,500	15	20			20	16		1,200	REC/LTG - BEDROOM 2
1,500		17	20			20	18	1,200		REC/LTG - BEDROOM 3
	1,260	19	20			20	20		1,200	REC/LTG - 2ND FLR
360		21	20			20	22	1,200		REC/LTG - BEDROOM 3
	1,500	23	20			20	24		250	SMOKE/CARBON/HEAT
1,200		25	20			20	26			SPARE
	500	27	20			20	28			SPARE
1,500		29	20			20	30			SPARE
	1,260	31	20			20	32			SPARE
1,350		33	20/2P			20	34			SPARE
	1,350	35				20	36			SPARE
1,350		37	20/2P			20	38			SPARE
	1,350	39				30/2P	40		2,808	CU-1
		41	20				42	2,808		SPARE

VOLTAGE:	120/208	PHASE:	3	WIRE:	4		TOTAL WATTS, L1	2,400	PANEL NO.	HP-1 (TYPICAL)
MAIN BUS:	225 AMPS						TOTAL WATTS, L2	2,200		
MAIN BREAKER:	200 A FRAME			200 A TRIP			TOTAL WATTS, L3	1,660	LOC:	MECH RM
MOUNTING:							TOTAL WATTS	6,260		
NOTES:	225A, 208Y/120V, 3P, 4W, 65 KAIC, 42 POSITION, DOOR-IN-DOOR, 225A MCB, BOLT-ON BREAKERS, COPPER BUS.									

WATTS LOAD L1	WATTS LOAD L2	WATTS LOAD L3	CKT.	AMPS	L1 Y	L2 Y	L3 Y	AMPS	CKT.	WATTS LOAD L1	WATTS LOAD L2	WATTS LOAD L3	DIRECTORY
500			1	20					2				SPACE
	1,200		3	20					4				SPACE
		1,200	5	20					6				SPACE
900			7	20					8				SPACE
	900		9	20					10				SPACE
		360	11	20					12				SPACE
1,000			13	20					14				SPACE
	100		15	20					16				SPACE
		100	17	20					18				SPACE
			19	20					20				SPACE
			21	20					22				SPACE
			23	20					24				SPACE
			25	20					26				SPACE
			27	20					28				SPACE
			29	20					30				SPACE
			31	20					32				SPACE
			33	20					34				SPACE
			35	20					36				SPACE
			37	20					38				SPACE
			39	20					40				SPACE
			41	20					42				SPACE

Washington Village Phase 1

20 Day Street Building B

Norwalk, CT

Trinity Washington Village Limited Partnership
&
the Norwalk Housing Authority

E-ICON ARCHITECTURE
101 SUMMER ST BOSTON MA 02110
617-451-3333 www.iconarch.com

CONSULTANT
CENTEK engineering
Centered on Solutions SM
www.CentekEng.com
(203) 488-0580
(203) 488-8587 Fax
63-2 North Branford Road, Branford, CT 06405

STAMP



KEYPLAN

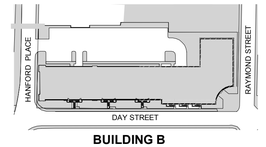

BUILDING B

N

MARK	DATE	DESCRIPTION
	09-15-2014	PERMIT/ PRICING
	06-13-2014	PRICING
	11-18-2013	40% CHFA
	09-19-2013	CAM/ SPECIAL PERMIT

PROJECT NO.: 21222/CENTEK #13232.02
DRAWN BY: TJB
CHECKED BY: CKD

SHEET TITLE

BUILDING B
ELECTRICAL
PANELBOARD
SCHEDULES

E-501

J:\Jobs\13232\02\ME\ELEC\E-501.dwg Sep 17, 2014 - 10:17pm tgk

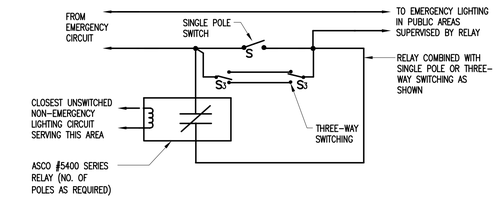

NOTE:

ALL SWITCH CONTROLLED EMERGENCY LIGHTING IN PUBLIC AREAS, EGRESS ROUTES AND ALL "NORMALLY-OFF" EMERGENCY LIGHTING SHALL BE CONTROLLED BY AN EMERGENCY SUPERVISORY RELAY TO AUTOMATICALLY ENERGIZE EMERGENCY LIGHTS WHEN NORMAL POWER FAILS.

1 DETAIL OF EMERGENCY SUPERVISORY BY-PASS-RELAY
N.T.S.

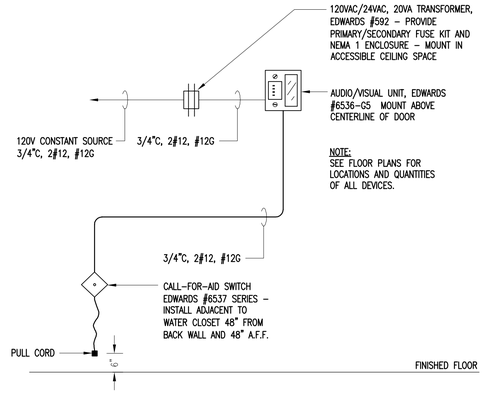

2 CALL-FOR-AID WIRING DETAIL
N.T.S.

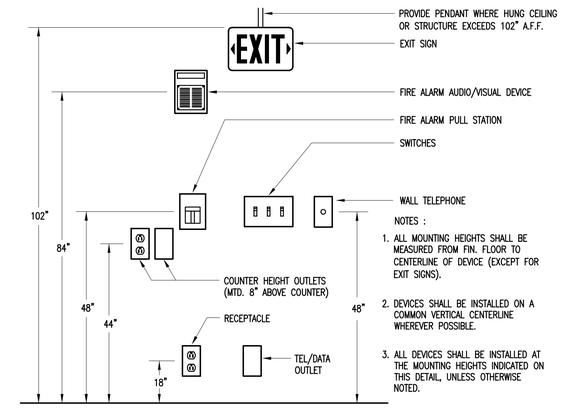

3 TYPICAL DEVICE MOUNTING HEIGHTS DETAIL
N.T.S.

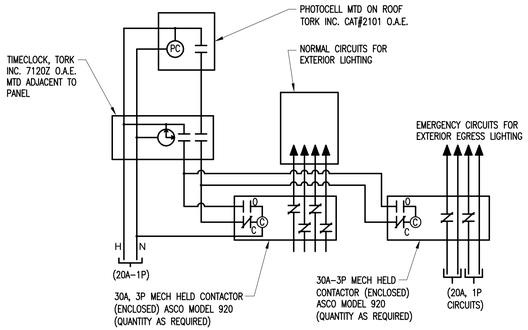

NOTES:

1. ALL WIRING FOR SITE LIGHTING SHALL BE #10 AWG, MINIMUM.
2. NORMAL CIRCUITS SHALL BE ON DIFFERENT CONTACTOR THAN EMERGENCY.

4 EXTERIOR SITE LIGHTING CONTROL WIRING DIAGRAM/EMERGENCY
N.T.S.

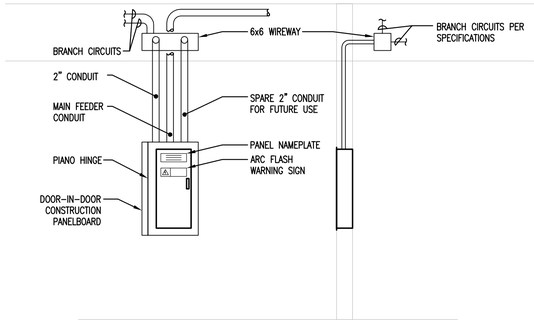

5 TYPICAL PANELBOARD DETAIL
N.T.S.

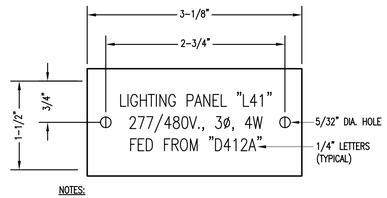

NOTES:

1. REFER TO SPECIFICATIONS FOR ADDITIONAL NAMEPLATE REQUIREMENTS.
2. NAMEPLATE TO BE 1/16" WHITE PLASTIC WITH BLACK CENTER LAMINATION. FACE TO BE WHITE, ENGRAVED LETTERS TO BE BLACK.
3. SECURE NAMEPLATE TO SURFACES WITH (2) FLAT HEAD BRASS SCREWS.

6 DETAIL OF TYPICAL NAMEPLATE
N.T.S.

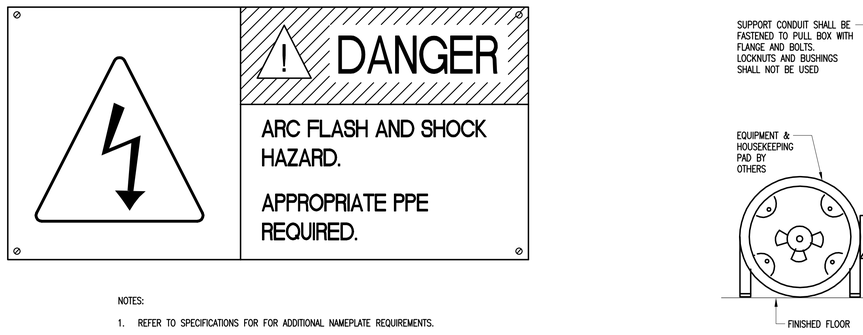

NOTES:

1. REFER TO SPECIFICATIONS FOR FOR ADDITIONAL NAMEPLATE REQUIREMENTS.
2. PROVIDE WARNING LABEL ON THE FOLLOWING HOUSE DISTRIBUTION EQUIPMENT: ALL SWITCHBOARDS, DISTRIBUTION PANELS, PANELBOARDS IN ACCORDANCE WITH NEC 110.16.

7 DETAIL OF TYPICAL FLASH PROTECTION WARNING SIGN
N.T.S.

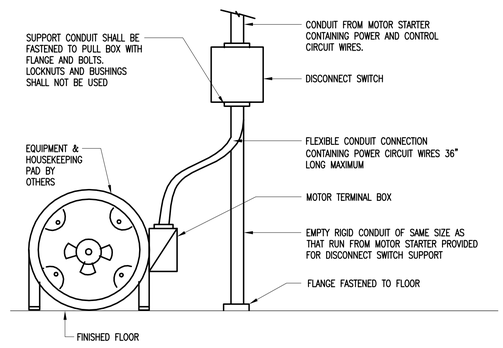

8 DETAIL OF MOTOR DISCONNECT SWITCH MOUNTING
N.T.S.

Washington Village Phase 1

20 Day Street Building B

Norwalk, CT

Trinity Washington Village Limited Partnership
&
the Norwalk Housing Authority

E-ICON ARCHITECTURE
101 SUMMER ST BOSTON MA 02110
617-451-3333 www.iconarch.com

CONSULTANT
CENTEK engineering
Centered on Solutions SM
www.CentekEng.com
(203) 488-0580
(203) 488-8587 Fax
63-2 North Branford Road, Branford, CT 06405

STAMP



KEYPLAN

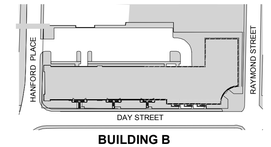

BUILDING B

N

MARK	DATE	DESCRIPTION
	09-15-2014	PERMIT/ PRICING
	06-13-2014	PRICING
	11-18-2013	40% CHFA
	09-19-2013	CAM/ SPECIAL PERMIT

PROJECT NO.: 21222/CENTEK #13232.02
DRAWN BY: TJB
CHECKED BY: CKD

SHEET TITLE

ELECTRICAL DETAILS

E-601

J:\Jobs\13232OZ.ME\ELEC\E-601.dwg Sep 17, 2014 - 10:18pm tgk

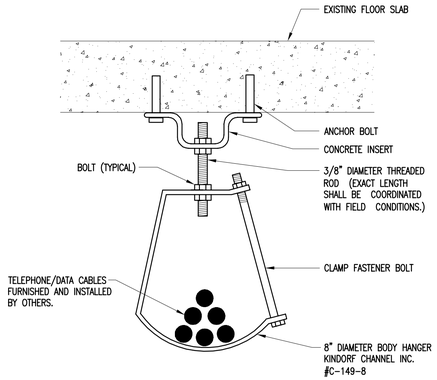

1 **CABLE HOOK SUPPORT SYSTEM**
N.T.S.

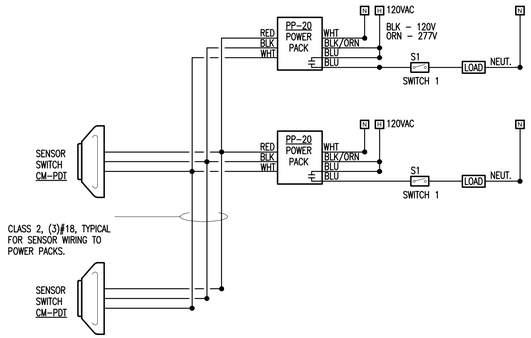

NOTE:

EXACT QUANTITY OF DEVICES MAY DIFFER FROM THIS DETAIL. CONTRACTOR SHALL PROVIDE ACTUAL QUANTITY REQUIRED. REFER TO LIGHTING FLOOR PLAN. COORDINATE WITH MANUFACTURERS WIRING DIAGRAMS.

2 **TYPICAL LIGHTING CONTROL SCHEMATIC**
N.T.S.

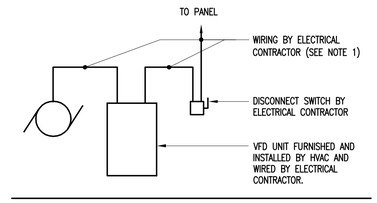

NOTE:

1. REFER TO MOTOR WIRING SCHEDULE FOR WIRE AND CONDUIT SIZE REQUIREMENTS FOR EACH FAN MOTOR, UNLESS OTHERWISE NOTED ON POWER PLAN. COORDINATE WITH MANUFACTURERS SPECIFICATIONS.

3 **VFD UNIT WIRING SCHEMATIC**
N.T.S.

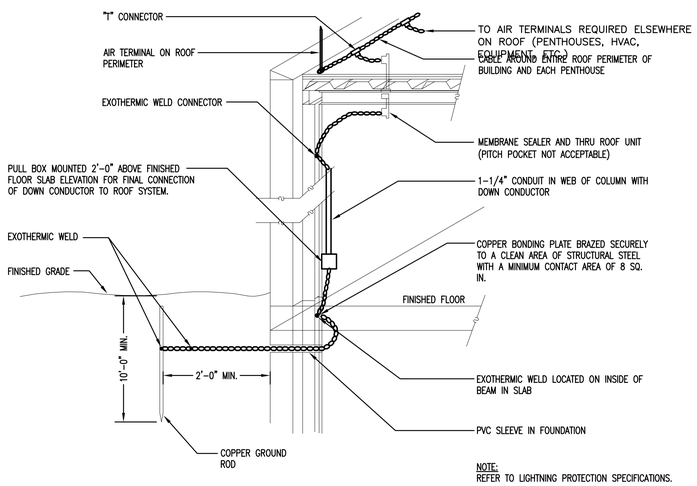

NOTE:
REFER TO LIGHTNING PROTECTION SPECIFICATIONS.

4 **LIGHTNING PROTECTION DETAIL**
N.T.S.

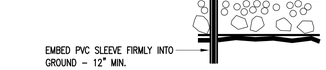

5 **SLEEVE DETAIL**
N.T.S.



6 **TYPICAL GROUND BAR DETAIL**
N.T.S.

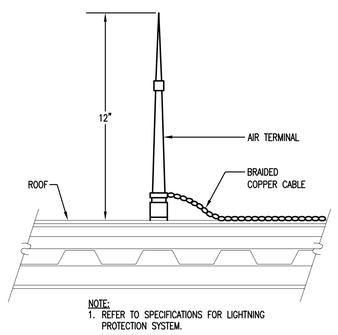

NOTE:
1. REFER TO SPECIFICATIONS FOR LIGHTNING PROTECTION SYSTEM.

7 **ROOF MOUNTED AIR TERMINAL DETAIL**
N.T.S.

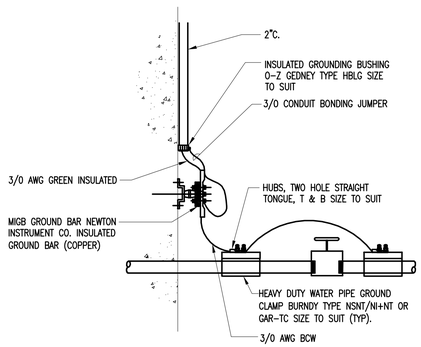

8 **WATER MAIN GROUNDING DETAIL**
N.T.S.

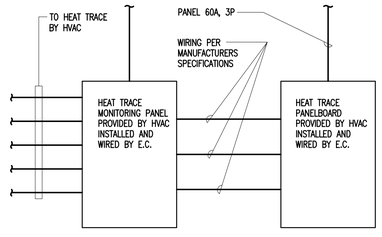

9 **HEAT TRACE DETAIL**
N.T.S.

Washington Village Phase 1

20 Day Street Building B

Norwalk, CT

Trinity Washington Village Limited Partnership
&
the Norwalk Housing Authority

E-ICON ARCHITECTURE
101 SUMMER ST BOSTON MA 02110
617-451-3333 www.iconarch.com

CONSULTANT
CENTEK engineering
Centered on Solutions ℠
www.CentekEng.com
(203) 488-0580
(203) 488-8587 Fax
63-2 North Branford Road, Branford, CT 06405

STAMP

KEYPLAN

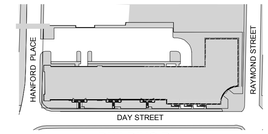

BUILDING B

N

MARK	DATE	DESCRIPTION
	09-15-2014	PERMIT/ PRICING
	06-13-2014	PRICING
	11-18-2013	40% CHFA
	09-19-2013	CAM/ SPECIAL PERMIT

PROJECT NO.: 21222/CENTEK #13232.02
DRAWN BY: TJB
CHECKED BY: CKD

SHEET TITLE

ELECTRICAL DETAILS

E-602

J:\Jobs\13232012.ME\ELEC\E-602.dwg Sep 17, 2014 - 10:18pm tgk

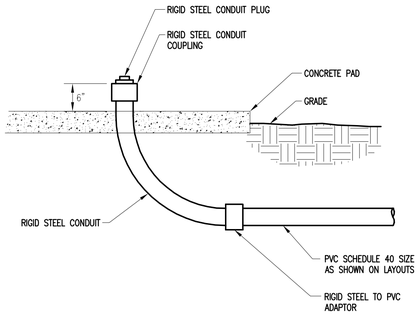

1 UNDERGROUND CONDUIT STUB-UP DETAIL
N.T.S.

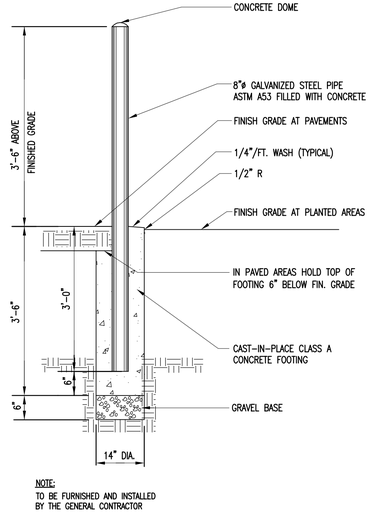

NOTE:
TO BE FURNISHED AND INSTALLED BY THE GENERAL CONTRACTOR

2 STEEL PIPE BOLLARD - CONCRETE FILLED
N.T.S.

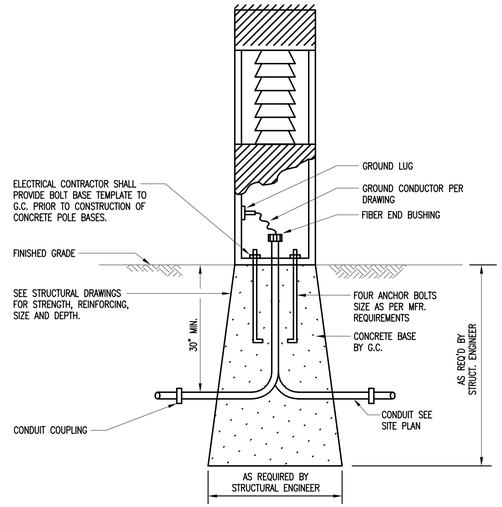

3 BOLLARD BASE DETAIL
N.T.S.

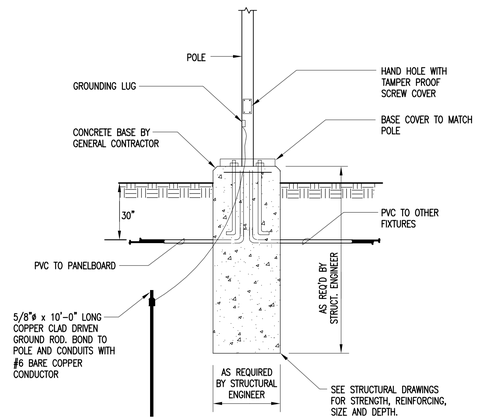

NOTE:

1. COORDINATE ANCHOR BOLT SIZE, QUANTITY AND LOCATION WITH MANUFACTURER.
2. PROVIDE AND INSTALL INLINE FUSES WITH BREAK– AWAY FUSE HOLDER SIZE BASED ON FIXTURE TYPE AND QUANTITY.
3. CONDUCTORS FROM LOAD SIDE OF POLE INLINE FUSES TO LUMINAIRE TO BE #10 AWG UNLESS OTHERWISE NOTED.

4 LIGHT POLE WIRING DETAIL
N.T.S.

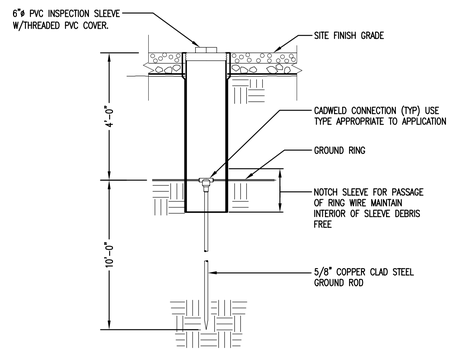

5 PVC INSPECTION WELL DETAIL
N.T.S.

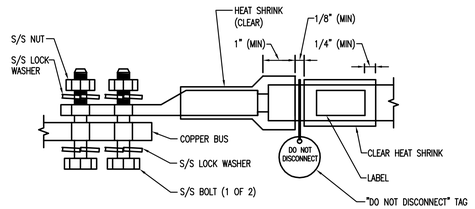

NOTES:

1. ALL HARDWARE 18–8 STAINLESS STEEL INCLUDING LOCK WASHERS, COAT ALL SURFACES WITH ANTI OXIDANT BEFORE MATING.
2. FOR GROUND BOND TO STEEL ONLY: INSERT A DRAGON TOOTH WASHER BETWEEN LUG AND STEEL, COAT ALL SURFACES WITH ANTI OXIDANT.

6 GENERAL LUG DETAIL
N.T.S.

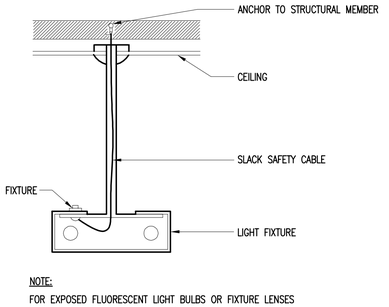

NOTE:
FOR EXPOSED FLUORESCENT LIGHT BULBS OR FIXTURE LENSES SUBJECT TO FALLING, SECURE IN PLACE WITH 2 WIRES THAT WRAP BENEATH THE LENS OR BULB AND ATTACH SECURELY TO THE FIXTURE.

SAFETY WIRE FOR PENDANT LIGHT FIXTURE

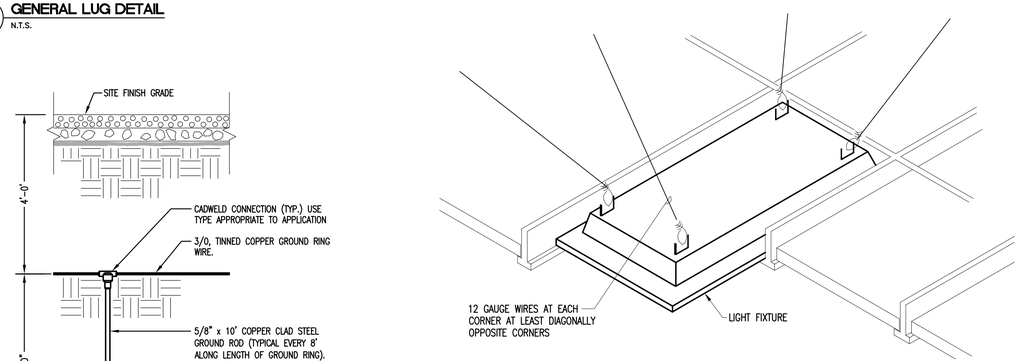

NOTE:

1. WHERE ROCK IS ENCOUNTERED ROCK SHALL BE DRILLED, FILLED WITH CONDUCTIVE SOIL, AND RODS INSTALLED TO FULL DEPTH.
2. GROUND RODS SHALL BE INSTALLED IN ACCORDANCE WITH NEC 2005, ARTICLE 250.

7 GROUND ROD AND RING DETAIL
N.T.S.

8 SEISMIC SAFETY WIRES FOR LIGHT FIXTURES
N.T.S.

Washington Village Phase 1

20 Day Street Building B

Norwalk, CT

Trinity Washington Village Limited Partnership
&
the Norwalk Housing Authority

E-ICON ARCHITECTURE
101 SUMMER ST BOSTON MA 02110
617-451-3333 www.iconarch.com

CONSULTANT
CENTEK engineering
Centered on Solutions ℠
www.CentekEng.com
(203) 488-0580
(203) 488-8587 Fax
63-2 North Branford Road, Branford, CT 06405

STAMP



KEYPLAN

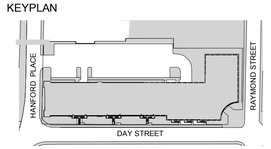

BUILDING B

N

MARK	DATE	DESCRIPTION
	09-15-2014	PERMIT/ PRICING
	06-13-2014	PRICING
	11-18-2013	40% CHFA
	09-19-2013	CAM/ SPECIAL PERMIT

PROJECT NO.: 21222/CENTEK #13232.02
DRAWN BY: TJB
CHECKED BY: CKD

SHEET TITLE

ELECTRICAL DETAILS

E-603

J:\jobs\1323202.ME\ELEC\E-603.dwg Sep 17, 2014 – 10:19pm tgk